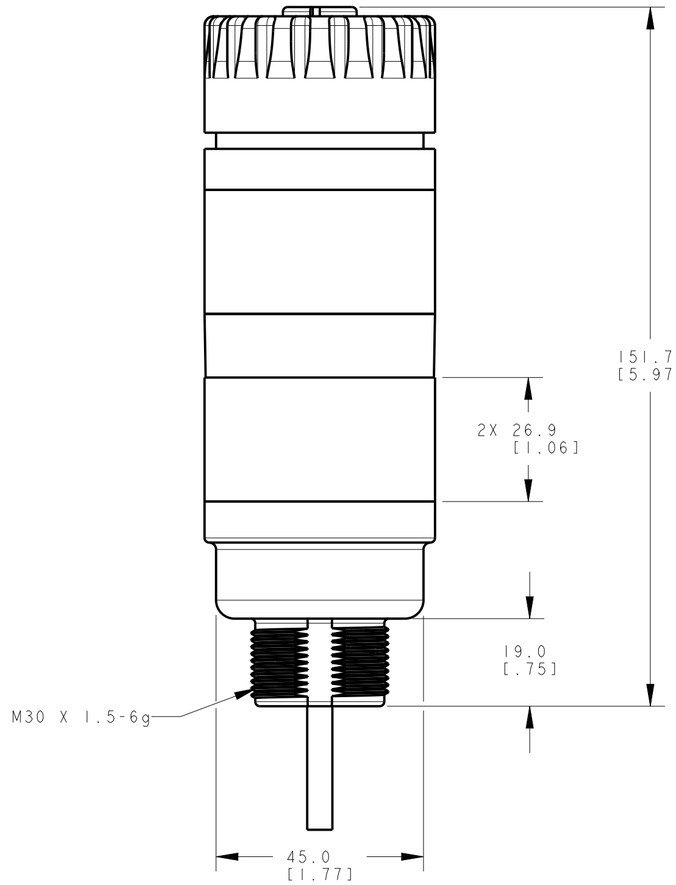

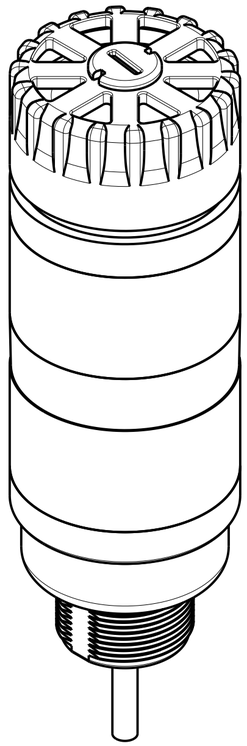

ISOMETRIC VIEW
SCALE 1:1

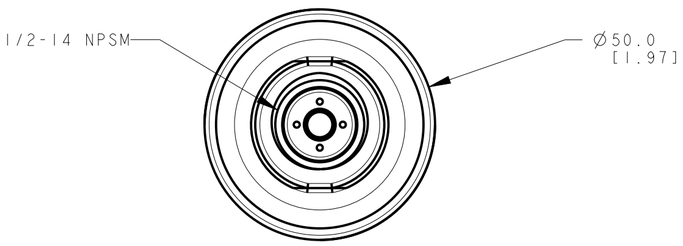

2 HEIGHT WITH TOP UNSCREWED APPROXIMATELY 3.5mm TO ALLOW SOUND TO ESCAPE.

NOTES:
1. ALL DIMENSIONS ARE MILLIMETERS [INCHES] UNLESS OTHERWISE NOTED.
2. REFER TO "www.bannerengineering.com" FOR ADDITIONAL DATA AND SPECIFICATIONS.

This drawing is the property of BANNER ENGINEERING CORP. Any use or reproduction, in any form, without prior written permission of Banner is prohibited.
© Banner Engineering Corp.

THIRD ANGLE PROJECTION

BANNER ENGINEERING CORP.
www.bannerengineering.com

TITLE
TL50 2-STACK CABLE AUDIBLE

SIZE	DRAWING NO.	REV.
C	145182	A
SCALE 1:1	SHEET 1 OF 1	

CREO

ПРОМЭЛЕКТРОНИКА/ sales@prom-elec.com