ED1G Grip-Style Enabling Device Instruction Manual

ED1G Grip-Style Enabling Devices

Three-position switches for enabling and hold-to-run applications

Standard enabling switch (left) and enabling switch with momentary pushbutton



- Three-position functionality (OFF-ON-OFF) as required for manual control of a machine
- Provides safety function when user either squeezes or releases the handlegrip switch
- Ergonomic design with a detented enable position (position 2)
- Terminal 1-2 and 3-4 contacts will not re-close when released from fully squeezed (position 3)
- Ideally suited for use as an enabling device for robotic cells
- Optional momentary pushbutton switch (depending on model) that can provide hold-to-run, reset, or jogging/inching functions
- Built-in strain relief and M20x1.5 conduit connection
- Meets IP65 or IP66, depending on model
- ⧈ Insulated device (IEC 60947-5-1) on all models
- Design meets or exceeds:
  - ANSI RIA R15.06 and ISO 10218 Robot safety standard
  - ANSI B11.19 Performance Criteria for Safeguards
  - NFPA 79 and IEC 60204-1 Electrical Requirements for Industrial Machines

WARNING:

- **Not a safeguarding device**
- Failure to follow these instructions could result in serious injury or death.
- This device is not considered a safeguarding device because it requires an overt action by an individual to stop machine motion or hazards. A safeguarding device limits or eliminates an individual's exposure to a hazard without action by the individual or others. This device cannot be substituted for required safeguarding. Refer to the applicable standards to determine those requirements.

ED1G Models

Model	Contact Configuration	Additional Switch	Environmental Rating
ED1G-L21SM-1N	2 N.O. + 1 N.C. Aux.	—	IP66
ED1G-L21SMB-1N	2 N.O. + 1 N.C. Aux. + 1 N.O. momentary pushbutton	momentary pushbutton	IP65
ED1G-L20MB-1N	2 N.O. + 2 N.O. momentary pushbutton		

手握式使能开关 型号ED1G系列,标准GB/T 14048.5, 美国邦纳工程公司, 日本制造

Important . . . Read This Before Proceeding!

It is the responsibility of the machine designer, controls engineer, machine builder, machine operator, and/or maintenance personnel or electrician to apply and maintain this device in full compliance with all applicable regulations and standards. The device can provide the required safeguarding function only if it is properly installed, properly operated, and properly maintained. This manual attempts to provide complete installation, operation, and maintenance instructions. *Reading the manual in its entirety is highly recommended to ensure proper understanding of the operation, installation, and maintenance.* Please direct any questions regarding the application or use of the device to Banner Engineering Corp..

The user is responsible for satisfying all local, state, and national laws, rules, codes, and regulations relating to the use of this product and its application. Banner Engineering Corp. has made every effort to provide complete application, installation, operation, and maintenance instructions. Please contact a Banner Applications Engineer with any questions regarding this product.

Applicable Standards (List is Not All-Inclusive)

U.S. Application Standards

ANSI B11.0 Safety of Machinery, General Requirements, and Risk Assessment

ANSI B11.19 Performance Criteria for Safeguarding

NFPA 79 Electrical Standard for Industrial Machinery

© Banner Engineering Corp.

ПРОМЭЛЕКТРОНИКА/ sales@prom-elec.com

ANSI/PMMI B155.1 Package Machinery and Packaging-Related Converting Machinery — Safety Requirements

International/European Standards

EN ISO 12100 Safety of Machinery – Basic Concepts, General Principles for Design

EN 60204-1 Electrical Equipment of Machines Part 1: General Requirements

IEC 61508 Functional Safety of Electrical/Electronic/Programmable Electronic Safety-Related Systems

IEC 62061 Functional Safety of Safety-Related Electrical, Electronic and Programmable Control Systems

EN ISO 13849-1:2015 Safety-Related Parts of Control Systems

EN 13855 (EN 999) The Positioning of Protective Equipment in Respect to Approach Speeds of Parts of the Human Body

ISO 14121 (EN 1050) Principles of Risk Assessment

Sources of Standards and Regulations

OSHA Documents: www.osha.gov (Tel: 202-512-1800)

American National Standards Institute (ANSI): www.ansi.org (Tel: 212-642-4900)

Robotics Industries Association (RIA): www.robotics.org (Tel: 734-994-6088)

National Fire Protection Association (NFPA): www.nfpa.org (Tel: 800-344-3555)

NSSN National Resource for Global Standards: www.nssn.org (Tel: 212-642-4980)

IHS Standards Store: www.global.ihs.com (Tel: 303-397-7956, 800-854-7179)

Document Center: www.document-center.com/home.cfm (Tel: 650-591-7600)

ED1G Overview

An enabling device is a manually operated control device which, when continuously activated and used in conjunction with a separate actuating (start) control, will allow the machine to function in manual operating mode (for example: inch/jog, slow speed, not automatic/production mode). **The enabling device *permits* (that is, enables) the machine to run, *but does not start the cycle;* a separate signal is needed to start the hazardous motion.** Sometimes called the "live man pendant," the enabling device must initiate an immediate stop of the hazard when released or fully squeezed by the operator.

In operation, the operator holds the three-position switch and presses lightly but firmly to enable the machine to run (position 2). In position 1, the switch is not activated, and in position 3, the switch is pressed beyond the enable position. In positions 1 and 3, the switch opens contacts 1-2 and 3-4, which removes power from the machine control, stopping the machine. Releasing the switch from position 3 to position 1 will not reclose the safety outputs until the switch is actuated from position 1 to position 2.

Models with the momentary switch may be used to control a machine function, such as an inch/jog button, or a hold-to-run control. Hold-to-run control initiates and maintains machine function only as long as the manual control (actuator) is actuated.

For hold-to-run applications, both the three-position switch and the normally open momentary switch must be continually engaged to allow machine operation. If multiple individuals are exposed to the hazard, only a single individual can be in command of the hold-to-run control or other means of starting the machine function or cycle. **All individuals within the hazard area must be provided their own enabling device or otherwise be safeguarded.** Each enabling device must be concurrently operated before machine motion can be initiated.

The enabling device is not considered to be an emergency stop device, but if performing an emergency stop function or if interfaced with the emergency stop circuit, the installation must comply with NFPA 79, IEC 60204-1 or the relevant regulations/standards. Emergency stop device(s) must be continuously operable and readily accessible, and must not be muted or bypassed.

Only qualified and authorized personnel who have been trained in the use of the device, and hazards associated with the task requiring the use of the device, may be allowed to operate the enabling device. Safe work procedures must include, but are not limited to, the use of the device, the associated hazards, and the task requiring the use of the device.

The enabling device must control all hazards that can be accessed by the individual operating the device. Care must be taken that additional hazards that can be created by the machine's function are controlled and that the individual is aware of these additional hazards, for example: the actuation of the enabling switch and the hold-to-run command causes the movement of a workpiece that causes a part-position sensor to index another workpiece that may not be within the individual's field of view. This situation could result in the individual being struck by the indexing workpiece.

The means to return the machine to production mode must be located outside of, and out of reach from within, the hazardous area, and be guarded against unintended operation. In addition, the reset switch operator must have full view of the entire guarded area and verify that the area is clear of individuals during the reset procedure.

© Banner Engineering Corp. All rights reserved.

Contact status when grip switch is operated

Models ED1G-L21SM-1N and ED1G-L21SMB-1N

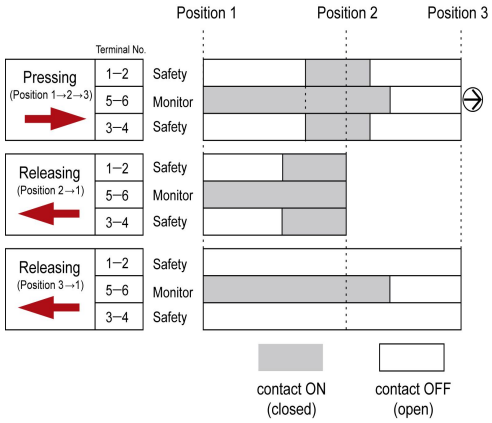

Model ED1G-L20MB-1N

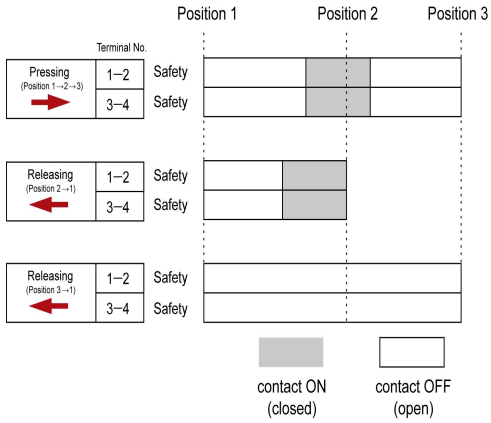

IMPORTANT: Qualified Personnel[1] Only qualified and authorized personnel who have been trained in the use of the device, and the hazards associated with the task that requires the use of the device, may operate the enabling device and must follow safe work procedures.

Bypassing Safeguards

Bypassing or overriding a safeguarding device is the manual interruption or suspension of the normal function of a safeguard under supervisory control. It is typically accomplished by selecting a bypass mode of operation using a key switch to facilitate machine setup, web alignment/adjustments, robot teach, and process troubleshooting.

Minimum requirements to bypass a safeguarding device include:[2]

- The bypass function must be temporary.
- The means of selecting or enabling the bypass must be capable of being supervised.
- Automatic machine operation must be prevented by limiting range of motion, speed, or power (for example, only used in inch, jog, or slow-speed modes). Bypass mode must not be used for production.
- Supplemental safeguarding must be provided. Personnel must not be exposed to hazards.
- The means of bypassing must be within full view of the safeguard to be bypassed.
- Initiation of motion should only be through a hold-to-run type of control.
- All emergency stops must remain active.
- The means of bypassing must be employed at the same level of reliability as the safeguard.
- Visual indication that the safeguarding device has been bypassed must be provided and be readily observable from the location of the safeguard.
- Personnel must be trained in the use of the safeguard and in the use of the bypass.
- Risk assessment and risk reduction (per the relevant standard) must be accomplished.
- The reset, actuation, clearing, or enabling of the safeguarding device must not initiate hazardous motion or create a hazardous situation.

WARNING:

- **Do not defeat the protective function of the enabling switch**
- Defeating the enabling switch creates an unsafe condition that could result in serious injury or death.
- Do not use tape, string or other means to keep the switch in position 2 without its being actuated by an individual.

WARNING:

- **Do not mute or bypass any emergency stop device**
- Muting or bypassing the safety outputs renders the emergency stop function ineffective.
- ANSI B11.19, NFPA 79 and IEC/EN 60204-1 require that the emergency stop function remains active at all times.

[1] A person who, by possession of a recognized degree or certificate of professional training, or who, by extensive knowledge, training and experience, has successfully demonstrated the ability to solve problems relating to the subject matter and work.
[2] This summary was derived from the following and other sources: NFPA 79, ANSI/RIA R15.06, ISO 13849-1 (EN954-1), IEC60204-1, and ANSI B11.19.

© Banner Engineering Corp. All rights reserved.

ED1G Lockout/Tagout

Read OSHA 29CFR 1910.147 *The control of hazardous energy (lockout/tagout)* or ANSI 2244.1 *Lockout/Tagout of Energy Sources* in machine maintenance and servicing situations in which the unexpected energization, start up, or release of stored energy could cause injury. Refer to these standards to ensure that bypassing a safeguarding device does not conflict with the requirements that are contained within the standards.

WARNING:
- **Limit the use of the bypass and/or override function**
- Failure to follow these instructions could result in serious injury or death.
- The bypass and/or override function is not intended for production purposes; use it only for temporary or intermittent actions, such as to clear the defined area of a safety light curtain if material becomes stuck. When bypass and/or override is used, the user must install and use it according to applicable standards (such as NFPA 79 or IEC/EN60204-1).

ED1G Mechanical Installation

Provision to secure the enabling device is recommended and may be required as part of ensuring that the operation of the enabling device can be supervised. The enabling device must not be affected by environmental conditions. See Specifications.

Install the enabling device so that it is protected against inadvertent operation (for example, accidental actuation by being bumped or leaned against). All mounting hardware is user-supplied.

ED1G Electrical Installation

WARNING:
- **Risk of electric shock**
- Use extreme caution to avoid electrical shock. Serious injury or death could result.
- Always disconnect power from the safety system (for example, device, module, interfacing, etc.), guarded machine, and/or the machine being controlled before making any connections or replacing any component. Lockout/tagout procedures might be required. Refer to OSHA 29CFR1910.147, ANSI Z244-1, or the applicable standard for controlling hazardous energy.
- Make no more connections to the device or system than are described in this manual. Electrical installation and wiring must be made by a Qualified Person[1] and must comply with the applicable electrical standards and wiring codes, such as the NEC (National Electrical Code), NFPA 79, or IEC 60204-1, and all applicable local standards and codes.

It is not possible to give exact wiring instructions for a Safety Module that interfaces to a multitude of machine control configurations. The following guidelines are general in nature.

Use a risk assessment to determine the method of interfacing this device. At a minimum, use the same level of safety performance (for example, control reliability, category 3 or 4) for the safeguard being bypassed.

Do not simply connect the contacts of the enabling switch across the contacts of a bypassed safeguarding device (for example, interlocked guard/gate, safety light screen) in a parallel connection. The enabling device(s) could be rendered ineffective by simply re-establishing the safeguarding device (closing the interlocked guard/gate, clearing the safety light screen).

At a minimum, the machine control must:
- Provide a means for supervising the selection of the enabling device to prevent unauthorized use or de-selection (disabling) while in use. Methods include key-operated controls, controls located under lockable covers, controls that require a password, or securing th enabling device(s) within lockable storage.
- Reduce risk to the individual using the enabling device by reducing machine performance (such as reducing speed, reducing power or force, or allowing only an incremental step-by-step operation, for example, inch/jog).
- Provide visual means to indicate the enabling device/function is active or has been selected.
- Allow only one actuating control to initiate a machine cycle or function when the enabling device is in use to prevent unexpected machine function.
- Require each selected enabling device to concurrently operate before a machine cycle or function can be initiated.
- Cause an immediate stop of the machine or function when the enabling device is released or fully squeezed. The enabling device(s) must be re-actuated for the actuating control to be allowed to re-initiate a machine cycle or function.

The means of returning the machine control to automatic or production mode must be located outside the hazard zone, such that it can not be reached from within the hazard zone, and the reset procedure cannot be allowed to occur until the hazard zone is clear of individuals and all safeguards are reestablished (in place and functioning).

[1] A person who, by possession of a recognized degree or certificate of professional training, or who, by extensive knowledge, training and experience, has successfully demonstrated the ability to solve problems relating to the subject matter and work.

© Banner Engineering Corp. All rights reserved.

Consideration for Reset Switches

The safeguarding device (or safety system) reset switch (if used) must be accessible only from outside, and in full view of, the hazardous area. Reset switches must also be out of reach from within the safeguarded space, and must be protected against unauthorized or inadvertent operation (for example, through the use of rings or guards). If any areas are not visible from the reset switch(es), additional means of safeguarding must be provided.

WARNING:

- **Reset routine required**
- Failure to prevent the machine from restarting without actuating the normal start command/device can create an unsafe condition that could result in serious injury or death.
- Do not allow the machine to restart without actuating the normal start command/device. Perform the reset routine after clearing the cause of a stop condition, as required by U.S. and international standards.

Connection of Multiple Switches

Multiple enabling devices connected to one safety module must be series connected (see wiring diagram and the following warning).

WARNING:

- **Connect two or more devices to the same safety module (controller) in series**
- Connecting devices in parallel defeats the switch contact monitoring ability of the module and creates an unsafe condition that could result in serious injury or death.
- Failure to test each device individually in this manner could result in undetected faults and create an unsafe condition that could result in serious injury or death.
- Connect the contacts of the corresponding pole of each switch in series. Never connect the contacts of multiple switches in parallel. Individually actuate (engage) each device, then release (or re-arm) and reset the safety module. This allows the module to check each switch and its wiring to detect faults. Perform this check during the prescribed checkouts.

Normally Open Momentary Pushbutton (on Some Models)

Models with the momentary switch option may be used to control a machine function, as an inch/jog button, or as a hold-to-run control.

Only one actuating control (for example, the pushbutton) can initiate the machine function while the enabling device(s) is in use. To prevent unexpected machine function, the machine control must disable all other actuating controls such that the individual operating the enabling device has exclusive control.

Hold-to-run control initiates and maintains machine functions only as long as the pushbutton is actuated; release of the pushbutton must initiate an immediate stopping command. For hold-to-run applications, both the three-position switch and the momentary N.O. switch must be continually engaged to allow machine operation. If multiple individuals are within the cell or exposed to the hazard, only a single individual can be in command of the hold-to-run control or the means to initiate machine operation.

Making the Connections: Accessing the Wiring Chamber

To ensure the highest level of reliability, connect both contacts to a monitoring device, such as a safety module.

Terminal assignments (dependent on model)

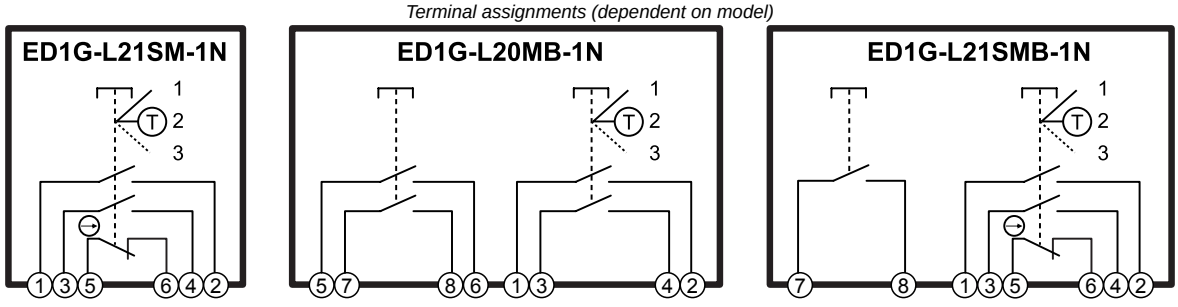

1. Remove the cover from the switch by loosening the three M4 Phillips-head screws on the back of the housing.
2. Detach the cable gland from the housing.
3. Route the cables through the supplied cable gland and into the wiring chamber.
4. Strip the wire as required and secure into the appropriate wiring terminals.

	Terminals 1 to 4	Terminals 5 to 8
Wire Length L1, L2	L1 = 35 mm	L2 = 30 mm

Continued on page 6

© Banner Engineering Corp. All rights reserved.

Continued from page 5

	Terminals 1 to 4	Terminals 5 to 8
Wire Stripping Length L3	L3 = 8 mm to 9 mm (or equivalent ferrule length)	

Wire lengths to terminal connections

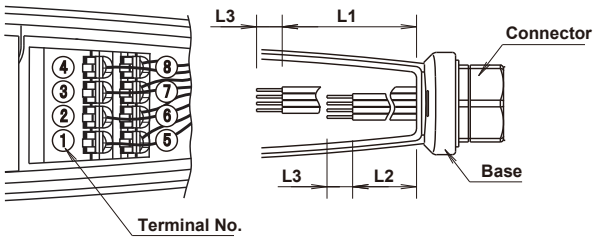

5. Replace the cover and secure with the three screws (torque: 1.1 N·m to 1.3 N·m).
6. Thread the cable gland onto the housing and manually tighten (torque: 3.7 N·m to 4.3 N·m).

NOTE:
- Applicable cordset/cable outside diameter when used with supplied cable gland: 7 mm to 13 mm.
- Applicable wire size in terminal: 0.2 mm² to 1.5 mm² (single wire).
- When using stranded wire, make sure that adjoining terminals are not short-circuited with protruding core wires. Use copper wire with a 60 °C to 75 °C rating only (UL508).

IMPORTANT: Clamp terminals are designed for one wire only. If more than one wire is connected to a terminal, a wire could loosen or become completely disconnected from the terminal, causing a short.
Use a stranded wire or a wire with an accompanying ferrule. Tinned wires are not recommended.

After inserting the wire into the terminal, tug the wire to make sure it is properly retained. If the wire is not retained, consider using a different wiring solution.

NOTE: Older units (pre-2022) have screw terminals instead of clamp terminals. The position number is the same.

ED1G Wiring Example for Gate and Speed Monitoring Applications

WARNING:
- **Properly install arc or transient suppressors**
- Failure to follow these instructions could result in serious injury or death.
- Install any suppressors as shown across the coils of the machine primary control elements. Do not install suppressors directly across the output contacts of the safety or interface module. In such a configuration, it is possible for suppressors to fail as a short circuit.

© Banner Engineering Corp. All rights reserved.

Wiring example for gate and speed monitoring applications

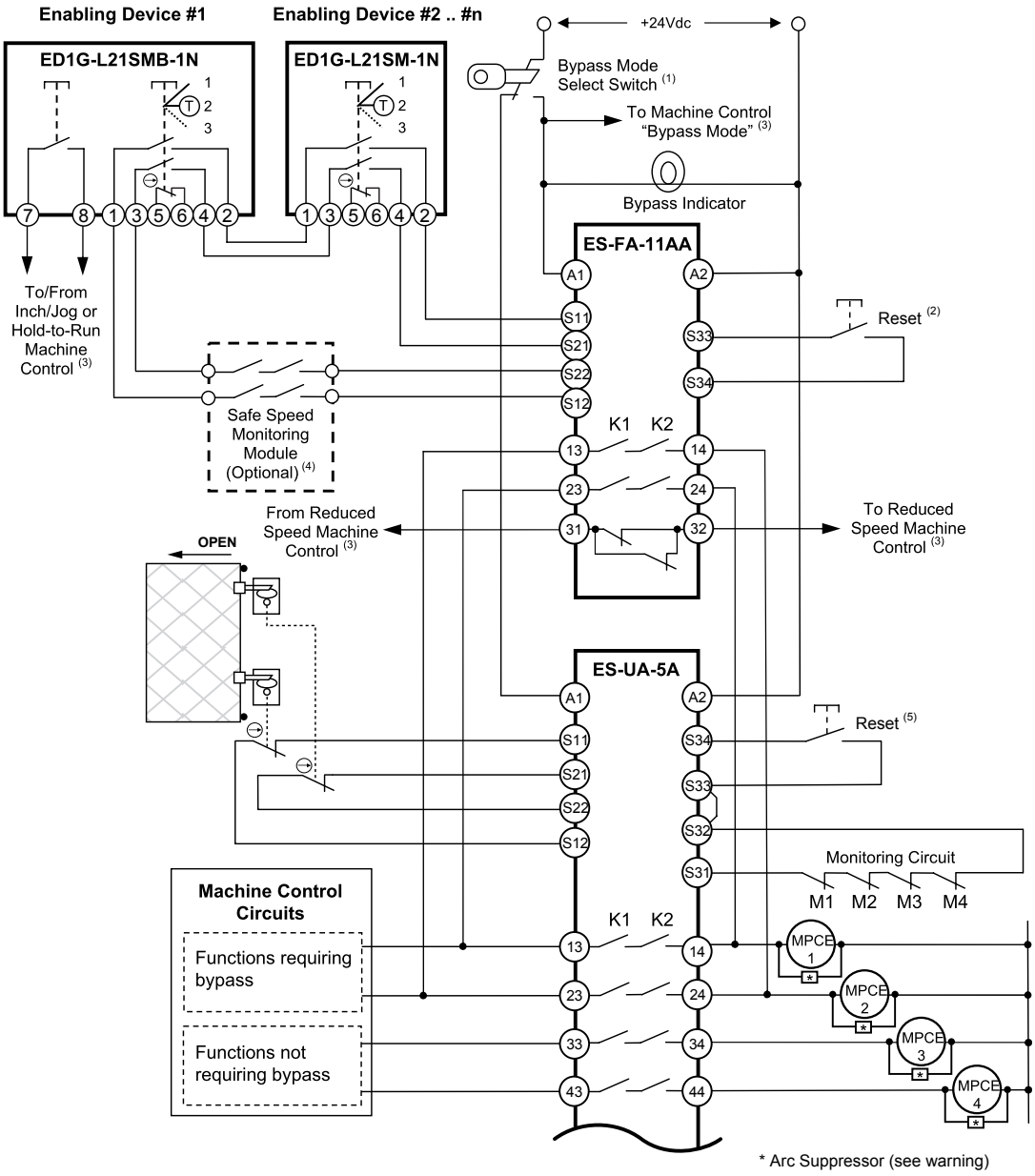

1. Selection of the enabling device must be capable of being supervised.
2. In this example, the safety module monitoring the enabling device(s) is configured for manual reset, requiring a separate action before the bypass can occur.
3. Several signals are used to allow the bypass of the safeguard, including:
   - The Bypass Mode Selector switch sends a signal to the machine control to enter a reduced performance mode (for example, inch/jog, slow speed, etc.),
   - The enabling switch (via the normally closed (NC) output of the ES-FA-11A safety module) enables the slow/reduced speed machine control function and bypasses the safeguard with the normally open (NO) outputs, and
   - The momentary normally open (NO) button on the enabling device initiates the machine function.
4. Additional logic, such as a safe speed / zero speed signal, may be required to ensure that the operator(s) are not exposed to hazards generated from automatic machine operation.
5. Multiple actions are required to return the machine to automatic or production mode, including closing the guard and resetting the guard-monitoring safety module.

© Banner Engineering Corp. All rights reserved.

Checkout Procedures

Banner Engineering highly recommends performing the System checkouts as described. However, a Qualified Person (or team) should evaluate these generic recommendations considering their specific application and determine the appropriate frequency of checkouts. This will generally be determined by a risk assessment, such as the one contained in ANSI B11.0. The result of the risk assessment will drive the frequency and content of the periodic checkout procedures and must be followed.

ED1G Initial and Daily Checks

Verify the functioning of the enabling device at initial installation (by a *qualified person*[1]), daily or before each use (by a *designated person*), and as part of the regular periodic checkout procedure listed below[2] to ensure proper operation.

1. Inspect the device for breakage or damage and the interconnect cabling for crushing, cuts, or wear.
2. Inspect the device for loosening or damage to the mounting hardware or means of storage.
3. With the enabling device selected (for example, bypass or maintenance mode, inch/jog) and the safeguard disabled (for example, interlock gate/guard open), verify that:
    - The bypass indicator illuminates, and
    - Hazardous function(s) can not be initiated when the enabling device is not actuated (position #1).
4. Actuate the enabling device (squeeze to position #2) and initiate hazardous machine function(s). Verify that the hazardous function ceases when the device is released (returned to position #1) or fully squeezed (position #3).
5. **If more than one enabling device is used, perform this procedure individually for EACH device.**

ED1G Periodic Checks

A *qualified person* [3] should check for the following on a periodic schedule determined by the user, based upon the severity of the operating environment and the frequency of switch actuations. At a minimum, this should take place once a year (lockout/tagout procedures for controlling hazardous energy may be required):

1. Inspect the wiring chamber for signs of contamination, deterioration, loose connections, or damage.
2. Inspect the sealing at the cable entry and all electrical wiring for continuity and damage.
3. Verify the wiring and installation conforms to the instructions in this document and there are no signs of tampering or defeat.
4. Perform the initial checkout.

See also the machine manufacturer's recommendations for additional instructions. **If any of these checks cannot be verified, do not attempt to use the enabling device until the defect or problem has been corrected.**

ED1G Specifications

Supply Voltage
250 V AC/DC

Impulse Withstand Voltage
3-position switch: 2.5 kV
Momentary pushbutton: 1.5 kV

Output Contact Ratings
See table below.

Rated Thermal Current (Ith):
2.5 A, for the following operating temperatures:
40 °C ≤ 50 °C: 2 A (4 contacts under load)
50 °C ≤ 60 °C: 1.5 A (3 contacts under load)

Contact Resistance
100 mΩ maximum

Shock Resistance
Operating extremes:150 m/s² (15 G)
Damage limits: 1,000 m/s² (100 G)

Direct Opening
(Terminals 5 and 6 models ED1G-L21SM-1N and ED1G-L21SMB-1N)
Actuating Force: 70 N minimum
Travel: 4.7 mm minimum

Date code format (U.S. Standard Format)
YYWWX: 2-digit year, 2-digit week, "X" internal code

Pollution Degree
3

Mechanical Life
Positions 1 & 2 only: 1,000,000 operations minimum
Positions 1, 2 & 3: 100,000 operations minimum
Operating frequency: 1,200 operations per hour maximum

Insulation Resistance
Live to dead metal parts: 100 MΩ minimum
Positive to negative live parts: 100 MΩ minimum

Recommended Wire/Cable Size
Wire: 0.2 mm² to 1.5 mm² (24 AWG to 16 AWG)
Cable: ø 7 mm to 13 mm
M20 conduit

Short Circuit Protection
250 V/10 A fast blow fuse (IEC 60127-1)
Conditional short circuit current: 50 A (250 V)

Vibration Resistance
Operating extremes: 5 Hz to 55 Hz, half amplitude 0.5 mm minimum
Damage limits: 16.7 Hz, half amplitude 1.5 mm minimum

---

[1] A *qualified person* possesses a recognized degree or certificate or has extensive knowledge, training, and experience to be able to solve problems relating to the safety switch installation.
[2] A *designated person* is identified in writing by the employer as being appropriately trained to perform a specified checkout procedure.
[3] A *qualified person* possesses a recognized degree or certificate or has extensive knowledge, training, and experience to be able to solve problems relating to the safety switch installation.

© Banner Engineering Corp. All rights reserved.

Electrical Life

100,000 operations minimum at rated load

B10d: 100,000 (EN ISO 13849-1 Annex C Table C.1)

Wire Connections

8 spring-clamp connections

0.2 mm² to 1.5 mm² solid wire; use an insulated ferrule when using stranded wire

Ferrule size: 1.77 mm × 1.5 mm maximum with a conductor length of 8 mm to 9 mm

Operating Conditions (indoor use only)

–10 °C to +60 °C (+14 °F to +140 °F) (no freezing)

45% to 85% relative humidity (no condensation)

Storage Temperature: –40 °C to +80 °C (–40 °F to +176 °F)

Construction

Polyamide housing and cable gland, NBR/PVC polyblend rubber grip switch boot; model **ED1G-L21SM-1N** meets IP66; other models meet IP65

Applicable Standards

Design Standards: EN/IEC 60947-5-1, EN/IEC 60947-5-8, JIS C8201-5-1, UL 508, CSA C22.2 No. 14, GS-ET-22

Application Standards: ISO 12100/EN ISO 12100, IEC 60204-1/ EN 60204-1, ISO 11161/EN ISO11161, ISO10218-1/ EN ISO10218-1, ANSI/RIA/ISO 10218-1, NFPA 79, ANSI/RIA R15.06, ANSI B11.19, ISO 13849-1/EN ISO 13849-1

Ratings approved by Safety Agencies

TÜV rating:

Three-Position Enabling Switch	AC-15 250 V/0.5 A	DC-13 125 V/0.1 A DC-13 30 V/ 0.7 A
Monitor Switch	AC-15 250 V/0.75 A	DC-13 125 V/0.22 A DC-13 30 V/2.3 A
Directives: Low Voltage Directive (2014/35/EU), Machinery Directive (2006/42/EC) Applicable EC Standards: EN 50947-5-1, GS-ET-22		

UL, c-UL rating:

Three-Position Enabling Switch	AC 250 V/0.5 A Pilot Duty	DC 125 V/0.1 A Pilot Duty DC 30 V/0.7 A Pilot Duty
Monitor Switch	AC 250 V/0.75 A Pilot Duty	—
Ambient Temperature: +40 °C Environmental Rating: Type 4X, Indoor use only This device has only been investigated for shock and fire to UL 508		

Certifications

Banner Engineering BV
Park Lane, Culliganlaan 2F bus 3
1831 Diegem, BELGIUM

Turck Banner LTD Blenheim House
Blenheim Court
Wickford, Essex SS11 8YT
GREAT BRITAIN

手握式使能开关 型号 ED1G 系列
标准 GB/T 14048.5
美国邦纳工程公司, 日本制造

Required Overcurrent Protection

WARNING: Electrical connections must be made by qualified personnel in accordance with local and national electrical codes and regulations.

Overcurrent protection is required to be provided by end product application per the supplied table.

Overcurrent protection may be provided with external fusing or via Current Limiting, Class 2 Power Supply.

Supply wiring leads < 24 AWG shall not be spliced.

For additional product support, go to www.bannerengineering.com.

Supply Wiring (AWG)	Required Overcurrent Protection (A)	Supply Wiring (AWG)	Required Overcurrent Protection (A)
20	5.0	26	1.0
22	3.0	28	0.8
24	1.0	30	0.5

ED1G Output Contact Ratings

Rated Insulation Voltage (UI)			**3-position Switch:** 250 V **Momentary Pushbutton:** 125 V		
Rated Thermal Current (Ith)			2.5 A		
Rated Voltage Ue			**30 V**	**125 V**	**250 V**
Rated Current (Ie) 3-position Switch Terminals 1-2 and 3-4	**AC**	Resistive load (AC-12)	—	1 A	0.5 A
		Inductive load (AC-15)	—	0.7 A	0.5 A
	DC	Resistive load (DC-12)	1 A	0.2 A	—
		Inductive load (DC-13)	0.7 A	0.1 A	—
Rated Current (Ie) Monitor Switch Terminal 5-6	**AC**	Resistive load (AC-12)	—	2 A	1 A
		Inductive load (AC-15)	—	1 A	0.5 A
	DC	Resistive load (DC-12)	2 A	0.4 A	0.2 A
		Inductive load (DC-13)	1 A	0.22 A	0.1 A

Continued on page 10

© Banner Engineering Corp. All rights reserved.

Continued from page 9

Rated Current (Ie) Momentary Pushbutton Switch Terminals 7-8 (Model ED1G-L21SMB-1N); 5-6 and 7-8 (Model ED1G-L20MB-1N)	**AC**	Resistive load (AC-12)	—	0.5 A	—
		Inductive load (AC-15)	—	0.3 A	—
	DC	Resistive load (DC-12)	1 A	0.2 A	—
		Inductive load (DC-13)	0.7 A	0.1 A	—

ED1G Dimensions

All measurements are listed in millimeters, unless noted otherwise.

Model ED1G-L21SM-1N

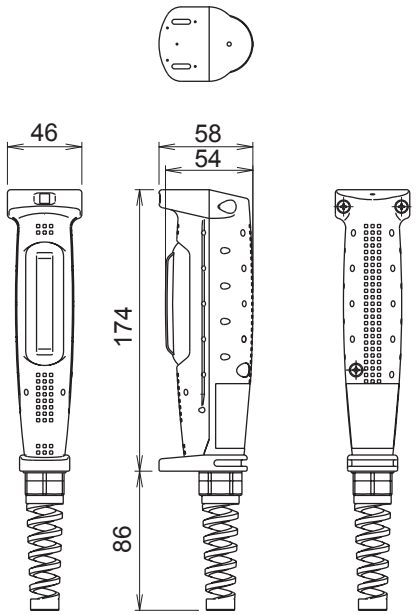

Models ED1G-L21SMB-1N and ED1G-L20MB-1N

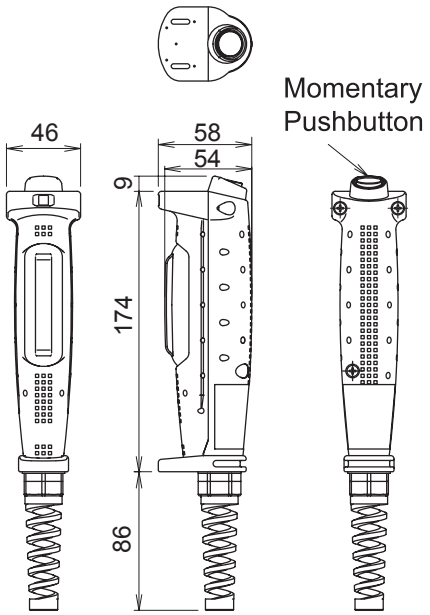

Accessories and Replacement Parts

ED1G Accessories

ED9Z-GH1 Right-angle bracket
- Right-angle bracket mounts directly to upright surface
- Holds enabling switch for easy access when needed
- All measurements in mm

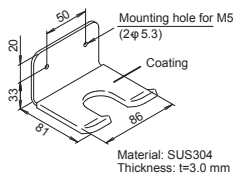

ED1G Replacement Parts

ED9Z-GBK1-1N NBR/PVC gray Polyblend boot
- Identical to original boot shipped with enabling device

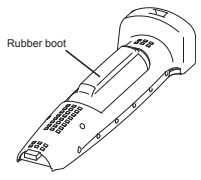

Banner Engineering Corp Limited Warranty

Banner Engineering Corp. warrants its products to be free from defects in material and workmanship for one year following the date of shipment. Banner Engineering Corp. will repair or replace, free of charge, any product of its manufacture which, at the time it is returned to the factory, is found to have been defective during the warranty period. This warranty does not cover damage or liability for misuse, abuse, or the improper application or installation of the Banner product.

© Banner Engineering Corp. All rights reserved.

THIS LIMITED WARRANTY IS EXCLUSIVE AND IN LIEU OF ALL OTHER WARRANTIES WHETHER EXPRESS OR IMPLIED (INCLUDING, WITHOUT LIMITATION, ANY WARRANTY OF MERCHANTABILITY OR FITNESS FOR A PARTICULAR PURPOSE), AND WHETHER ARISING UNDER COURSE OF PERFORMANCE, COURSE OF DEALING OR TRADE USAGE.

This Warranty is exclusive and limited to repair or, at the discretion of Banner Engineering Corp., replacement. **IN NO EVENT SHALL BANNER ENGINEERING CORP. BE LIABLE TO BUYER OR ANY OTHER PERSON OR ENTITY FOR ANY EXTRA COSTS, EXPENSES, LOSSES, LOSS OF PROFITS, OR ANY INCIDENTAL, CONSEQUENTIAL OR SPECIAL DAMAGES RESULTING FROM ANY PRODUCT DEFECT OR FROM THE USE OR INABILITY TO USE THE PRODUCT, WHETHER ARISING IN CONTRACT OR WARRANTY, STATUTE, TORT, STRICT LIABILITY, NEGLIGENCE, OR OTHERWISE.**

Banner Engineering Corp. reserves the right to change, modify or improve the design of the product without assuming any obligations or liabilities relating to any product previously manufactured by Banner Engineering Corp. Any misuse, abuse, or improper application or installation of this product or use of the product for personal protection applications when the product is identified as not intended for such purposes will void the product warranty. Any modifications to this product without prior express approval by Banner Engineering Corp will void the product warranties. All specifications published in this document are subject to change; Banner reserves the right to modify product specifications or update documentation at any time. Specifications and product information in English supersede that which is provided in any other language. For the most recent version of any documentation, refer to: www.bannerengineering.com.

For patent information, see www.bannerengineering.com/patents.

Repairs and Translations

Obtain assistance with product repairs by contacting your local Banner Engineering Corp distributor or by calling Banner directly at (763) 544-3164. Access literature translated into your native language on the Banner website at www.bannerengineering.com or contact Banner directly at (763) 544-3164.

Para reparaciones de productos, por favor contacte a su distribuidor local de Banner Engineering o llame a Banner directamente al 00 1 (763) 544-3164. Vea la literatura traducida en su idioma en el sitio web Banner en www.bannerengineering.com o comuníquese con Banner directamente al 00 1 (763) 544-3164.

Pour vous aider lors de la réparation de produits, contactez votre distributeur Banner local our appelez directement Banner au (763) 544-3164. La documentation traduite dans votre langue est disponible sur le site internet de Banner www.bannerengineering.com ou contactez directement Banner au (763) 544-3164.

请联系当地的 Banner Engineering Corp 经销商或直接致电 Banner +1 (763) 544-3164，以获得产品维修帮助。请访问邦纳网站 www.bannerengineering.com 或直接拨打 +1 (763) 544-3164 联系邦纳，获取翻译成您母语的资料。

EU/UK Declaration of Conformity (DoC)

Banner Engineering Corp. herewith declares that these products are in conformity with the provisions of the listed directives and all essential health and safety requirements have been met. For the complete DoC, please go to www.bannerengineering.com.

Product	Directive
ED1G Series Enabling Device	EU: Machinery Directive 2006/42/EC; Low Voltage Directive 2014/35/EU
	UKCA: Machinery (Safety) Regulation 2008; Electrical Equipment (Safety) Regulations 2016

Representative in EU: Spiros Lachandidis, Managing Director, **Banner Engineering BV** Park Lane | Culliganlaan 2F bus 3 | 1831 Diegem, BELGIUM

Representative in UK: Tony Coghlan, Managing Director, **Turck Banner LTD** Blenheim House | Blenheim Court | Wickford, Essex SS11 8YT | Great Britain

Document title: ED1G Grip-Style Enabling Device Instruction Manual
Part number: 151822
Revision: I
Original Instructions
© Banner Engineering Corp. All rights reserved.

151822

© Banner Engineering Corp. All rights reserved.