Features

The Sure Cross® Performance Direct Select Operator Interface Node takes Banner's wireless pendant offering to a new level. This package combines a multicolor indicator with capacitive touch input and a numerical display with four tactile push buttons. The Direct Select Node is perfectly suited for pick-to-light applications, call-for-parts applications, assembly guidance, and more. The battery-powered option gives you the ability to mount a bi-directional operator interface anywhere in your facility without the need for local power. This completely wireless device can travel along with operators for mobile cart and forklift applications. The DC-powered options eliminate the need to replace batteries when power is readily available.



Benefits

- **Flexible Operator Interface**—Useful as an Input or Output device
  - Call for parts
  - Operator guidance
  - Pick to light
  - Assembly guidance
  - Mobile equipment
- **Deploy easily**—Simplify installation on existing equipment and remote locations where a wired solution is impractical
- **No wiring**—Battery-powered model requires no external wiring
- **Two-way**—Node can send information back to a controller for short or missing items
- **Multi-color indication**—Active control of more than one operator using different colors
- **Capacitive touch input**—No mechanical parts, can be activated with a glove
- **Four tactile buttons**—Enable increment/decrement as well as other commands

Models

Model	Frequency	Supply Voltage	Inputs and Outputs
DX80N9DSTS	900 MHz ISM Band	3.6 V DC C cell internal battery	Multicolor capacitive touch/indicator with four buttons and a three-digit numerical LCD
DX80N2DSTS	2.4 GHz ISM Band		
DX80N2DSTS NB (ships without the battery)			
DX80N9DSTS-QD	900 MHz ISM Band	10 V DC to 30 V DC	

If you purchase a model without the battery, Banner Engineering recommends battery model **BWA-BATT-013**.

The following models are no longer available for order but are still covered by the information in this document.

Model	Frequency	Supply Voltage	Inputs and Outputs
DX80N9DSTS NB (ships without the battery)	900 MHz ISM Band	3.6 V DC C cell internal battery	Multicolor capacitive touch/indicator with four buttons and a three-digit numerical LCD
DX80N2DSTS-QD	2.4 GHz ISM Band	10 V DC to 30 V DC	

Overview

1. Capacitive touch and multicolor indicator
2. Up arrow
3. Down arrow
4. Check button
5. Back button
6. Red/green status LED—Indicates the network/binding status
7. 5-pin M12 male quick disconnect (**QD** models only)

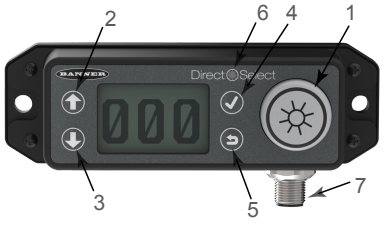

Configuration Instructions

Configure the DSTS DIP Switches

1. Unscrew the four screws that mount the top of the Node to its base.
2. Make the necessary changes to the DIP switches.
3. Fasten the Node back to its base.

Original Instructions
13-May-26

© Banner Engineering Corp. All rights reserved.
www.bannerengineering.com

214276
p/n: 214276 Rev. H

ПРОМЭЛЕКТРОНИКА/ sales@prom-elec.com

4. Hold down (Back) and click (Check) three times. Release (Back).
   The Direct Select status LED oscillates between red to green at a rate of 1 Hz to indicate you were successful.
5. Wait one second.
6. Press and hold down (Back) and click (Check) twice. Release (Back).
   The Node resets and returns to Run mode with the updated DIP switch configuration.

DSTS DIP Switch Settings

DIP switch settings

Device Settings	DIP Switches			
	1	2	3	4
900 MHz transmit power level: 1 Watt (30 dBm) (default setting)	OFF			
900 MHz transmit power level: 250 mW (24 dBm), DX80 compatibility mode	ON			
Default I/O (default setting)		OFF	OFF	OFF
Single register control mode		ON	OFF	OFF
PICK mode		OFF	ON	OFF
Operator lockout		OFF	OFF	ON
DEMO mode		ON	ON	ON
User Configuration Software configurable		OFF	ON	ON
Reserved		ON	OFF	ON
Single register lockout mode [1]		ON	ON	OFF

Transmit Power Levels—The 900 MHz radios have a high output option that will transmit at 1 W (30 dBm). The low output option transmits at 250 mW (24 dBm). The 250 mW mode reduces the radio's range but improves the battery life in short-range applications. For 2.4 GHz models, this DIP switch is disabled. The transmit power for 2.4 GHz is fixed at about 65 mW EIRP (18 dBm).

Default I/O—This configuration uses individual output registers to control the Direct Select Node. The holding registers for Inputs 1 through 5 increment one (1) for each touch and up one (1) for each release. It counts both the high (touch) and the low (release) transition for each button press.

Single Register Control—Single register control combines all the output registers from the default I/O mode into a single register. (See the Single Register Control Word section in "Holding Registers" on page 3 for a binary breakdown.)

PICK Mode—The output flashes red (mis-pick) when the Capacitive Touch button is pressed unless a green pick request is sent via Single Register Control. A green pick request requires that the green LED is turned on. To turn off the mis-pick condition, press the **Back** button to return the Node to a time-out state. **Enter** and **Back** do not control the Back light in PICK mode. Pressing the capacitive touch button turns off the display.

Operator Lockout—Use this mode when you would like to use the Node as a display. Touching the buttons causes registers 1 through 5 to increase at the controller. The screen's number will not increase, you cannot turn the back light on or off, and you cannot turn off the screen and indicator as in the other modes.

Single Register Lockout—Combines the functions of Operator Lockout and Single Register Control modes. Use this mode when you would like to use the Node as a display with the ability to control the LCD and LED indicators with a single register for faster processing. Touching the buttons causes registers 1 through 5 to increase at the controller. The screen's number will not increase, you cannot turn the back light on or off, and you cannot turn off the screen and indicator as in other modes. All the output registers from the default I/O mode are combined into a single register. See the Single Register Control Word section in "Holding Registers" on page 3 for a binary breakdown.

Apply Power to the DSTS by Installing or Replacing the Battery

Follow these instructions to install or replace the 3.6 V C cell battery.

As with all batteries, these are a fire, explosion, and severe burn hazard. Do not burn or expose them to high temperatures. Do not recharge, crush, disassemble, or expose the contents to water. Properly dispose of used batteries according to local regulations by taking the batteries to a hazardous waste collection site, an e-waste disposal center, or other facility qualified to accept lithium batteries.

1. Unscrew the four corner screws and open the Node.
2. If applicable, remove the discharged battery.
3. Install the new battery.
   Use a 3.6 V C cell lithium thionyl chloride battery (non-rechargeable, rated 8.5 Ah), Banner model **BWA-BATT-013** or equivalent.
4. Verify the battery's positive and negative terminals align to the positive and negative terminals as marked.

[1] Single Register Lockout is active for RF firmware revision 8.8 or higher on battery-powered Direct Selects and active on all DSTS-QD models.

© Banner Engineering Corp. All rights reserved.
www.bannerengineering.com

CAUTION: There is a risk of explosion if the battery is replaced incorrectly.



5. Reassemble the Node and tighten the four corner screws.
6. To turn on the Direct Select Node, press and hold down the (Back) and (Check) buttons for five seconds.
   The red LED flashes to indicate the Node is on. When it starts to flash green, the Node is in sync and communicating to the controller.
7. To turn off the Direct Select Node, press and hold down the (Back) and (Check) buttons for five seconds.
   The LED stops flashing.

Apply Power to the 10-30 V DC Model

Integral 5-pin M12 male quick-disconnect connectors are wired for 10 V DC to 30 V DC power as shown.

5-pin M12 Male Quick Disconnect Connector	Pin	Wire Color	Description
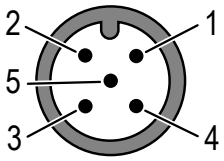	1	Brown (bn)	10 V DC to 30 V DC
	2	White (wh)	
	3	Blue (bu)	DC common (GND)
	4	Black (bk)	
	5	Gray (gy)	

Bind the Direct Select Node to the DXM and Assign the Node Address

Follow these steps to bind Direct Select Nodes to your DXM Controller.

Before beginning the binding procedure, apply power to all the devices.

1. On the DXM: Enter binding mode by going to the Main menu and selecting **ISM Radio › Binding**.
2. Select the Node ID you would like to assign to the Direct Select Node.
   Node IDs 1 through 47 are the valid selections.
3. Click **Enter** to start the binding procedure.
4. On the Direct Select Node: Enter binding mode by holding down (Back) and clicking (Check) three times.
   The red and green LEDs flash alternately and the sensor searches for a DXM in binding mode. After the Direct Select Node is bound, the LEDs stay solid momentarily (appears orange), then they both flash together four times. The Node exits binding mode.
5. Label the Node's ID number with the supplied Device ID sticker.
6. On the DXM: Click **Back** to return to the **Bind to > #** screen.
7. Repeat these steps for as many Direct Select Nodes as are needed for your network.
8. After binding all Direct Select Nodes, exit binding mode on the DXM by clicking **Back** until you return to the **Main** menu.

Holding Registers

Default I/O registers

Default I/O							
Modbus Registers		I/O Type	Additional Function	I/O Range		Holding Register Representation (Dec.)	
Gateway	Node			Min.	Max.	Min.	Max.
1	1 + (Node# × 16)	Button 1 - Capacitive Touch		0	65535	0	65535
2	2 + (Node# × 16)	Button 2 - Up	Increment LCD value by 1	0	65535	0	65535
3	3 + (Node# × 16)	Button 3 - Down	Decrement LCD value by 1	0	65535	0	65535

Continued on page 4

© Banner Engineering Corp. All rights reserved.
www.bannerengineering.com

Continued from page 3

Default I/O							
Modbus Registers		I/O Type	Additional Function	I/O Range		Holding Register Representation (Dec.)	
Gateway	Node			Min.	Max.	Min.	Max.
4	4 + (Node# × 16)	Button 4 - Check		0	65535	0	65535
5	5 + (Node# × 16)	Button 5 - Back		0	65535	0	65535
6	6 + (Node# × 16)	LCD State		0	1023	0	1023
7	7 + (Node# × 16)	Reserved					
8	8 + (Node# × 16)	Device Message					
9	9 + (Node# × 16)	Red Light		0	1	0	1
10	10 + (Node# × 16)	Green Light		0	1	0	1
11	11 + (Node# × 16)	Blue Light		0	1	0	1
12	12 + (Node# × 16)	Yellow Light		0	1	0	1
13	13 + (Node# × 16)	Back Light		0	1	0	1
14	14 + (Node# × 16)	LCD Control		0	1023	0	1023
15	15 + (Node# × 16)	Control Message					
16	16 + (Node# × 16)	Reserved					

Single register control or PICK mode registers

Single Register Control or PICK Mode							
Modbus Registers		I/O Type	Additional Function - Single Register/PICK Mode	I/O Range		Holding Register Representation (Dec.)	
Gateway	Node			Min.	Max.	Min.	Max.
1	1 + (Node# × 16)	Button 1 - Capacitive Touch		0	65535	0	65535
2	2 + (Node# × 16)	Button 2 - Up	Increment LCD value by 1	0	65535	0	65535
3	3 + (Node# × 16)	Button 3 - Down	Decrement LCD value by 1	0	65535	0	65535
4	4 + (Node# × 16)	Button 4 - Check	Turn on Back light/No function	0	65535	0	65535
5	5 + (Node# × 16)	Button 5 - Back	Turn off Back light/Clear screen	0	65535	0	65535
6	6 + (Node# × 16)	LCD State		0	65535	0	65535
7	7 + (Node# × 16)	Reserved					
8	8 + (Node# × 16)	Device Message					
...	...						
14	14 + (Node# × 16)	Single Register Control		0	65535	0	65535
15	15 + (Node# × 16)	Control Message					
16	16 + (Node# × 16)	Reserved					

Operator lockout registers

Operator Lockout						
Modbus Registers		I/O Type	I/O Range		Holding Register Representation (Dec.)	
Gateway	Node		Min.	Max.	Min.	Max.
1	1 + (Node# × 16)	Button 1 - Capacitive Touch	0	65535	0	65535
2	2 + (Node# × 16)	Button 2 - Up	0	65535	0	65535
3	3 + (Node# × 16)	Button 3 - Down	0	65535	0	65535
4	4 + (Node# × 16)	Button 4 - Check	0	65535	0	65535
5	5 + (Node# × 16)	Button 5 - Back	0	65535	0	65535
6	6 + (Node# × 16)	LCD State	0	1023	0	1023
7	7 + (Node# × 16)	Reserved				
8	8 + (Node# × 16)	Device Message				
9	9 + (Node# × 16)	Red Light	0	1	0	1
10	10 + (Node# × 16)	Green Light	0	1	0	1
11	11 + (Node# × 16)	Blue Light	0	1	0	1

Continued on page 5

© Banner Engineering Corp. All rights reserved.
www.bannerengineering.com

Continued from page 4

Operator Lockout						
Modbus Registers		I/O Type	I/O Range		Holding Register Representation (Dec.)	
Gateway	Node		Min.	Max.	Min.	Max.
12	12 + (Node# × 16)	Yellow Light	0	1	0	1
13	13 + (Node# × 16)	Back Light	0	1	0	1
14	14 + (Node# × 16)	LCD Control	0	1023	0	1023
15	15 + (Node# × 16)	Control Message				
16	16 + (Node# × 16)	Reserved				

Single Register Control Word—Use the single register control word to simultaneously control the light functions and display with a single command. Example configuration: For a flashing red light with a value of 24 on the screen, enter decimal value 1048. For bits 9–0, the values 1001–1022 are reserved.

Single register control word bits

Single Register Control Word						
Bit 15	Bit 14	Bit 13	Bit 12	Bit 11	Bit 10	Bits 9-0
Flash/Solid	Back Light	Yellow	Blue	Green	Red	0-999: Display number on screen
0: Flash	0: Off	0: Off	0: Off	0: Off	0: Off	1000: Turn off the display
1: Solid	1: On	1: On	1: On	1: On	1: On	1023: Turn off the display and indicator

Single register lockout mode

Modbus Registers		I/O Type	I/O Range		Holding Register Representation (Decimal)	
Gateway	Node		Minimum	Maximum	Minimum	Maximum
1	1 + (Node# x 16)	Button 1 - Capacitive Touch	0	65535	0	65535
2	2 + (Node# x 16)	Button 2 - Up	0	65535	0	65535
3	3 + (Node# x 16)	Button 3 - Down	0	65535	0	65535
4	4 + (Node# x 16)	Button 4 - Check	0	65535	0	65535
5	5 + (Node# x 16)	Button 5 - Back	0	65535	0	65535
6	6 + (Node# x 16)	LCD State	0	65535	0	65535
7	7 + (Node# x 16)	Reserved				
8	8 + (Node# x 16)	Device Message				
...	...	...				
14	14 + (Node# x 16)	Single Register Control	0	65535	0	65535
15	15 + (Node# x 16)	Control Message				
16	16 + (Node# x 16)	Reserved				

I/O register reset—To reset the I/O counters for the buttons, write the following decimal values to the Node's I/O point 15.

I/O register reset commands

I/O register reset commands	
For I/O point	Write
1	5377
2	5378
3	5380
4	5384
5	5392
6	5408
All Points	5439

© Banner Engineering Corp. All rights reserved.
www.bannerengineering.com

Light Colors

Use the following table of outputs to produce more colors.

Output combinations to produce the selected colors

Color to Display	Output 1 (red LED)	Output 2 (green LED)	Output 3 (blue LED)	Output 4 (yellow LED)
Red	ON			
Green		ON		
Blue			ON	
Yellow				ON
Magenta	ON		ON	
Orange	ON			ON
Cyan		ON	ON	
White	ON	ON	ON	

For example, to produce the color orange, outputs 1 and 4 (red and yellow) must be on. To create white, outputs 1, 2, and 3 (red, green, and blue) must be on. This can be done with either single register control or default I/O settings.

Specifications

Radio Range

A 2 dB antenna ships with this device.

Transmit power and range are subject to many factors, including antenna gain, installation methods, characteristics of the application, and environmental conditions.

Please refer to the following documents for installation instructions and high-gain antenna options.

Installing Your Sure Cross® Radios (151514)
Conducting a Site Survey (133602)
Sure Cross® Antenna Basics (132113)

Antenna Minimum Separation Distance

900 MHz radios transmitting at ≤ 250 mW: 2 m (6 ft) with the supplied antenna

900 MHz radios transmitting at ≥ 500 mW: 4.57 m (15 ft) with the supplied antenna

2.4 GHz radios transmitting at 65 mW: 0.3 m (1 ft) with the supplied antenna

Radio Transmit Power (900 MHz, 1 W radios)

Conducted: 30 dBm (1 W)

EIRP with the supplied antenna: < 36 dBm

Radio Transmit Power (2.4 GHz radios)

Conducted: < 18 dBm (65 mW)

EIRP with the supplied antenna: < 20 dBm (100 mW)

Link Timeout (Performance)

Gateway: Configurable via User Configuration Software

Node: Defined by Gateway

Spread Spectrum Technology

FHSS (Frequency Hopping Spread Spectrum)

900 MHz Compliance (RM1809 Radio Module)

Radio module is indicated by the product label marking

Contains FCC ID: UE3RM1809

Contains IC: 7044A-RM1809

IFT: RCPBARM13-2283

2.4 GHz Compliance (DX80-2400 Radio Module)

Radio module is indicated by the product label marking

Contains FCC ID: UE300DX80-2400

Radio Equipment Directive (RED) 2014/53/EU

Contains IC: 7044A-DX8024

Supply Voltage

DSTS models: 3.6 V DC (internal battery)

DSTS-QD models: 10 V DC to 30 V DC

Typical Battery Life

Up to 2 years; see estimated battery life graphs for more information

Construction

Molded plastic, polycarbonate housing, o-ring sealed gray cover, PC Bayer plastic indicator dome, stainless steel hardware.

Default Sensing Interval

62.5 milliseconds

Report Rate

On Change of State

Button Input

Sample Rate: 62.5 milliseconds

Report Rate: On Change of State

ON Condition: Button pressed

OFF Condition: Button not pressed

Indicators

Red-yellow-green-blue colors configurable in the register

Environmental Rating

IP65

Operating Conditions

–25 °C to +55 °C (–13 °F to +131 °F)

90% at +50 °C maximum relative humidity (non-condensing)

Certifications

CE/UKCA approval only applies to 2.4 GHz models

Banner Engineering BV
Park Lane, Culliganlaan 2F bus 3
1831 Diegem, BELGIUM

Turck Banner LTD Blenheim House
Blenheim Court
Wickford, Essex SS11 8YT
GREAT BRITAIN

© Banner Engineering Corp. All rights reserved.
www.bannerengineering.com

Estimated battery life by daily events

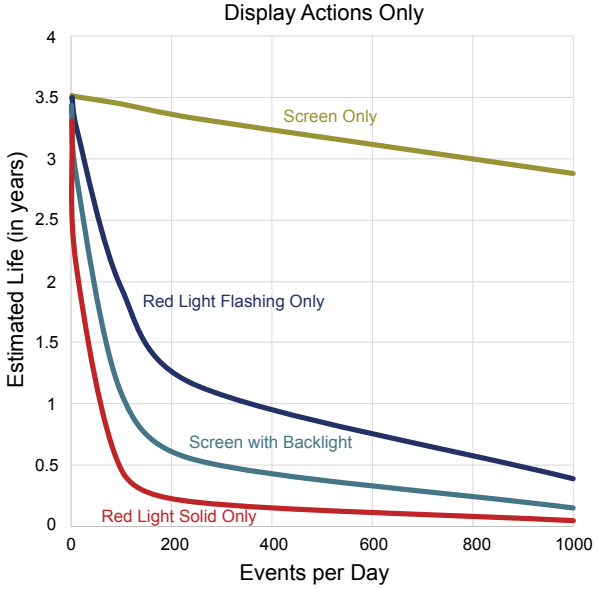

Estimated battery life by daily events and button presses

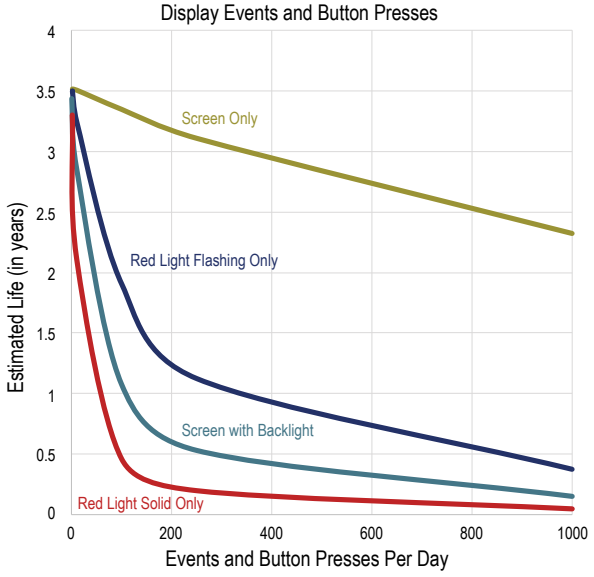

An event is when the device is on in the described state for 30 seconds.

FCC Part 15 Class A for Intentional Radiators

This equipment has been tested and found to comply with the limits for a Class A digital device, pursuant to Part 15 of the FCC Rules. These limits are designed to provide reasonable protection against harmful interference when the equipment is operated in a commercial environment. This equipment generates, uses, and can radiate radio frequency energy and, if not installed and used in accordance with the instruction manual, may cause harmful interference to radio communications. Operation of this equipment in a residential area is likely to cause harmful interference in which case the user will be required to correct the interference at his own expense.

(Part 15.21) Any changes or modifications not expressly approved by the party responsible for compliance could void the user's authority to operate this equipment.

Industry Canada Statement for Intentional Radiators

This device contains licence-exempt transmitters(s)/receiver(s) that comply with Innovation, Science and Economic Development Canada's licence-exempt RSS(s). Operation is subject to the following two conditions:

1. This device may not cause interference.
2. This device must accept any interference, including interference that may cause undesired operation of the device.

Cet appareil contient des émetteurs/récepteurs exemptés de licence conformes à la norme Innovation, Sciences, et Développement économique Canada. L'exploitation est autorisée aux deux conditions suivantes:

1. L'appareil ne doit pas produire de brouillage.
2. L'utilisateur de l'appareil doit accepter tout brouillage radioélectrique subi, même si le brouillage est susceptible d'en compromettre le fonctionnement.

© Banner Engineering Corp. All rights reserved.
www.bannerengineering.com

Dimensions

All measurements are listed in millimeters, unless noted otherwise. The measurements provided are subject to change.

DSTS dimensions

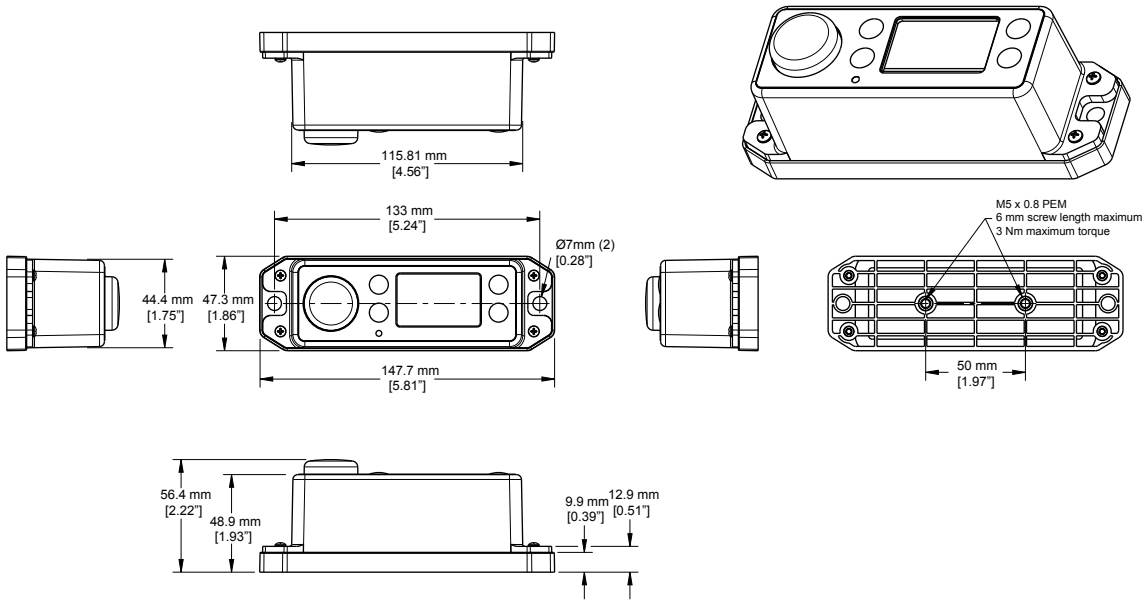

DSTS-QD dimensions

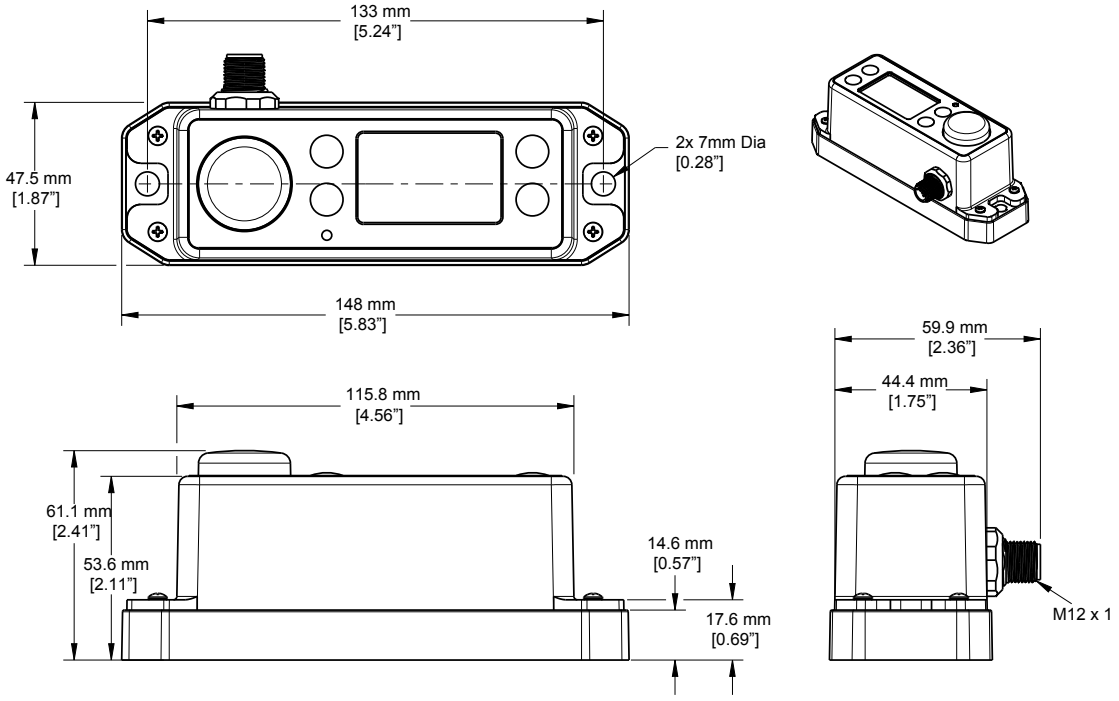

© Banner Engineering Corp. All rights reserved.
www.bannerengineering.com

Accessories

BWA-BATT-013
- 3.6 V Lithium C cell
- One battery



BWA-BK-020
- Includes two 80-lb pull rare-earth magnet mounts and two #10-32 × 1 inch screw mounts
- Used on multiple mounting brackets
- 31.75 mm (1.25 inch) diameter
- CAD Files: DXF, PDF, IGS, STP

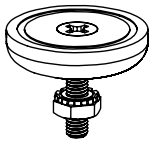

PSW-24-1
- 24 V DC, 1 A Class 2 UL Listed power supply
- 100 V AC to 240 V AC 50/60 Hz input
- 2 m (6.5 ft) PVC cable with M12 quick disconnect
- Includes Type A (US, Canada, Japan, Puerto Rico, Taiwan), Type C (Germany, France, South Korea, Netherlands, Poland, Spain, Turkey), Type G (United Kingdom, Ireland, Singapore, Vietnam), and Type I (China, Australia, New Zealand) AC detachable input plugs



5-Pin Single-Ended M12 Female Cordsets

Model	Length	Style	Dimensions	Pinout (Female)
MQDC1-501.5	0.5 m (1.5 ft)	Straight	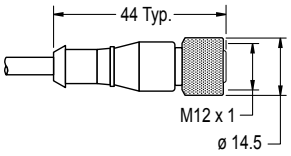	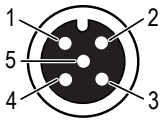
MQDC1-503	0.9 m (2.9 ft)			
MQDC1-506	2 m (6.5 ft)			
MQDC1-515	5 m (16.4 ft)			
MQDC1-530	9 m (29.5 ft)			
MQDC1-560	18 m (59 ft)			
MQDC1-5100	31 m (101.7 ft)			
MQDC1-506RA	2 m (6.5 ft)	Right-Angle	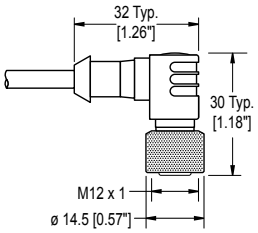	
MQDC1-515RA	5 m (16.4 ft)			
MQDC1-530RA	9 m (29.5 ft)			
MQDC1-560RA	19 m (62.3 ft)			

1 = Brown
2 = White
3 = Blue
4 = Black
5 = Gray

Warnings

WARNING:
- **Do not use this device for personnel protection**
- Using this device for personnel protection could result in serious injury or death.
- This device does not include the self-checking redundant circuitry necessary to allow its use in personnel safety applications. A device failure or malfunction can cause either an energized (on) or de-energized (off) output condition.

IMPORTANT: Please download the complete Direct Select Operator Interface Node technical documentation, available in multiple languages, from www.bannerengineering.com for details on the proper use, applications, Warnings, and installation instructions of this device.

IMPORTANT: Por favor descargue desde www.bannerengineering.com toda la documentación técnica de los Direct Select Operator Interface Node, disponibles en múltiples idiomas, para detalles del uso adecuado, aplicaciones, advertencias, y las instrucciones de instalación de estos dispositivos.

IMPORTANT: Veuillez télécharger la documentation technique complète des Direct Select Operator Interface Node sur notre site www.bannerengineering.com pour les détails sur leur utilisation correcte, les applications, les notes de sécurité et les instructions de montage.

© Banner Engineering Corp. All rights reserved.

Install and properly ground a qualified surge suppressor when installing a remote antenna system. Remote antenna configurations installed without surge suppressors invalidate the manufacturer's warranty. Keep the ground wire as short as possible and make all ground connections to a single-point ground system to ensure no ground loops are created. No surge suppressor can absorb all lightning strikes; do not touch the Sure Cross® device or any equipment connected to the Sure Cross® device during a thunderstorm.

Exporting Sure Cross® Radios. It is our intent to fully comply with all national and regional regulations regarding radio frequency emissions. **Customers who want to re-export this product to a country other than that to which it was sold must ensure the device is approved in the destination country.** The Sure Cross wireless products were certified for use in these countries using the antenna that ships with the product. When using other antennas, verify you are not exceeding the transmit power levels allowed by local governing agencies. This device has been designed to operate with the antennas listed on Banner Engineering's website and having a maximum gain of 9 dBm. Antennas not included in this list or having a gain greater than 9 dBm are strictly prohibited for use with this device. The required antenna impedance is 50 ohms. To reduce potential radio interference to other users, the antenna type and its gain should be so chosen such that the equivalent isotropically radiated power (EIRP) is not more than that permitted for successful communication. Consult with Banner Engineering Corp. if the destination country is not on this list.

IMPORTANT:

- **Never operate a radio without connecting an antenna**
- Operating radios without an antenna connected will damage the radio circuitry.
- To avoid damaging the radio circuitry, never apply power to a Sure Cross® Performance or Sure Cross® MultiHop radio without an antenna connected.

IMPORTANT:

- **Electrostatic discharge (ESD) sensitive device**
- ESD can damage the device. Damage from inappropriate handling is not covered by warranty.
- Use proper handling procedures to prevent ESD damage. Proper handling procedures include leaving devices in their anti-static packaging until ready for use; wearing anti-static wrist straps; and assembling units on a grounded, static-dissipative surface.

Banner Engineering Corp Limited Warranty

Banner Engineering Corp. warrants its products to be free from defects in material and workmanship for one year following the date of shipment. Banner Engineering Corp. will repair or replace, free of charge, any product of its manufacture which, at the time it is returned to the factory, is found to have been defective during the warranty period. This warranty does not cover damage or liability for misuse, abuse, or the improper application or installation of the Banner product.

THIS LIMITED WARRANTY IS EXCLUSIVE AND IN LIEU OF ALL OTHER WARRANTIES WHETHER EXPRESS OR IMPLIED (INCLUDING, WITHOUT LIMITATION, ANY WARRANTY OF MERCHANTABILITY OR FITNESS FOR A PARTICULAR PURPOSE), AND WHETHER ARISING UNDER COURSE OF PERFORMANCE, COURSE OF DEALING OR TRADE USAGE.

This Warranty is exclusive and limited to repair or, at the discretion of Banner Engineering Corp., replacement. **IN NO EVENT SHALL BANNER ENGINEERING CORP. BE LIABLE TO BUYER OR ANY OTHER PERSON OR ENTITY FOR ANY EXTRA COSTS, EXPENSES, LOSSES, LOSS OF PROFITS, OR ANY INCIDENTAL, CONSEQUENTIAL OR SPECIAL DAMAGES RESULTING FROM ANY PRODUCT DEFECT OR FROM THE USE OR INABILITY TO USE THE PRODUCT, WHETHER ARISING IN CONTRACT OR WARRANTY, STATUTE, TORT, STRICT LIABILITY, NEGLIGENCE, OR OTHERWISE.**

Banner Engineering Corp. reserves the right to change, modify or improve the design of the product without assuming any obligations or liabilities relating to any product previously manufactured by Banner Engineering Corp. Any misuse, abuse, or improper application or installation of this product or use of the product for personal protection applications when the product is identified as not intended for such purposes will void the product warranty. Any modifications to this product without prior express approval by Banner Engineering Corp will void the product warranties. All specifications published in this document are subject to change; Banner reserves the right to modify product specifications or update documentation at any time. Specifications and product information in English supersede that which is provided in any other language. For the most recent version of any documentation, refer to: www.bannerengineering.com.

For patent information, see www.bannerengineering.com/patents.

Notas Adicionales (con Antena)

Información México: La operación de este equipo está sujeta a las siguientes dos condiciones: 1) es posible que este equipo o dispositivo no cause interferencia perjudicial y 2) este equipo debe aceptar cualquier interferencia, incluyendo la que pueda causar su operación no deseada.

Banner es una marca registrada de Banner Engineering Corp. y podrán ser utilizadas de manera indistinta para referirse al fabricante. "Este equipo ha sido diseñado para operar con las antenas tipo Omnidireccional para una ganancia máxima de antena de 6 dBd y Yagi para una ganancia máxima de antena 10 dBd que en seguida se enlistan. También se incluyen aquellas con aprobación ATEX tipo Omnidireccional siempre que no excedan una ganancia máxima de antena de 6dBd. El uso con este equipo de antenas no incluidas en esta lista o que tengan una ganancia mayor que 6 dBd en tipo omnidireccional y 10 dBd en tipo Yagi, quedan prohibidas. La impedancia requerida de la antena es de 50 ohms."

Approved Antennas

BWA-9O2-C--Antena, Omni 902-928 MHz, 2 dBd, junta de caucho, RP-SMA Macho
BWA-9O5-C--Antena, Omni 902-928 MHz, 5 dBd, junta de caucho, RP-SMA Macho
BWA-9O6-A--Antena, Omni 902-928 MHz, 6 dBd, fibra de vidrio, 1800mm, N Hembra
BWA-9Y10-A--Antena, Yagi, 900 MHz, 10 dBd, N Hembra

Mexican Importer

Banner Engineering de Mèxico, S. de R.L. de C.V. | David Alfaro Siqueiros 103 Piso 2 Valle oriente | San Pedro Garza Garcia Nuevo Leòn, C. P. 66269

81 8363.2714

© Banner Engineering Corp. All rights reserved.
www.bannerengineering.com