WIRING DIAGRAM

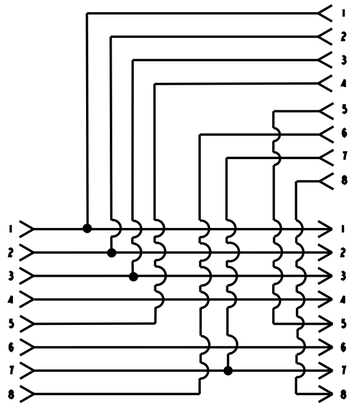

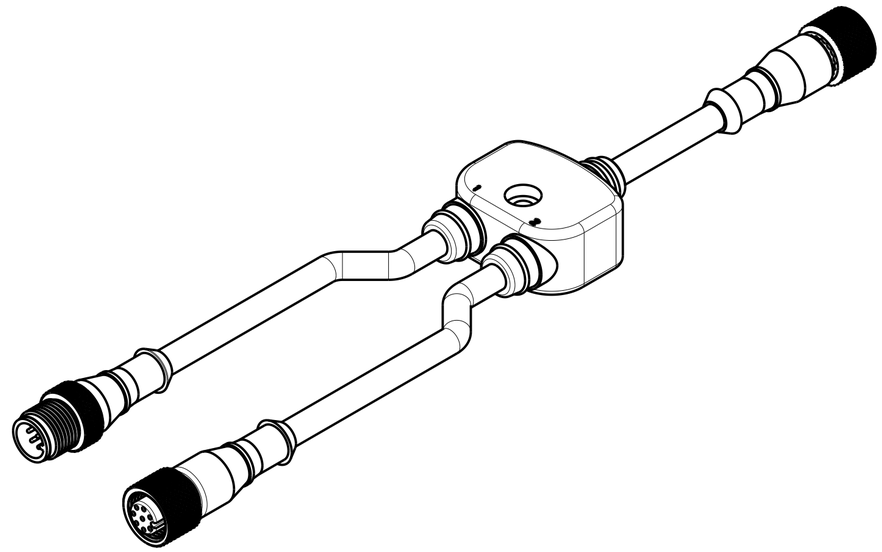

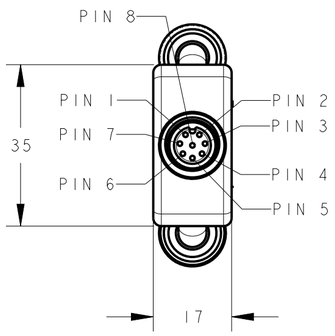

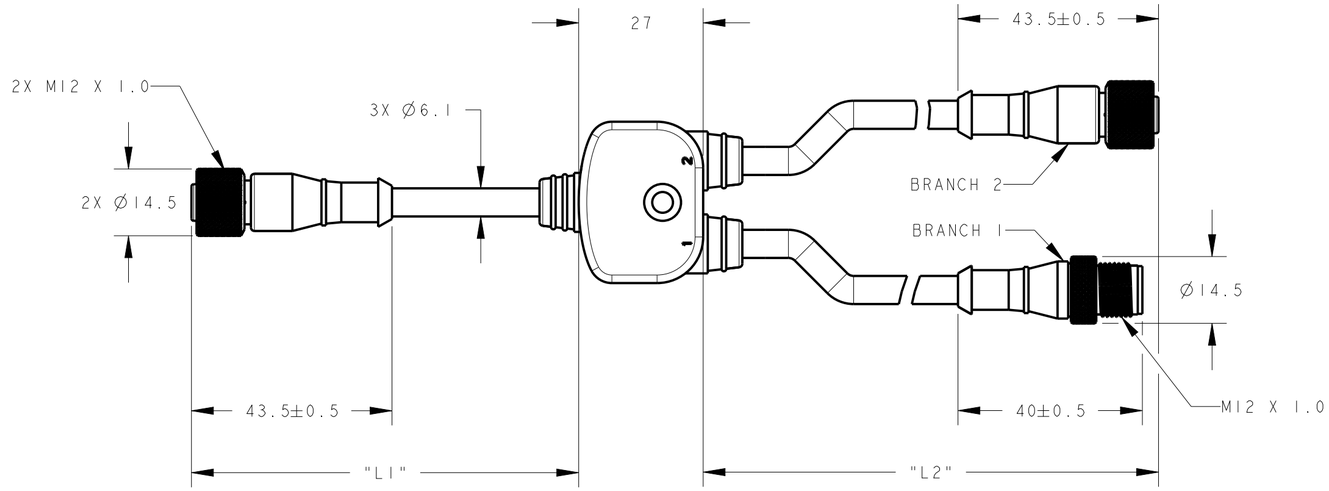

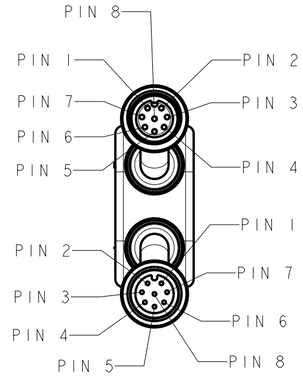

TABLE OF LENGTHS			
P/N	MODEL NO.	"L1"(m)	"L2"(m)
20606	CSS-M12F81M12M81M12F81	0.30	0.30
25472	CSS-M12F83M12M81M12F81	0.91	0.30
25473	CSS-M12F88M12M81M12F81	2.50	0.30
807217	CSS-M12F81M12M83.2M12F83.2	0.30	1.00

NOTES:
1. ALL DIMENSIONS ARE MILLIMETERS [INCHES] UNLESS OTHERWISE NOTED.
2. REFER TO "www.bannerengineering.com" FOR ADDITIONAL DATA AND SPECIFICATIONS.

This drawing is the property of BANNER ENGINEERING CORP. Any use or reproduction, in any form, without prior written permission of Banner is prohibited.
© 2015 Banner Engineering Corp.

THIRD ANGLE PROJECTION

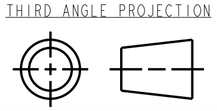

BANNER ENGINEERING CORP.
www.bannerengineering.com

TITLE
CSS-M12FXXM12MXXM12FXX

SIZE	DRAWING NO.	REV.
C	211356	A

SCALE	SHEET
1:1	1 OF 1

CREO

ПРОМЭЛЕКТРОНИКА/ sales@prom-elec.com