LM Analog/Discrete Series Laser L-GAGE® Sensor Quick Start Guide

Product Description

Laser displacement sensor that supports IO-Link communication with analog and discrete (switched) outputs.

This guide is designed to help you set up and install the LM Analog/Discrete Series Laser Sensor. For complete information on programming, performance, troubleshooting, dimensions, and accessories, please refer to the Product Manual at www.bannerengineering.com. Search for part number 205812 to view the Product Manual. Use of this document assumes familiarity with pertinent industry standards and practices.

WARNING:

- **Do not use this device for personnel protection**
- Using this device for personnel protection could result in serious injury or death.
- This device does not include the self-checking redundant circuitry necessary to allow its use in personnel safety applications. A device failure or malfunction can cause either an energized (on) or de-energized (off) output condition.

Features and Indicators

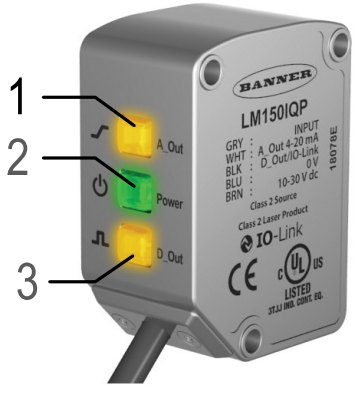

Three LED indicators provide ongoing indication of the sensing status.

1. **Analog Output LED Indicator**

   Solid Amber = Displayed distance is within the taught analog output window
   Off = Displayed distance is outside the taught analog output window

2. **Power LED Indicator**

   Solid Green = Normal operation, power On and laser On
   Flashing Green (1 Hz) = Power On and laser Off (laser enable mode)

3. **Discrete Output LED Indicator**

   Solid Amber = Discrete Output is On
   Off = Discrete Output is Off

Class 1 Laser Description and Safety Information



Laser light. Do not stare into the beam.

Complies with 21 CFR 1040.10 and 1040.11 except for deviations pursuant to Laser Notice No. 56, dated May 8, 2019.

CLASS 1
LASER PRODUCT

CAUTION:

- **Never stare directly into the sensor lens.**
- Laser light can damage your eyes.
- Avoid placing any mirror-like object in the beam. Never use a mirror as a retroreflective target.

CAUTION:

- **Return defective units to the manufacturer.**
- Use of controls or adjustments or performance of procedures other than those specified herein may result in hazardous radiation exposure.
- Do not attempt to disassemble this sensor for repair. A defective unit must be returned to the manufacturer.

Original Instructions
21-Jul-25

© Banner Engineering Corp. All rights reserved.
www.bannerengineering.com

205811
p/n: 205811 Rev. E

ПРОМЭЛЕКТРОНИКА/ sales@prom-elec.com

CAUTION:
- **Ne regardez jamais directement la lentille du capteur.**
- La lumière laser peut endommager la vision.
- Évitez de placer un objet réfléchissant (de type miroir) dans la trajectoire du faisceau. N'utilisez jamais de miroir comme cible rétro-réfléchissante.

CAUTION:
- **Tout dispositif défectueux doit être renvoyé au fabricant.**
- L'utilisation de commandes, de réglages ou de procédures autres que celles décrites dans le présent document peut entraîner une exposition dangereuse aux radiations.
- N'essayez pas de démonter ce capteur pour le réparer. Tout dispositif défectueux doit être renvoyé au fabricant.

Class 1 lasers are lasers that are safe under reasonably foreseeable conditions of operation, including the use of optical instruments for intrabeam viewing.

Complies with IEC 60825-1:2014 and EN 60825-1:2014+A11:2021.

For safe laser use:
- Do not stare at the laser.
- Do not point the laser at a person’s eye.
- Mount open laser beam paths either above or below eye level, where practical.
- Terminate the beam emitted by the laser product at the end of its useful path.

Class 1 Laser Characteristics

Output power: < 0.33 mW
Laser wavelength: 655 nm
Pulse duration: 45 µs to 1750 µs

Class 2 Laser Description and Safety Information



Laser light. Do not stare into the beam.

Complies with 21 CFR 1040.10 and 1040.11 except for deviations pursuant to Laser Notice No. 56, dated May 8, 2019.



CAUTION:
- **Never stare directly into the sensor lens.**
- Laser light can damage your eyes.
- Avoid placing any mirror-like object in the beam. Never use a mirror as a retroreflective target.

CAUTION:
- **Return defective units to the manufacturer.**
- Use of controls or adjustments or performance of procedures other than those specified herein may result in hazardous radiation exposure.
- Do not attempt to disassemble this sensor for repair. A defective unit must be returned to the manufacturer.

CAUTION:
- **Ne regardez jamais directement la lentille du capteur.**
- La lumière laser peut endommager la vision.
- Évitez de placer un objet réfléchissant (de type miroir) dans la trajectoire du faisceau. N'utilisez jamais de miroir comme cible rétro-réfléchissante.

CAUTION:
- **Tout dispositif défectueux doit être renvoyé au fabricant.**
- L'utilisation de commandes, de réglages ou de procédures autres que celles décrites dans le présent document peut entraîner une exposition dangereuse aux radiations.
- N'essayez pas de démonter ce capteur pour le réparer. Tout dispositif défectueux doit être renvoyé au fabricant.

© Banner Engineering Corp. All rights reserved.
www.bannerengineering.com

Class 2 lasers are lasers that emit visible radiation in the wavelength range from 400 nm to 700 nm, where eye protection is normally afforded by aversion responses, including the blink reflex. This reaction may be expected to provide adequate protection under reasonably foreseeable conditions of operation, including the use of optical instruments for intrabeam viewing.

Complies with IEC 60825-1:2014 and EN 60825-1:2014+A11:2021.

Class 2 Laser Safety Notes. Low-power lasers are, by definition, incapable of causing eye injury within the duration of a blink (aversion response) of 0.25 seconds. They also must emit only visible wavelengths (400 nm to 700 nm). Therefore, an ocular hazard may exist only if individuals overcome their natural aversion to bright light and stare directly into the laser beam.

For safe laser use:

- Do not stare at the laser.
- Do not point the laser at a person's eye.
- Mount open laser beam paths either above or below eye level, where practical.
- Terminate the beam emitted by the laser product at the end of its useful path.

IMPORTANT: This laser device is not bore-sighted.

Class 2 Laser Characteristics

Output power: 0.45 mW
Laser wavelength: 640 nm - 670 nm
Pulse duration: 45-1,750 ms

Installation Instructions

Sensor Installation

NOTE: Handle the sensor with care during installation and operation. Sensor windows soiled by fingerprints, dust, water, oil, etc. may create stray light that may degrade the peak performance of the sensor. Blow the window clear using filtered, compressed air, then clean as necessary using 70% isopropyl alcohol and cotton swabs or water and a soft cloth.

Install the Safety Label

The safety label must be installed on or near the LM sensors.

NOTE: Position the label on the cable or near the sensor in a location that has minimal chemical exposure.

Typical installation; other mounting options are possible.

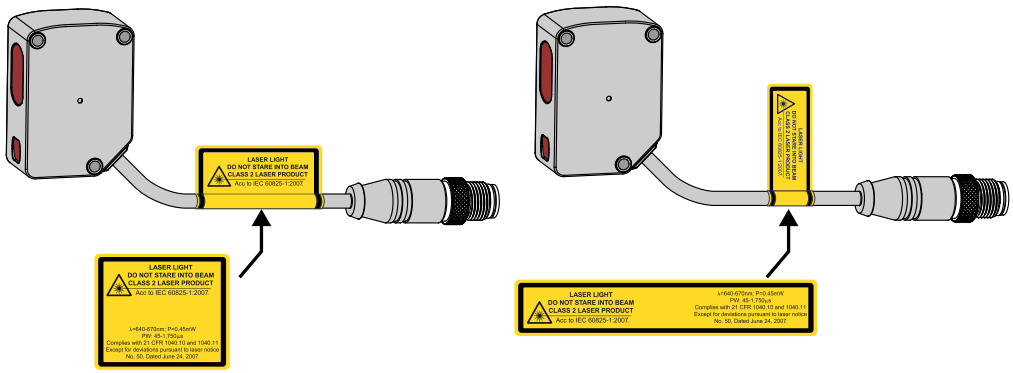

1. Remove the protective cover from the adhesive on the label.
2. Wrap the label around the LM cable, as shown.
3. Press the two halves of the label together.

Sensor Orientation

Correct sensor-to-object orientation is important to ensure proper sensing. See the following figures for examples of correct and incorrect sensor-to-object orientation as certain placements may pose problems for sensing distances.

© Banner Engineering Corp. All rights reserved.
www.bannerengineering.com

Orientation by a wall

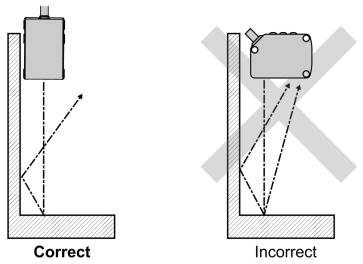

Orientation in an opening

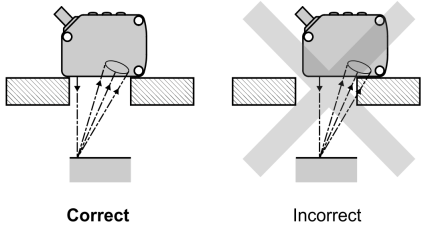

Orientation for a turning object

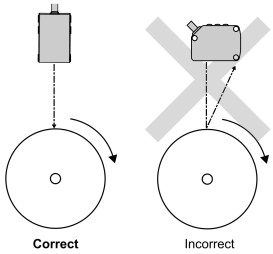

Orientation for a height difference

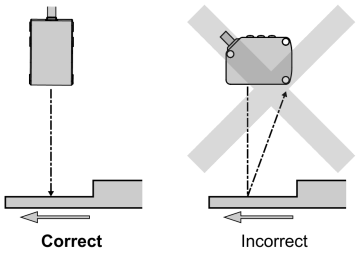

Orientation for a color or luster difference

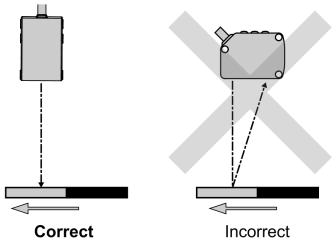

Orientation for a highly reflective target

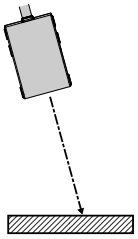

Applying tilt to sensor may improve performance on reflective targets. The direction and magnitude of the tilt depends on the application, but a 15° tilt is often sufficient.

Mount the Device

1. If a bracket is needed, mount the device onto the bracket.
2. Mount the device (or the device and the bracket) to the machine or equipment at the desired location. Do not tighten the mounting screws at this time.
3. Check the device alignment.
4. Tighten the mounting screws to secure the device (or the device and the bracket) in the aligned position.

Wiring Diagrams

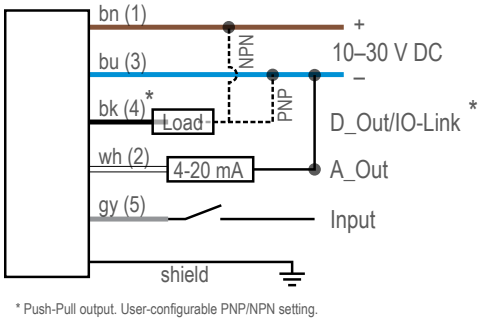

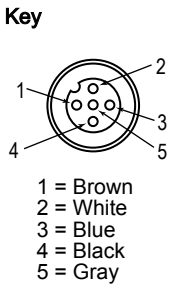

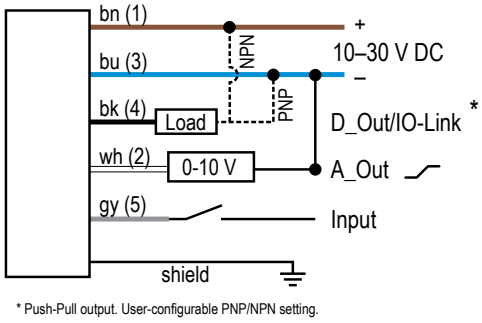

The bare shield wire is connected internally to the sensor housing and should be connected as follows:

- If the sensor housing is mounted so that it is in continuity with both the machine frame and earth ground, connect the bare wire (also) to earth ground.
- If the sensor housing is mounted so that it is insulated from the machine frame and you are experiencing noise, connecting the bare wire to -V dc (together with the blue wire), may help.
- If the sensor is mounted so that it is in continuity with the machine frame, but not with earth ground, do not connect the bare wire (e.g. cut off the bare wire).

© Banner Engineering Corp. All rights reserved.
www.bannerengineering.com

Configuration Instructions

Sensor Programming

Program the sensor using the buttons on the RSD1 remote sensor display accessory, via IO-Link, or the remote input (limited programming options).

If you are using the RSD1 for programming, from Run mode, use the buttons to access the Quick Menu and the Sensor Menu. See the instruction manual (p/n 205812) for more information on the options available from each menu. For TEACH options, follow the TEACH instructions in the instruction manual.

In addition to programming the sensor, use the remote input to disable the buttons for security, preventing unauthorized or accidental programming changes. See the instruction manual for more information.

Accessing the Menus

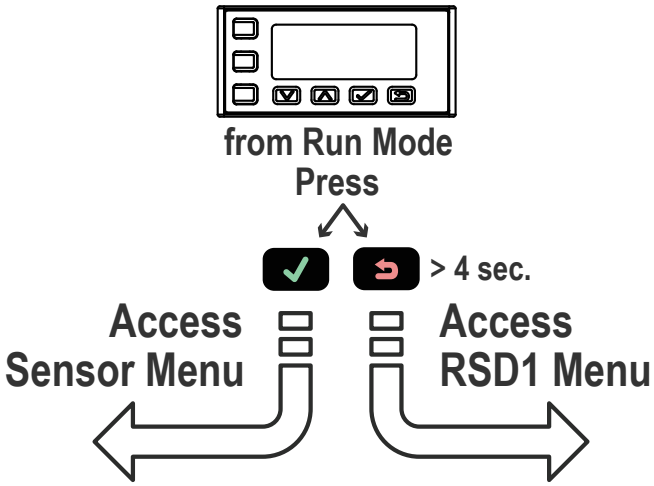

Remote Display Buttons and the LM

Use the RSD1 buttons **Down**, **Up**, **Enter**, and **Escape** to view or change RSD1 settings and information and to program a connected sensor.

Down and Up Buttons

Press **Down** and **Up** to:

- Access the Quick Menu from Run mode
- Navigate the menu systems
- Change programming settings
- Change individual digit values in distance based settings

When navigating the menu systems, the menu items loop.

Press **Down** and **Up** to change setting values. Press and hold the buttons to cycle through numeric values. After changing a setting value, the value slowly flashes until the change is saved using the **Enter** button.

Enter Button

Press **Enter** to:

- Access the Sensor Menu from Run mode
- Access the submenus
- Move right one digit in distance based settings
- Save changes

In the RSD1 Menu, a check mark in the lower right corner of the display indicates that pressing **Enter** accesses a submenu.

Press **Enter** to save changes. New values flash rapidly, and the sensor returns to the parent menu.

Continued on page 6

© Banner Engineering Corp. All rights reserved.
www.bannerengineering.com

Continued from page 5

Escape Button
Press and hold **Escape** for 4 seconds to:
- Access the RSD1 Menu while in Run mode

Press **Escape** to:
- Leave the current menu and return to the parent menu

IMPORTANT: Pressing **Escape** discards any unsaved programming changes.

In the RSD1 Menu, a return arrow in the upper left corner of the display indicates that pressing **Escape** returns to the parent menu.

Press and hold **Escape** for 2 seconds to return to Run mode from the RSD1 Menu.

Quick Menu

The sensor includes a Quick Menu with easy access to view and change the analog and discrete output switch points.

Access the Quick Menu by pressing **Down** or **Up** from Run mode. When in the Quick Menu, the current distance measurement displays on the first line and the menu name and the analog value alternate on the second line of the display.

Press **Enter** to access the switch points.

Press **Down** or **Up** to change the switch point to the desired value.

Press **Enter** to save the new value and return to the Quick Menu.

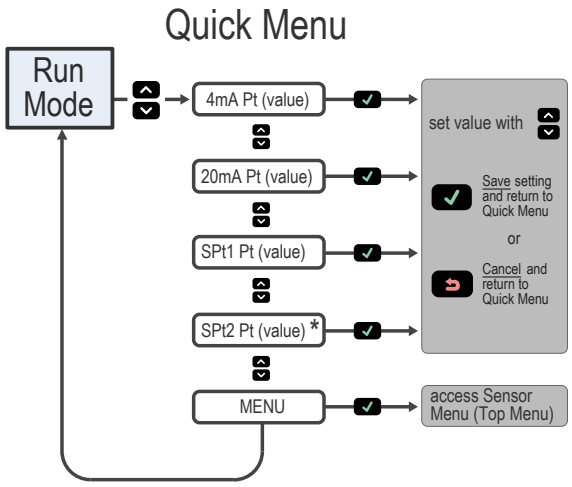

* In Setpoint mode, SPt1 Pt is replaced by SPt and SPt2 Pt is not available.
In Dual mode, SPt1 is replaced by DualSPt and SPt2 Pt is not available.

Sensor Menu (MENU)

Access the Sensor Menu by pressing **Enter** from Run mode. The Sensor Menu is also accessible from the Quick Menu: navigate to **MENU** and press **Enter**. The Sensor Menu includes several submenus that provide access to view and change sensor settings and to view sensor information.

© Banner Engineering Corp. All rights reserved.
www.bannerengineering.com

Sensor Menu Full Map

From Run mode, press **Enter** to enter the top-level menu system (A_OUT, D_OUT, INPUT, MEASURE, etc.).

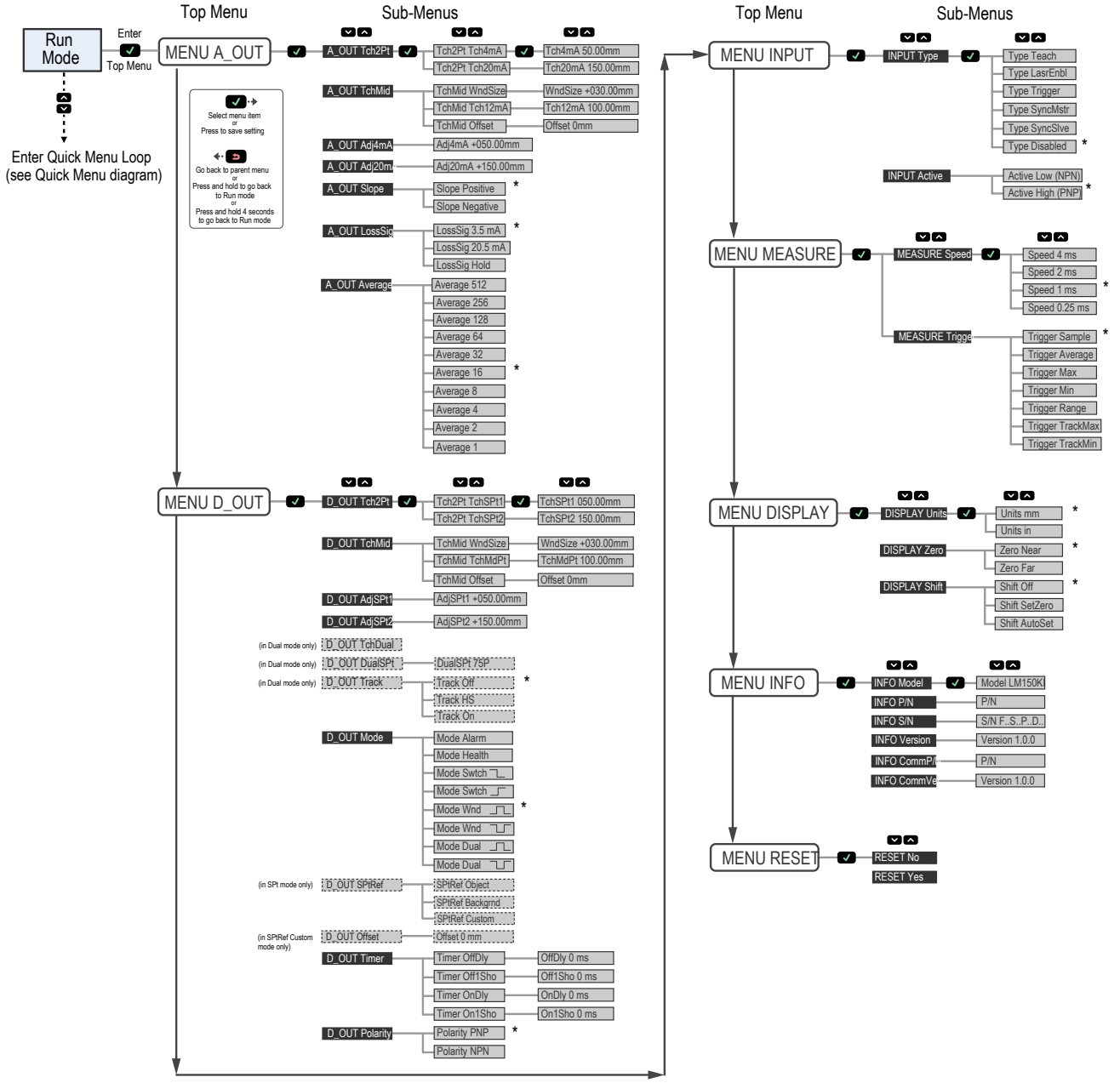

* Factory default setting

Specifications

Supply Voltage (Vcc)

10 V DC to 30 V DC

Use only with a suitable Class 2 power supply (North America)

Power and Current Consumption, exclusive of load

Normal Run Mode: 1.5 W, Current consumption < 62 mA at 24 V DC

Supply Protection Circuitry

Protected against reverse polarity and transient overvoltages

Ambient Light Immunity

10,000 lux

Construction

Housing: stainless steel

Window: acrylic

© Banner Engineering Corp. All rights reserved.
www.bannerengineering.com

Output Ratings

Discrete Output: 50 mA maximum (protected against continuous overload and short circuit)

Output saturation voltage (PNP): < 3 V at 50 mA

Output saturation voltage (NPN): < 2.5 V at 50 mA

Analog current output (LM...I Models): 500 Ω maximum

Analog voltage output (LM...U Models): 1000 Ω minimum

Maximum Torque

1.5 N·m

Remote Input

Allowable Input Voltage Range: 0 to Vcc

Active Low (internal weak pullup—sinking current):

High State: > 3.6 V
Low State: < 2.4 V

Active High (internal weak pulldown—sourcing current):

High State: > Vcc - 2.9 V
Low State: < Vcc - 4.6 V

Minimum Window Size, Analog and Discrete

LM80:

Analog: 1 mm
Discrete: 0.024 mm

LM150:

Analog: 1 mm
Discrete: 0.1 mm

Minimum Object Separation

LM80:

Uniform targets (6% to 90% reflectivity) 40 mm to 70 mm: 0.04 mm
Uniform targets (6% to 90% reflectivity) 70 mm to 80 mm: 0.06 mm
Non-uniform targets (6% to 90% reflectivity): 0.4 mm

LM150:

Uniform targets (6% to 90% reflectivity) 50 mm to 120 mm: 0.120 mm
Uniform targets (6% to 90% reflectivity) 120 mm to 150 mm: 0.140 mm
Non-uniform targets (6% to 90% reflectivity): 0.8 mm

Environmental Rating

IP67

Storage Temperature

–35 °C to +60 °C (–31°F to +140 °F)

Sensing Beam

Visible red, 655 nm

Sensing Range

LM80: 40 mm to 80 mm

LM150: 50 mm to 150 mm

Delay at Power Up

2.1 s

Measurement/Output Rate

0.25 ms to 4 ms; user selectable from the Speed menu

Output Configuration

Analog output: 4 mA to 20 mA (LM...I Models) or 0 to 10 V DC (LM...U Models)

Discrete output: Push/Pull, IO-Link

Analog Resolution

LM80: 0.002 mm

LM150: 0.004 mm

Repeatability

LM80: ± 0.001 mm[1]

LM150: ± 0.002 mm [2]

[1] Performance with 6% to 90% reflectivity with 128× averaging. With 1× averaging, repeatability of ± 0.004 mm from 40 to 80 mm.

[2] Performance with 6% to 90% reflectivity with 128× averaging. With 1× averaging, repeatability of ± 0.005 mm from 50 to 120 mm and ± 0.010 mm from 120 to 150 mm.

Analog and IO-Link Linearity

LM80:

40 mm to 70 mm: ± 0.02 mm
70 mm to 80 mm: ± 0.03 mm

LM150:

50 mm to 120 mm: ± 0.06 mm
120 mm to 150 mm: ± 0.07 mm

IO-Link Accuracy[3]

LM80: ± 0.175 mm

LM150: ± 0.2 mm

Temperature Effect, Typical

LM80: ± 0.006 mm/°C

LM150: ± 0.008 mm/°C

Response Time

Total response speed varies from 0.5 ms to 2048 ms, depending on base measurement rate and averaging settings.

See Instruction Manual for more information.

Boresighting

± 0.70 mm at 40 mm
± 0.87 mm at 50 mm
± 1.40 mm at 80 mm
± 2.62 mm at 150 mm

Vibration/Mechanical Shock

Meets IEC 60947-5-2 (10 to 60 Hz max., double amplitude 0.06 in, max acceleration 10G. 30G 11 ms duration, half sine wave)

Application Note

For optimum performance, allow 10 minutes for the sensor to warm up

Operating Conditions

–10 °C to +55 °C (+14 °F to +131 °F)

90% at +55 °C maximum relative humidity (non-condensing)

Certifications

Banner Engineering BV
Park Lane, Culliganlaan 2F bus 3
1831 Diegem, BELGIUM

Turck Banner LTD Blenheim House
Blenheim Court
Wickford, Essex SS11 8YT
GREAT BRITAIN

UL Type 1

[3] The accuracy specification refers to the possible absolute offset when installing a sensor without taking any reference measurement. Linearity is the more relevant specification for most applications.

© Banner Engineering Corp. All rights reserved.

Required Overcurrent Protection

WARNING: Electrical connections must be made by qualified personnel in accordance with local and national electrical codes and regulations.

Overcurrent protection is required to be provided by end product application per the supplied table.

Overcurrent protection may be provided with external fusing or via Current Limiting, Class 2 Power Supply.

Supply wiring leads < 24 AWG shall not be spliced.

For additional product support, go to www.bannerengineering.com.

Supply Wiring (AWG)	Required Overcurrent Protection (A)	Supply Wiring (AWG)	Required Overcurrent Protection (A)
20	5.0	26	1.0
22	3.0	28	0.8
24	1.0	30	0.5

FCC Part 15 Class A for Unintentional Radiators

This equipment has been tested and found to comply with the limits for a Class A digital device, pursuant to Part 15 of the FCC Rules. These limits are designed to provide reasonable protection against harmful interference when the equipment is operated in a commercial environment. This equipment generates, uses, and can radiate radio frequency energy and, if not installed and used in accordance with the instruction manual, may cause harmful interference to radio communications. Operation of this equipment in a residential area is likely to cause harmful interference in which case the user will be required to correct the interference at his own expense.

(Part 15.21) Any changes or modifications not expressly approved by the party responsible for compliance could void the user's authority to operate this equipment.

Industry Canada ICES-003(A)

This device complies with CAN ICES-3 (A)/NMB-3(A). Operation is subject to the following two conditions: 1) This device may not cause harmful interference; and 2) This device must accept any interference received, including interference that may cause undesired operation.

Cet appareil est conforme à la norme NMB-3(A). Le fonctionnement est soumis aux deux conditions suivantes : (1) ce dispositif ne peut pas occasionner d'interférences, et (2) il doit tolérer toute interférence, y compris celles susceptibles de provoquer un fonctionnement non souhaité du dispositif.

Banner Engineering Corp Limited Warranty

Banner Engineering Corp. warrants its products to be free from defects in material and workmanship for one year following the date of shipment. Banner Engineering Corp. will repair or replace, free of charge, any product of its manufacture which, at the time it is returned to the factory, is found to have been defective during the warranty period. This warranty does not cover damage or liability for misuse, abuse, or the improper application or installation of the Banner product.

THIS LIMITED WARRANTY IS EXCLUSIVE AND IN LIEU OF ALL OTHER WARRANTIES WHETHER EXPRESS OR IMPLIED (INCLUDING, WITHOUT LIMITATION, ANY WARRANTY OF MERCHANTABILITY OR FITNESS FOR A PARTICULAR PURPOSE), AND WHETHER ARISING UNDER COURSE OF PERFORMANCE, COURSE OF DEALING OR TRADE USAGE.

This Warranty is exclusive and limited to repair or, at the discretion of Banner Engineering Corp., replacement. **IN NO EVENT SHALL BANNER ENGINEERING CORP. BE LIABLE TO BUYER OR ANY OTHER PERSON OR ENTITY FOR ANY EXTRA COSTS, EXPENSES, LOSSES, LOSS OF PROFITS, OR ANY INCIDENTAL, CONSEQUENTIAL OR SPECIAL DAMAGES RESULTING FROM ANY PRODUCT DEFECT OR FROM THE USE OR INABILITY TO USE THE PRODUCT, WHETHER ARISING IN CONTRACT OR WARRANTY, STATUTE, TORT, STRICT LIABILITY, NEGLIGENCE, OR OTHERWISE.**

Banner Engineering Corp. reserves the right to change, modify or improve the design of the product without assuming any obligations or liabilities relating to any product previously manufactured by Banner Engineering Corp. Any misuse, abuse, or improper application or installation of this product or use of the product for personal protection applications when the product is identified as not intended for such purposes will void the product warranty. Any modifications to this product without prior express approval by Banner Engineering Corp will void the product warranties. All specifications published in this document are subject to change; Banner reserves the right to modify product specifications or update documentation at any time. Specifications and product information in English supersede that which is provided in any other language. For the most recent version of any documentation, refer to: www.bannerengineering.com.

For patent information, see www.bannerengineering.com/patents.

© Banner Engineering Corp. All rights reserved.
www.bannerengineering.com