MODEL NO.	"L"	P/N
BAM.751.5S	457 [18]	23004
BAM.752SM600	610 [24]	22676
BAM.756SM600	1829 [72]	22677
BAM.7510S	3048 [120]	22111
BAM.759S	2743 [108]	21940
BAM.751S	305 [12]	20894
BAM.753S	914 [36]	17397
BAM.754S	1219 [48]	11393
BAM.755S	1524 [60]	20595
BAM.756S	1829 [72]	20409
BAM.752S	610 [24]	17220

NOTE - M600 SUFFIX INDICATES FIBER POTTED ON ANGLE END
WITH EPOXY THAT OPERATES IN MAX. TEMPERATURE OF 600°F

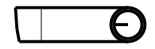

DETAIL A
SCALE 4:1

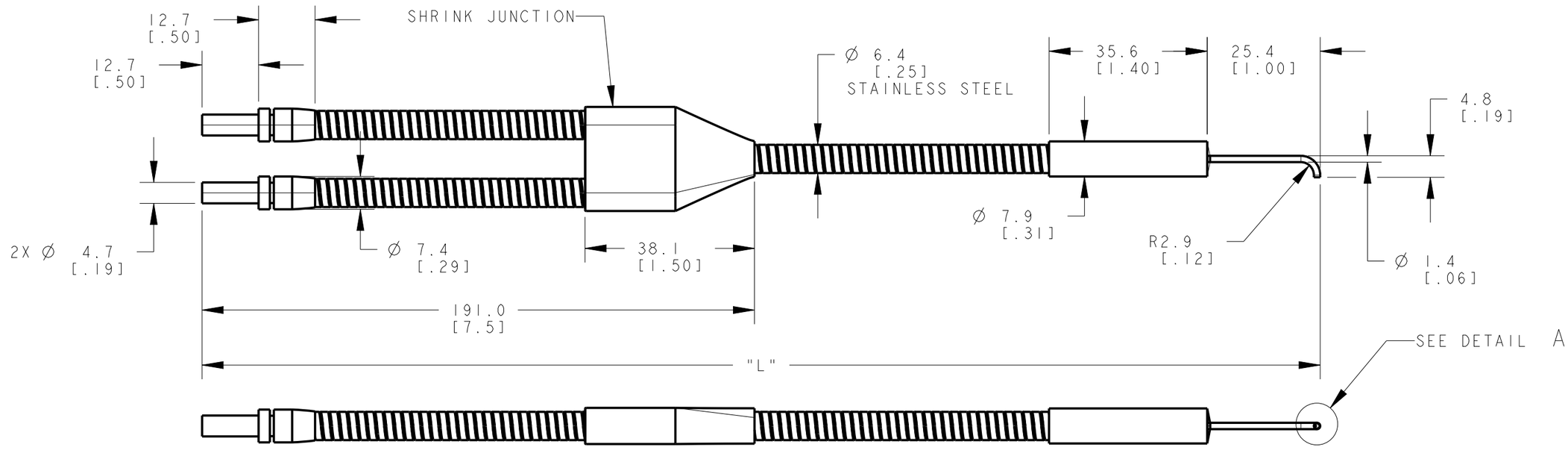

NOTES:
1. ALL DIMENSIONS ARE MILLIMETERS [INCHES] UNLESS OTHERWISE NOTED.
2. REFER TO "www.bannerengineering.com" FOR ADDITIONAL DATA AND SPECIFICATIONS.

This drawing is the property of BANNER ENGINEERING CORP. Any use or reproduction, in any form, without prior written permission of Banner is prohibited.
© 2015 Banner Engineering Corp.

THIRD ANGLE PROJECTION

BANNER ENGINEERING CORP.
www.bannerengineering.com

TITLE

BAM.752 STAINLESS STEEL SERIES

SIZE	DRAWING NO.	REV.
B	193312	A
SCALE 1:1	SHEET 1 OF 1	

CREO

ПРОМЭЛЕКТРОНИКА/ sales@prom-elec.com