IO-Link® Solutions



BANNER®

ПРОМЭЛЕКТРОНИКА/ sales@prom-elec.com

Introduction to IO-Link

In recent years, IO-Link systems have become widespread within industrial automation. IO-Link is an open-standard serial communication protocol that allows for the bi-directional exchange of data from sensors and devices that are connected to a master. The IO-Link master can transmit this data over various networks, fieldbuses, or backplane buses, making the data accessible for immediate action or long-term analysis via an industrial information system, like a PLC, HMI, and others. Banner IO-Link products reduce wiring, increase data availability, enable remote configuration and monitoring, simplify device replacement, and provide extended diagnostics. Banner Engineering offers a variety of IO-Link products for industrial applications including sensors, lighting products, converters, hubs, and IO-Link masters.

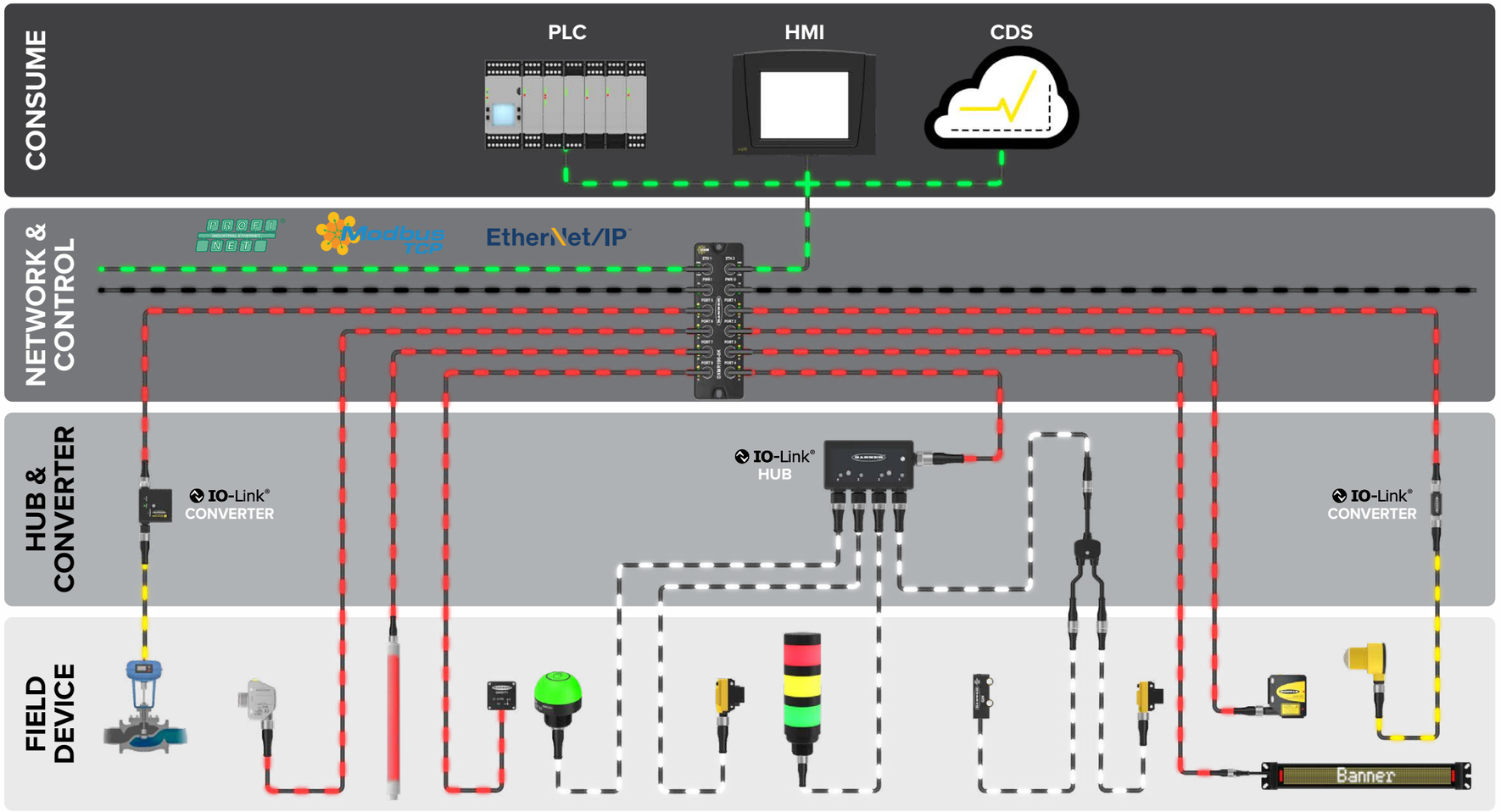



Field Devices



Connectivity



IO-Link Hubs & Converters



IO-Link Masters

Consume Data

ADVANTAGES OF IO-Link®

1. Allows seamless and simple device replacement
2. Standardizes and reduces wiring
3. Can replace analog
4. Connects to non-IO-Link devices
5. Increases data availability
6. Allows device configurations to be read and changed remotely
7. Permits advanced diagnostics
8. Enables IIoT connectivity

Learn More About the Advantages of IO-Link



BANNER® ADVANTAGE

DXMR110-8K System Diagram

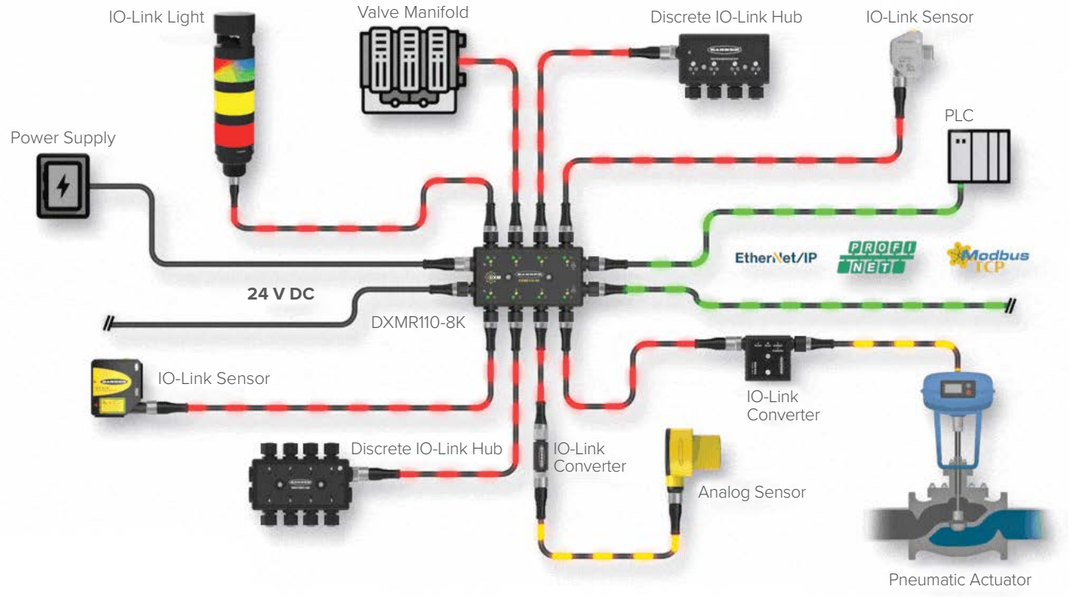

- Banner offers a wide selection of IO-Link sensors, lights, converters, hubs, and IO-Link masters
- Converters offer scalability for the future
- Online configuration software and AOIs make IO-Link device connection easier
- Rugged IO-Link masters are the most compact in the industry
- Advanced programmability allows engineers to solve unique application challenges

IO-Link® FIELD DEVICES

Capture Actionable Data

Banner is a leader in IO-Link solutions for industrial applications. We offer sensing and lighting products specifically designed to excel in IO-Link applications. Our IO-Link photoelectric sensors provide precise object detection for enhanced automation and control. Our fiber optic amplifiers offer seamless data exchange with exceptional accuracy. Our laser measurement sensors enable precise distance and position measurements in IO-Link applications for efficient and accurate process monitoring. With robust detection capabilities, our radar sensors ensure reliable, real-time object tracking in IO-Link networks, even in challenging environments. To enhance performance of IO-Link systems, Banner lighting products offer brilliant illumination, improving visibility and enabling better decision-making. Versatile designs allow for easy mounting and integration, simplifying installation and reducing downtime. And all Banner products are built to withstand harsh industrial environments, making them ideal for IO-Link applications.

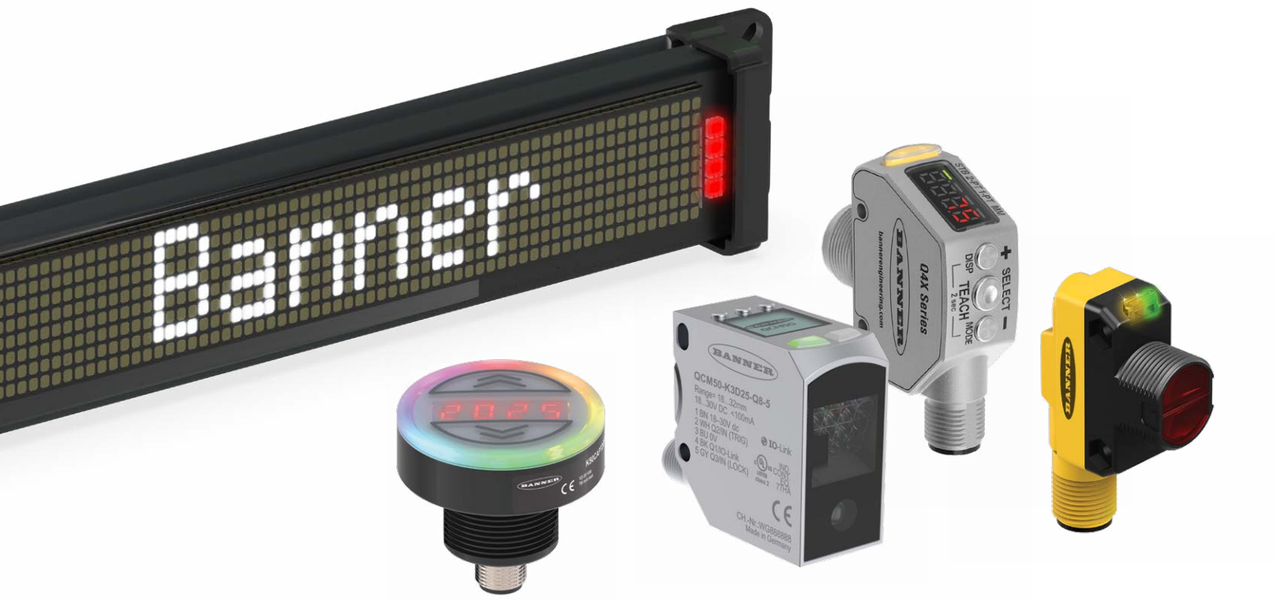

Optimize Robotic End-of-Arm Tooling Applications

- Banner's compact and lightweight IO-Link masters can help optimize machine designs and performance in robotic end-of-arm tooling applications
- Unique form factor with M12 ports on the sides allowing better cable routing and less cable bend radius issues

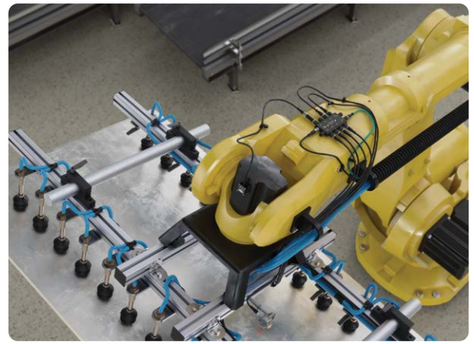



Object Verification on Bottling Line

- Banner's IO-Link Q4X laser distance sensor offers dual discrete outputs. IO-Link allows for remote device configuration, sensor backup and easier diagnostics.
- With the capability to detect height changes as small as 0.5 mm and distances up to 300 mm, the Q4X can solve distance-based applications regardless of target surface reflectivity, including black foam on black plastic, black rubber in front of metal, multicolor packaging and targets of all colors

Reduce Machine Costs, Simplify System Designs, and Reduce Installation Time

- Combinations of Banner IO-Link masters and IO-Link hubs allow the processing of up to 128 I/O signals
- Standardizing on IO-Link hubs enables users to reduce wiring to the PLC and standardize on M12 cables, which are cost effective and easy to install

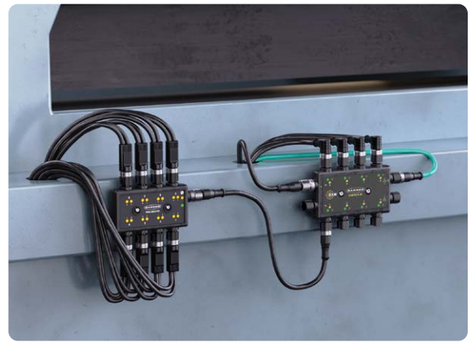

Learn more at snapsignal.bannerengineering.com

IO-Link® FIELD DEVICES



QS18 All-Purpose Compact Sensors

- Includes rugged, sealed housing with protected circuitry
- Easily fits (or retrofits) almost any mounting situation
- Has less than 1 millisecond output response for excellent sensing repeatability
- Capable of ranges up to 20 m
- Offers mechanical and electronic adjustable field background suppression

Series	Output	Input	Sensing Mode	Connection
QS18	**K**	**6**	**LP**	**Q8**
QS18 = Standard **QS18E** = Expert	**K** = IO-Link	**6** = 10-30 V DC	**E** = Emitter **R** = Receiver **LP** = Polarized retroreflective **D** = Diffuse **AF###** = Adjustable-field with range **XLPC** = Coaxial polarized retroreflective with clear object detection	**Blank** = 2 m cable **Q** = 150 mm cable with M8 QD **Q5** = 150 mm cable with M12 QD **Q7** = Integral M8 QD **Q8** = Integral M12 QD QD models require mating cordset



Q20 Compact Sealed Sensors

- Compact, rugged, sealed, over-molded plastic housing
- Standard 3 mm threaded mounting holes on 25.4 mm (1 in.) spacing

Series	Output	Sensing Mode	Connection
Q20	**K**	**AF200**	**Q**
K = PNP with IO-Link	**AF200** = Adjustable-field with 200 mm range **AF400** = Adjustable-field with 400 mm range	**Q** = 150 mm cable with M8 QD **Q5** = 150 mm cable with M12 QD **Q7** = Integral M8 QD QD models require mating cordset



Q2X Laser Measurement Sensors

- Measure farther with the industry's longest sensing range for a sensor in a compact housing
- Sense the most challenging targets like dark or shiny poly bags with a powerful infrared laser with best-in-class excess gain
- Employ sensors in many applications by consolidating to one sensor model with an array of sensing modes, including background suppression, window mode, and dual mode

Series	Housing Style	Mode	Range	Beam Color	Connection
Q2X	**K**	**LAF**	**3**	**IR**	**Q5**
	K = IO-Link with discrete	**LAF** = Laser adjustable-field	**3** = 3 m **2** = 2 m	**IR** = Infrared	**Q** = 150 mm M8 pigtail QD **Q5** = 150 mm M12 pigtail QD QD models require mating cordset



B25 Wide Beam Sensors

- Reliably detect leading edges of polybags, mailers, and boxes
- Delivers superior detection across a wide beam regardless of target shape, position, or material
- Avoids chatter caused by targets with folded edges, holes, or open flaps
- Perform quick setup and configuration using a single button, remote input wire, or IO-Link interface

Series	Output State	Output	Mode	Connection
B25	**K**	**6**	**LP**	**Q5**
K = Push/pull with IO-Link, PNP		**6** = 10 to 30 V DC	**LP** = Polarized retroreflective	**Q5** = 4-pin M12 integral QD QD models require mating cordset



DF-G Fiber Optic Amplifiers

- Easy-to-use DIN-rail-mountable fiber optic sensor
- Compact housing with dual digital displays and bright output LEDs for easy programming and status monitoring
- Available in high power models, ultra-fast models, and specialty models
- Compatible with a wide variety of fiber optic cables to fit into any application

Series	LED Color*			–	Discrete Output Type	Output Configuration	–	Connection
DF-G3					**K**	**D**		**2M**
DF-G1 **DF-G2** **DF-G3**	**Blank** = Visible red LED **B** = Blue LED† **G** = Green LED†	**W** = White LED† **IR** = Infrared LED **LIR** = Long infrared LED**	*Not available with DF-G1 models **Not available with DF-G2 models †Not available with DF-G3 models		**K** = IO-Link	**S** = Complementary **D** = Dual discrete*		**2M** = 2m cable **Q3** = 150 mm cable with M8 QD **Q5** = 150 mm cable with M12 QD **Q7** = Integral 4 pin M8 QD models require mating cordset



LTF Long-Range Laser Measurement Sensors

- Best in class combination of range, repeatability and accuracy enables reliable target detection and precise distance measurement
- Durable IP67 metal housing with 100G shock rating
- High ambient light immunity and stable performance across temperatures provides reliable performance in challenging environments

Series	Range	Output	Laser Class	Sensing Mode	Connector
LTF	**12**	**K**	**C2**	**LD**	**Q**
	12 = 12 m **24** = 24 m	**K** = Dual discrete (NPN/PNP configurable) with IO-Link	**C2** = Class 2	**LD** = Laser diffuse	**Q** = Rotatable M12 QD QD models require mating cordset

IO-Link® FIELD DEVICES



T30R Radar Sensors

- Reliable detection of high-dielectric targets (like metal or large amounts of water) and lower-dielectric materials (such as wood, rock, or organic material)
- Compact, IP67-rated housing for use in challenging environments (T30RW model features IP69K-rated housing)
- Crosstalk immunity, allowing for multiple sensors to be mounted in close proximity

Series	Housing		Beam Angle		Bandwidth		Output		Connector
T30R		–	**1515**	–		–	**KD**		**Q**
	Blank = Standard **W** = IP69K*		**1515** = 15° x 15° beam **4545** = 45° x 45° beam		**Blank** = Standard **C** = Near range* **L** = Long range*		**KD** = Dual discrete with IO-Link **KI** = Discrete with IO-Link and 4–20 mA analog **KU** = Discrete with IO-Link and 0–10 V analog		**Q** = Integral M12 QD **QP** = 150 mm M12 QD pigtail QD models require mating cordset

*Only available in 1515 beam angles



Q4X Rugged Laser Measurement Sensors

- Best price with performance short-range sensing solution
- Most compact, rugged IP69, Ecolab-certified, stainless-steel housing
- Dual mode for contrast and clear object detection without a reflector
- Flush mount or barrel mount housing options for versatility in mounting

Threaded-Barrel Q4XT

Series	Housing Style	Output	Mode	Range		Connector
Q4X	**T**	**K**	**LAF**	**300**	–	**Q8**
	T = 18 mm threaded barrel	**K** = Dual discrete with IO-Link	**LAF** = Laser adjustable-field	**600** = 25–600 mm **500** = 25–500 mm **300** = 25–300 mm **100** = 25–100 mm		**Q8** = Integral QD

Flush-Mount Q4XF

Series	Housing Style	Output	Mode	Range		Connector
Q4X	**F**	**K**	**LAF**	**310**	–	**Q8**
	F = Flush face	**K** = Dual discrete with IO-Link	**LAF** = Laser adjustable-field	**610** = 35–610 mm **510** = 35–510 mm **310** = 35–310 mm **110** = 35–110 mm		**Q8** = Integral QD



Q5X Laser Measurement Sensor

- Best price with performance mid-range sensing solution
- Highest excess gain for detecting the darkest targets at extreme angles
- Dual mode for contrast and clear object detection without a reflector
- Jam detection model alerts operators to production line jams, reducing or preventing downtime

Series	Output	Mode	Range (mm)		Connector	Options
Q5X	**K**	**LAF**	**2000**	–	**Q8**	
	K = Configurable dual discrete with IO-Link on all models **KU** = 0–10 V with push/pull discrete output or IO-Link **KI** = 4–20 mA with push/pull discrete output or IO-Link	**LAF** = Laser adjustable field background suppression	**2000** **3000*** **5000** **10000**		**Q8** = Integral swivel M12 connector *KU and KI models available in 3000 mm range only **Jam model only available with 2000 mm	**-Jam** = Jam model** **Blank** = Standard model



LE Precision Mid-Range Laser Measurement Sensors

- Highest-precision sensor for mid-range applications from 100 mm to 1 m
- Low-temperature effect for measurement stability in any environment
- Class 1 and Class 2 laser options

Series	Range	Output	Laser Class	Connector
LE	**550**	**K**		**Q**
	550 =100–1000 mm **250** =100–400 mm	**K** = IO-Link and (1) PNP discrete NOTE: Discrete NPN/PNP is user configurable	**Blank** = Class 2 **C1** = Class 1	**Q** = Rotatable M12 QD QD models require mating cordset



LM Compact Laser Measurement Sensors

- Short-range, high precision, even on shiny metals
- Smallest spot size for more measurements and fewer color-transition errors
- High excess gain for detecting the darkest targets
- Least affected by temperature changes, for measurement stability in any environment
- Small stainless-steel housing for longevity and durability

Series	Range (mm)	Output	Connector
LM	**150**	**KI**	**QP**
	150 = 50–150 **80** = 40–80	**KI** = Discrete with IO-Link and 4–20 mA analog **KU** = Discrete with IO-Link and 0–10 V analog	**QP** = PVC 150 mm cable with M12 QD

IO-Link® FIELD DEVICES



Q20-2 Compact Photoelectric Sensors

- Infrared laser sensor's best-in-class range uses time-of-flight technology to consistently and reliably detect challenging targets up to 3 meters away
- Visible red alignment LED expedites and simplifies setup, and can be switched on or off
- Industry standard 25.4 millimeter mounting hole spacing on the compact housing makes mounting easy for both new builds and retrofitting equipment
- IO-Link streamlines control system integration and provides easy access to measurement values, delay timers, and advanced diagnostics

Series	Output	Sensing Mode	Range		Connector
Q20-2	**K**	**LAF**	**3**	–	**Q5**
	K = IO-Link with discrete	**LAF** = Laser adjustable-field	**2** = 2 m **3** = 3 m		**Q** = 150 mm (6 in.) 4-pin M8 pigtail **Q5** = 150 mm (6 in.) 4-pin M12 pigtail



K50Z Multipoint Sensors

- Detect more reliably across a wide area
- Use less hardware and save commissioning time
- Customize configuration with intuitive Banner Measurement Software

Series	Housing Style		Field of View	Sensing Range	Communications	Output		Connector
K50Z	–	**F**	**A**	**2000**	**K**	**D**	–	**Q8**
		F = Flush mount	**A** = 45 x 45 degree	**2000** = 2000 mm	**K** = IO-Link	**D** = Dual discrete		**Q8** = 5-pin integral M12



K50R Radar Sensors

- Cost-efficient alternative to long-range ultrasonic sensors
- Superior and consistent operation in any environment
- Simple integration and streamlined troubleshooting

Series	Housing		Beam Angle		Range	Communications	Output	Connector
K50R	**F**	–	**4030**	–	**L**	**K**	**D**	**Q**
	F = Flush mount **B** = Base mount		**4030** = 40° x 30° beam		**L** = Standard	**K** = IO-Link	**D** = Dual discrete	**Q** = 5-pin integral M12 QD

QD models require mating cordset



Q90R High Power, Multipurpose Radar Sensors

- Robust design for superior and consistent operation in any environment
- Versatility to outperform optical and ultrasonic technologies in demanding conditions
- Intuitive interface enables simple integration and streamlines troubleshooting
- Enhance equipment performance with advanced configuration and detection

Q90R Series Radar: 40° x 40° field of view

Series		Beam Pattern		Operating Frequency	Communication	Output Configuration	Connection
Q90R	–	**4040**	–	**6**	**K**	**D**	**Q**
		4040 = 40° x 40°		**6** = 60 GHz	**K** = IO-Link	**D** = Dual discrete **I** = 4-20 mA analog **U** = 0-10 V analog	**Q** = 5-pin M12 integral QD QD models require mating cordset

Q90R2 Series Radar: Configurable 120° x 40° field of view and multi-target detection

Series		Beam Pattern		Operating Frequency	Communication	Output Configuration	Connection
Q90R2	–	**12040**	–	**6**	**K**	**D**	**Q**
		12040 = 120° x 40°		**6** = 60 GHz **7** = 77 GHz*	**K** = IO-Link	**D** = Dual discrete **I** = 4-20 mA analog **U** = 0-10 V analog	**Q** = 5-pin M12 integral QD QD models require mating cordset

*Global telecom approval for use in mobile equipment applications. Available with dual discrete model only.



QCM50 High-Performance Color Sensors

- Reliable color detection across the entire range of the sensor
- Up to twelve colors can be detected with one sensor, reducing inventory costs and enabling faster changeover
- Anti-glare model is available to reliably detect reflective targets
- Intuitive configuration with integrated digital display and on-board buttons

Series	IO-Link		Number of Outputs	Sensing Range		Connector		Number of Pins
QCM50	– **K**	–	**3**	**D25**	–	**Q8**	–	**5**
	K = IO-Link		**1** **3** **5**	**D25** = 18 to 32 mm **D40** = 18 to 40 mm **D60** = 20 to 150 mm		**Q8** = Integral M12		**4** **5** **8**



Q76E Wide Beam Retroreflective Sensors

- Visible red beam for simple alignment and bright LEDs for visual indication
- Up to four meter range for mounting flexibility
- Two sensitivity levels for detection of challenging targets such as shrink wrapped pallets, small objects and film or perforated packaging
- Easy set-up, adjustment and LO/DO selectable via single push button

Range	Input	Output	Cable	Models
0.4 mm to 4.0 m	10 to 30 V DC	1 PNP/NPN light operate with IO-Link; 1 PNP dark operate	200 mm PUR cable with a 4-pin M12 male quick disconnect	**Q76E-KP-ZLVC-Q5**



EZ-ARRAY Measuring Light Curtains

- Applications include edge and center-guiding, loop tension control, hole sizing, parts counting and on-the-fly product sizing and profiling
- Closely spaced infrared beams provide 5 mm resolution or 2.5 mm single edge resolution
- Controller functionality is built into the receiver, so basic setup requires no controller, software, or PC
- Configuration options include 14 measurement modes, three scanning methods, two analog and two discrete outputs, and a serial output

Array Length	Total Beams	Receiver Discrete Output	Receiver Analog Output	Emitter Models	Receiver Models
150 mm	30	PNP	Voltage (0-10 V)	**EA5E150Q**	**EA5R150XK2Q**
300 mm	60			**EA5E300Q**	**EA5R300XK2Q**
450 mm	90			**EA5E450Q**	**EA5R450XK2Q**
600 mm	120			**EA5E600Q**	**EA5R600XK2Q**
750 mm	150			**EA5E750Q**	**EA5R750XK2Q**
900 mm	180			**EA5E900Q**	**EA5R900XK2Q**
1050 mm	210			**EA5E1050Q**	**EA5R1050XK2Q**
1200 mm	240			**EA5E1200Q**	**EA5R1200XK2Q**
1500 mm	300			**EA5E1500Q**	**EA5R1500XK2Q**
1800 mm	360			**EA5E1800Q**	**EA5R1800XK2Q**
2100 mm	420			**EA5E2100Q**	**EA5R2100XK2Q**
2400 mm	480			**EA5E2400Q**	**EA5R2400XK2Q**



S15S Temperature and Humidity Sensor

- Temperature, humidity, and dewpoint monitoring with configurable discrete output thresholds or windows for high and low thresholds
- Ships with aluminum grill filter cap
- Optional stainless steel 10 µm sintered filter available separately
- Smart Sensor profiles available for process data modes in Fahrenheit, Celsius, and floating point

Housing	Function		Female		Male	Connector
S15	**S**	–	**TH**	–	**K**	**Q**
	S = Sensor		**TH** = Temperature and humidity		**K**= IO-Link	**Q** = M12 integral quick disconnect



QM30VT Vibration and Temperature Sensor

- Provides high accuracy vibration and temperature measurements
- Industrial grade sensor with small form factor to fit in the tightest locations
- Connects to any Modbus network for easy setup and installation

I/O	Number of Axis	Housing	Connection	Models
Vibration and temperature via IO-Link	3	Aluminum	150 mm 5-pin M12 male QD	**QM30VT3-KQP**
		316L Stainless Steel	150 mm 5-pin M12 male QD	**QM30VT3-SS-KQP**



Single-Phase Current Sensors

- Detect abnormal load-current conditions before they lead to trips, overheating, torque loss, loss of load, or downtime
- Provide current readings and threshold status for alarm or stop logic when measured current falls outside the expected range, using configurable low-current and high-current thresholds
- Add current monitoring without disconnecting or rerouting power conductors, using an included split-core current transformer matched to the selected 20 A, 150 A, or 600 A current range
- Make current values and threshold status trendable in HMIs, SCADA systems, and cloud platforms with IO-Link®
- Deploy current monitoring in exposed industrial areas with M12 quick-disconnect connectivity and an IP65/IP67/IP68-rated converter housing

Description	Communication	Range	Models
Current transformer sensor	IO-Link	0-20 Amps	**S15C-CT20A-KQ**
		0-150 Amps	**S15C-CT150A-KQ**
		0-600 Amps	**S15C-CT600A-KQ**

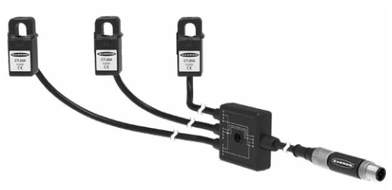

3-Phase Current Sensors

- Detect abnormal load or line conditions on up to three AC lines before they lead to trips, overheating, torque loss, or downtime
- Output current readings and threshold status for alarm or stop logic when measured current falls outside the expected range, using configurable low-current and high-current thresholds
- Add current monitoring without disconnecting or rerouting power conductors, using three included split-core current transformers matched to 20 A, 150 A, or 600 A models
- Make current values and threshold status trendable in HMIs, SCADA systems, and cloud platforms with IO-Link
- Deploy current monitoring in exposed industrial areas with M12 quick-disconnect connectivity and an IP65/IP67/IP68-rated converter housing

Description	Communication	Range	Models
Three current transformer sensors	IO-Link	0-20 Amps	**S15C-3CT20A-KQ-1**
		0-150 Amps	**S15C-3CT150A-KQ-1**
		0-600 Amps	**S15C-3CT600A-KQ-1**



WLS15 Programmable LED Strip Lights

- Provides operator guidance for assembly and manufacturing processes
- Configurable, dynamic indication in a slim, sealed LED strip light
- Nineteen color options plus animations and direct sensor interface give limitless options to convey status, resulting in clear communication

Series	Style	Cascadable	Color	Length (mm)	Window	Construction	Control	Connector
WLS15	**P**	**X**	**RGB**	**0360**	**D**	**S**	**K**	**QP**

- **P** = Programmable
- **X** = Non-cascadable
- **RGB** = RGB multicolor
- **0220** **0640** **0360** **0920** **0500** **1200**
- **D** = Diffuse
- **S** = Sealed (IP66, IP67)
- **K** = IO-Link
- **QP** = 150 mm cable with M12 QD



WLS27 Programmable LED Strip Lights

- Programmable models with RGBW LEDs for use in indication, illumination, and inspection applications
- IO-Link helps reduce costs, increase process efficiency, and improves machine availability

Series	Style	Cascadable	Color	Lighted Length (mm)	Window	Construction	Control	Connector
WLS27	**P**	**X**	**RGBW**	**285**	**D**	**S**	**K**	**Q**

- **P** = Programmable
- **X** = Non-cascadable
- **RGBW** = RGBW multicolor
- **145** **570** **285** **850** **430** **1130**
- **D** = Diffuse plastic
- **H** = Heavy diffuse plastic
- **S** = Sealed
- **K** = IO-Link
- **Q** = M12 integral QD

QD models require mating cordset

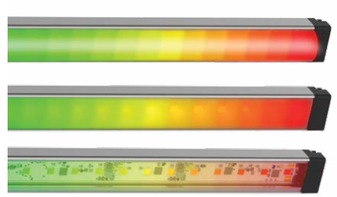

WLS28 Programmable LED Strip Lights

- High quality illumination and indication from RGBW LEDs
- Six white color temperatures for comfort and compatibility
- Thirteen color options for varied indication and inspection uses
- IO-Link gives full access to individual LED control, color, flashing, intensity, and animation settings, as well as advanced operating modes for displaying distance, count, time, and position

Series	Style	Cascadable	LED Color	Lighted Length (mm)	Window	Construction	Control	Connector
WLS28	**P**	**X**	**RGBW**	**285**		**X**	**K**	**Q**

- **P** = Programmable
- **X** = Non-cascadable
- **RGBW** = RGBW multicolor
- **145** **570** **285** **850** **430** **1130**
- **Blank** = Clear plastic
- **D** = Diffuse plastic
- **L25** = 25° lensed window
- **L25D** = 25° diffuse lensed window
- **X** = IP50
- **K** = IO-Link
- **Q** = M12 integral QD

QD models require mating cordset

IO-Link® FIELD DEVICES



TL50 Programmable Tower Lights

- Up to ten segments for advanced status signaling and high-resolution process details
- Advanced animations like level, timer, counter, and action mode provide dynamic visual response
- Parameter and process data options on IO-Link models enable fast and complete control of functionality

Housing	Number of Segments		Audible Alarm	Control	Housing Color	Connection
TL50	**3**		**A**	**K**		**Q**
TL50 = Standard **TL50C** = Compact **TL50BL** = Beacon **TL50PS** = Programmable	**1*** = 1 segment **2*** = 2 segments **3** = 3 segments **4*** = 4 segments **5*** = 5 segments	**6*** = 6 segments **7*** = 7 segments **8*** = 8 segments **9*** = 9 segments **10*** = 10 segments	**Blank** = None **A** = Audible **ALS** = Sealed audible continuous tone* **AOS** = Omni-directional sealed audible continuous tone* **AOSI** = Omni-directional sealed audible continuous tone with intensity adjust*	**K** = IO-Link	**Blank** = Black **C** = Gray*	**Q** = M12 integral QD **QP** = 150 mm cable with M12 QD*

QD models require mating cordset
*Not available with TL50PS models



TL70 Programmable Tower Lights

- Programmable series tower lights provide classic segment control as well as advanced status indication that adds nuance to the visual factory
- Allows users to configure color, flashing, rotation, and light intensity
- Models with IO-Link communication enable almost limitless capacity for custom indication

Preassembled Programmable Models with IO-Link

Housing	Style	Number of Segments		Audible Alarm*	Control	Housing Color	Connection
TL70	**P**	**3**		**A**	**K**		**Q**
P = Programmable		**1** = 1 segment **2** = 2 segments **3** = 3 segments	**4** = 4 segments **5** = 5 segments **6** = 6 segments	**Blank** = None **A** = Standard audible **AL** = Loud audible **AP** = Programmable audible	**K** = IO-Link	**Blank** = Black **C** = Gray	**Q** = 4-pin M12 integral QD **QP** = 4-pin 150 mm cable with M12 QD

QD models require mating cordset
*Not available with six-light models



CL50 Programmable Column Lights

- Rugged, versatile, and easy-to-install multicolor indicators
- Bright, easy-to-see operator guidance and indication of equipment status
- Customized indication possibilities, including color, flash patterns, and light intensity
- Audible models available with sealed, omni-directional audible element

Series	Style	Audible Alarm	Control	Connection
CL50	**P**	**A**	**K**	**Q**
P = Programmable	**Blank** = None **A** = Omni-directional sealed audible		**K** = IO-Link	**Q** = 4-pin M12 integral QD



K50 Programmable Touch with Display Indicators

- Four-digit, seven-segment LED display with two independent touch areas
- Clearly communicate status and receive feedback, improving throughput and productivity
- Ideal interface device for pick-to-light, condition monitoring, and general operator interaction in industrial environments

Series	Style	Activation Method	Housing	Display	Control	Connection
K50	**P**	**T**	**C**	**D4**	**K**	**Q**
P = Programmable		**T** = Touch	**C** = Compact	**D4** = 4-digit LED display	**K** = IO-Link	**Q** = 4-pin M12 integral QD **QP** = 150 mm cable with 4-pin M12 QD

QD models require mating cordset



SD50 Programmable Status Display

- Easily configurable, versatile display can be installed nearly anywhere, making it a simple yet powerful alternative to complex HMIs and other displays
- Great for displaying takt time, equipment status, assembly sequences, counts, and measurements where they are most useful
- Quick and easy configuration—define the desired text and call it via process data
- Bright white LED display and multicolor status LEDs, legible from 10 meters, help keep operators informed so they can respond quickly and accordingly

Description	Display Length	Control	Connection	Models
SD50 Programmable Status Display	300 mm	IO-Link	150 mm PVC-jacketed cable with 4-pin M12 male QD	**SD50P300WKQP**



K100 Programmable Display Beacon

- Improve awareness across a full 360-degrees with bright white alphanumeric display and dynamic color indication combined in a single rugged device
- Convey more detail with up to 32 scrolling alphanumeric characters legible from 10 meters
- Enhance visibility and status recognition with 14 distinct, configurable color options
- Make critical messages unmistakable with optional audible alerts that capture attention in noisy environments

Series	Style	Type	Color	Control	Audible Alarm	Connection
K100P	**D**	**BL**	**RGB**	**K**		**Q**
D = Display		**BL** = Beacon light	**RGB** = Multicolor	**K** = IO-Link	**Blank** = No audible **A** = Audible	**Q** = 4-pin M12 integral QD

QD models require mating cordset



S100 Programmable Multi-Touch Display

- Integrate point-of-use operator input across up to five touch zones with haptic feedback in a low-profile, washdown-ready, 100 mm interface
- Show on-device instruction, status, counts, timers, and measurement values on a configurable alphanumeric display
- Make machine state, task progress, warnings, and required action immediately recognizable with audible alerts and 16 RGB LEDs

Description	Control	Connection	Model
100 mm Programmable Multi-Touch Display with LED Indication, Haptic Feedback, and Audible Alerts	IO-Link	4-pin M12 integral QD	**S100PTVD2WAKQ**



S22 Programmable Flush Mount Indicators

- Simplifies device replacement and installation, reduces wiring, and allows access to dynamic data
- Provides intuitive feedback via five animations and full access to custom colors, speeds, and intensities using remote configuration
- Rugged IP67/IP69K-rated polycarbonate construction withstands harsh environments, resisting impacts and reliably operating in high-pressure, high-temperature washdown

Series	Style	Input	Connection
S22	**P**	**K**	**Q**
	P = Programmable	**K** = IO-Link	**Q** = 5-pin M12 integral QD

QD models require mating cordset



K30 Programmable Indicators

- IO-Link models give full access to color, flashing, rotating, and dimming settings as well as advanced animations such as dynamic sequence mode and LED control
- Polycarbonate housing protects against impact and withstands high-pressure, high-temperature washdown to ensure reliable performance in challenging environments

Series	Style	Housing	Control	Connection
K30	**P**	**L**	**K**	**Q**
	P = Programmable	**L** = Dome	**K** = IO-Link	**Q** = 4-pin M12 integral QD **QP** = 150 mm PVC cable with 4-pin M12 QD

QD models require mating cordset



K50 Programmable Indicators

- Bright, uniform indicator light
- Fourteen color options including: green, red, yellow, blue, white, cyan, magenta
- IO-Link models give full access to color, flashing, rotating, and dimming settings as well as advanced animations such as dynamic sequence mode and LED control

Go-To Models with IO-Link

Series	Color and Input	Connection
K50PSL	**K**	**Q**
	K = IO-Link	**Q** = M12 integral QD

**Audible models not available in FDA grade material or compact
***Compact and integral QD models not available in FDA grade material

Encapsulated, Audible, and FDA Models with IO-Link

Series	Material	Color and Input	Audible Alarm**	Connection
K50L2		**RGBK**	**A1**	**Q**
K50L2 = Dome **K50CL2** = Compact***	**Blank** = Standard **F** = FDA grade	**RGBK** = RGB multicolor with IO-Link	**Blank** = No audible **A1** = Audible **AL1** = Loud audible **ALS** = Sealed audible	**Blank** = 2 m integral cable **Q** = M12 integral QD*** **QP** = 150 mm cable with M12 QD

QD models require mating cordset

Beacon Models with IO-Link

Series	Style	Housing	Control	Connection
K50	**P**	**BL**	**K**	**Q**
	P = Programmable	**BL** = Beacon	**K** = IO-Link	**Q** = M12 integral QD

QD models require mating cordset



K90 Programmable Indicators

- Large, bright, uniform indicator light
- Seven default colors in one device (green, red, yellow, blue, white, cyan, magenta)
- IO-Link models provide access to full color, flashing, and dimming controls as well as advanced animations for millions of color possibilities

Series	Style	Housing	Control	Connection
K90	**P**	**L**	**K**	**Q**
	P = Programmable	**L** = Dome	**K** = IO-Link	**Q** = 5-pin M12 integral QD **QP** = 150 mm cable with M12 QD

QD models require mating cordset



LCA130 Andon Light Control Boxes

- Make informed decisions that boost productivity by using data collected from IO-Link models to pinpoint delays and performance issues
- Customize status LED colors, flashing, and intensity settings to enhance operator interaction in assembly, workstation, and other manufacturing applications
- Mimic the connected light's status for added indication with programmed status LEDs
- Reduce installation time with plug-and-play M12 connections that do not require hard-wiring

Series	Activation Method	Number of Touch Inputs	Control	Input Connection
LCA130	**T**	**4**	**K**	**Q**
	T = Touch	**3** **4** **5**	**K** = IO-Link	**Q** = 5-pin M12 integral male quick-disconnect (5-pin female output for 4 input, 8-pin female output for 5 input)

QD models require mating cordset



S22 Programmable Flush Mount Touch Button Indicators

- Touch buttons enable reliable, effortless, accurate operation, with capacitive touch technology that works with bare or gloved hands and requires no physical force, reducing hand, wrist, and arm strain
- Two-way touch-button communication clarifies processes and improves operator accuracy, speed, and precision
- Solid-state design eliminates maintenance, eliminating mechanical wear points and enabling a long, reliable operational lifespan

Series	Style	Input	Connection
S22	**PT**	**K**	**Q**
	P = Programmable Touch Button	**K** = IO-Link	**Q** = 5-pin M12 integral QD

QD models require mating cordset



K30 Programmable Touch Button Indicators

- Excellent immunity to false triggering by water spray, detergents, oils, and other foreign materials
- Up to fourteen colors in one device
- Devices are completely self-contained: No controller needed
- Ergonomically designed to eliminate hand, wrist, and arm stresses associated with repeated switch operation: No physical force required to operate

Series	Style	Activation Method	Control	Connection
K30	**P**	**T**	**K**	**Q**
	P = Programmable	**T** = Touch	**K** = IO-Link	**Q** = 4-pin M12 integral QD **QP** = 150 mm PVC cable with 4-pin M12 QD

QD models require mating cordset



K50 Programmable Touch Button Indicators

- Bright LED indicators combined with touch-activated switching capabilities
- Advanced touch technology allows for high immunity to water while still working with gloves
- Up to fourteen color variations in one device
- Mechanical button models available for traditional, tactile feedback
- Programmable using Banner's IO-Link system for customization of colors and animation

Go-To Models with IO-Link

Series	Color and Input	Connection
K50PST	**K**	**Q**
	K = IO-Link	**Q** = M12 integral QD

Encapsulated, Compact, and FDA Models with IO-Link

Series	Style	Activation Method	Housing	Control	Connection
K50	**P**	**T**	**C**	**K**	**Q**
	P = Programmable	**T** = Touch **TF** = Touch, FDA grade **TV** = Touch, vibration feedback **TFV** = Touch, FDA grade, vibration feedback	**C** = Compact* **Blank** = Standard dome	**K** = IO-Link	**Q** = 4-pin M12 integral QD** **QP** = 150 mm cable with M12 QD

*Not available in FDA grade material or with vibration feedback
**Not available in FDA grade material

QD models require mating cordset

Touchless Button Models with IO-Link

Series	Style	Color and Input	Connection
K50	**PSAF1000**	**K**	**Q**
	PSAF1000 = Adjustable field sensor	**K** = IO-Link	**Q** = M12 integral QD



K50 Programmable Touch with Audible Indicators

- Integral audible alarm has fourteen tones with customization and intensity control
- Excellent immunity to false triggering by water spray, detergents, oils, and other foreign materials
- Integral audible can be used as standalone indicator or as an input to touch conditions
- Can be actuated with bare hands or gloves
- Compact models available for lower profile applications
- IO-Link models give full access to color, flashing, rotating, and dimming settings as well as advanced animations such as dynamic sequence mode and LED control

Series	Style	Activation Method	Housing	Control	Audible	Connection
K50	**P**	**T**	**C**	**K**	**A**	**QP**
	P = Programmable	**T** = Touch	**C** = Compact **Blank** = Standard dome	**K** = IO-Link	**A** = Audible	**Q** = 4-pin M12 integral QD **QP** = 150 mm PVC cable with 4-pin M12 QD

QD models require mating cordset

Connect Your Devices

IO-Link products typically incorporate M12 connectors, which are the industry standard for joining devices. IO-Link allows you to standardize on unshielded M12 connectivity which is readily available and cost effective. Any device that does not have an M12 connector can be easily converted using field-wireable M12 connectors.



M12 Signal Cordsets

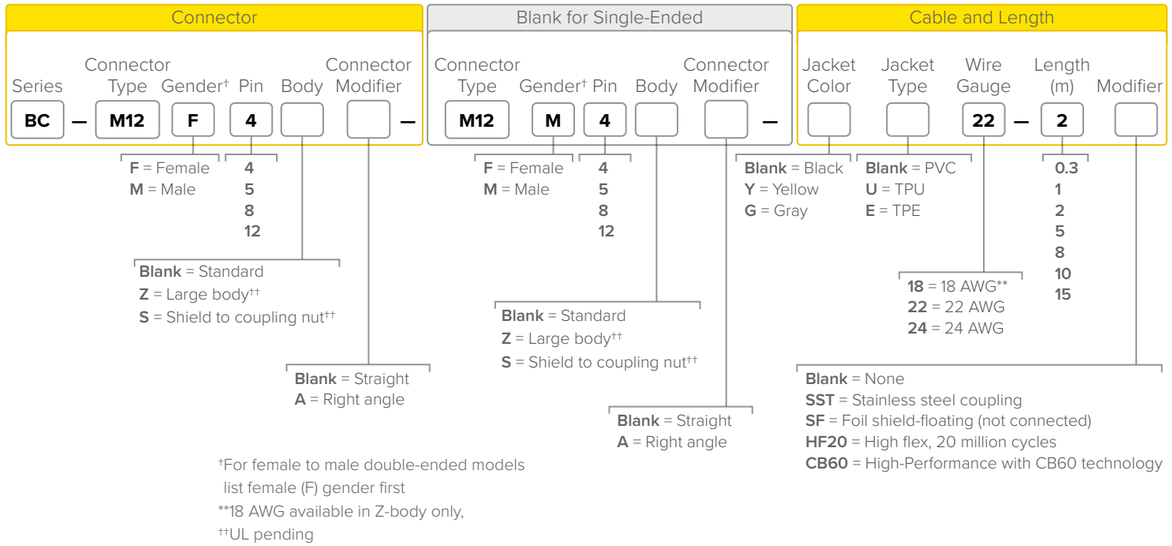

†For female to male double-ended models list female (F) gender first
**18 AWG available in Z-body only,
††UL pending

Vibration Shock	Meets IEC 60068-2-6 requirements	**Temperature**	-40° to +70 °C
Mechanical Shock	Meets IEC 60068-2-27 requirements	**Environmental Rating**	IP66, IP67, IP68, NEMA 1, UL Type 1
		Certifications	CE cULus LISTED



4-Pin PVC A-Code (Voltage: 30 V DC, Current: 4 A, AWG: 22, Cable ø: 5.2 mm)

Description	Length	Straight	Right Angle
Female QD to Flying Leads	2 m	**BC-M12F4-22-2**	**BC-M12F4A-22-2**
	5 m	**BC-M12F4-22-5**	**BC-M12F4A-22-5**
	10 m	**BC-M12F4-22-10**	**BC-M12F4A-22-10**
Male QD to Flying Leads	2 m	**BC-M12M4-22-2**	—
	5 m	**BC-M12M4-22-5**	—
	10 m	**BC-M12M4-22-10**	—
Description	**Length**	**Straight/Straight** (Female/Male)	**Straight/Right Angle** (Female/Male)
Double-Ended	2 m	**BC-M12F4-M12M4-22-2**	**BC-M12F4-M12M4A-22-2**
	5 m	**BC-M12F4-M12M4-22-5**	**BC-M12F4-M12M4A-22-5**
	10 m	**BC-M12F4-M12M4-22-10**	**BC-M12F4-M12M4A-22-10**

Pinout

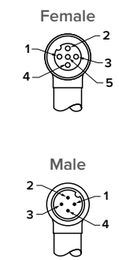

1 = Brown
2 = White
3 = Blue
4 = Black
5 = Unused

5-Pin PVC A-Code (Voltage: 30 V DC, Current: 4 A, AWG: 22, Cable ø: 5.6 mm)



Description	Length	Straight	Right Angle
Female QD to Flying Leads	2 m	BC-M12F5-22-2	BC-M12F5A-22-2
	5 m	BC-M12F5-22-5	BC-M12F5A-22-5
	10 m	BC-M12F5-22-10	BC-M12F5A-22-10
Male QD to Flying Leads	2 m	BC-M12M5-22-2	BC-M12M5A-22-2
	5 m	BC-M12M5-22-5	BC-M12M5A-22-5
	10 m	BC-M12M5-22-10	BC-M12M5A-22-10
Description	**Length**	**Straight/Straight** (Female/Male)	**Straight/Right Angle**
Double-Ended	2 m	BC-M12F5-M12M5-22-2	BC-M12F5-M12M5A-22-2
	5 m	BC-M12F5-M12M5-22-5	BC-M12F5-M12M5A-22-5
	10 m	BC-M12F5-M12M5-22-10	BC-M12F5-M12M5A-22-10

Pinout

Female

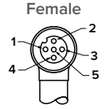

Male

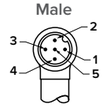

1 = Brown
2 = White
3 = Blue
4 = Black
5 = Gray

Round QD Splitters

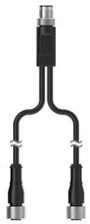

S15YA24-M124-M124-0.2M
Non-parallel 4-Pin Wiring



S15YA4-M124-M124-0.2M
Non-parallel 4-Pin Wiring



S15YS-M124-M12M4M125-0.2
Non-parallel 4-Pin Wiring



4-Pin A-Code

(Voltage: 30 V DC/AC, Current: 4 A, AWG: 4 x 22, Cable ø: 5.2 mm, Temperature: –40 °C to +70 °C, Environmental Rating: IP67)

Cable Lengths					
Trunk (Male)	**Branches** (Female)	Straight	Right Angle	Wiring	Pinout
No Trunk/ Integral M12 QD	0.2 m	**S15YA24-M124-M124-0.2M**	—	See above	Male
	0.2 m	**S15YA4-M124-M124-0.2M**	—	Discrete	Female
	0.2 m	**S15YS-M124-M12M4M125-0.2**	—	See above	Male / Female

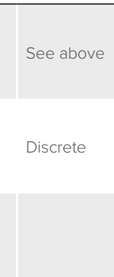

RJ45 Data Cordsets

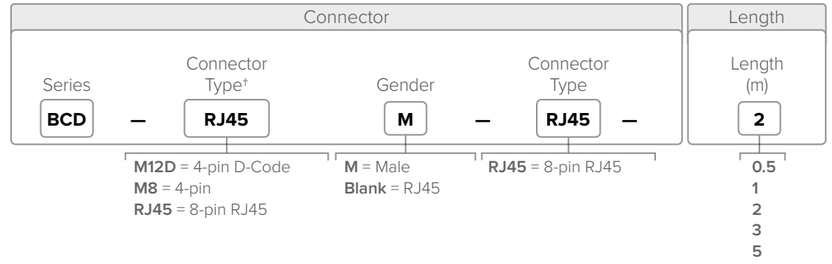

Note: All cordsets are shielded to coupling nut

†For M12/M8 to RJ45 double-ended models list M12/M8 connector first

Cable Jacket	PVC	**Environmental Rating**	IP20
Temperature	-20° to +70 °C	**Certifications**	CE cULus LISTED

4-Pin D-Code (Voltage: 60 V DC/AC, Current: 1.5 A, AWG: 22, M12 Cable ø: 7 mm, M8 Cable ø: 5.8 mm)



Description	Length	Straight
M12 Double-Ended Male QD to RJ45	2 m	BCD-M12DM-RJ45-2
	5 m	BCD-M12DM-RJ45-5
	10 m	BCD-M12DM-RJ45-10
Description	**Length**	**Straight/Straight** (Female/Male)
Double-Ended RJ45	2 m	BCD-RJ45-RJ45-2
	5 m	BCD-RJ45-RJ45-5
	10 m	BCD-RJ45-RJ45-10



Pinout

M12 Male



M12 RJ45

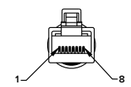

RJ45

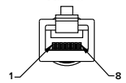

1 = White/orange
2 = Orange
3 = White/green
4 = Green

M12 Field Wireable

Terminal	Screw	**Temperature**	-40° to +85 °C
		Environmental Rating	IP68

4-Pin (Voltage: 60 V DC/AC, Current: 4 A, Max AWG: 22, Cable ø: 4-6 mm)

	Description	Straight	Right Angle	Pinout
	Female Screw Terminal	BFW-M12F4-6X	BFW-M12F4A-6X	Female 
	Male Screw Terminal	BFW-M12M4-6X	BFW-M12M4A-6X	Male 

5-Pin (Voltage: 60 V DC/AC, Current: 4 A, Max AWG: 22, Cable ø: 4-6 mm)

	Description	Straight	Right Angle	Pinout
	Female Screw Terminal	BFW-M12F5-6X	BFW-M12F5A-6X	Female 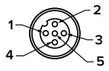
	Male Screw Terminal	BFW-M12M5-6X	BFW-M12M5A-6X	Male 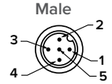

M12 Field Wireable Slide Lock

Terminal	Slide Lock	**Temperature**	-40° to +85 °C
		Environmental Rating	IP68


Slide Lock Terminal

4-Pin (Voltage: 60 V DC/AC, Current: 4 A, AWG: 20-24, Cable ø: 4-6 mm)

	Description	Straight	Right Angle	Pinout
	Female Slide Lock Terminal	BFW-M12F4-6SL	BFW-M12F4A-6SL	Female 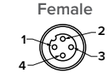
	Male Slide Lock Terminal	BFW-M12M4-6SL	BFWM12M4A-6SL	Male 

5-Pin (Voltage: 60 V DC/AC, Current: 4 A, AWG: 20-24, Cable ø: 4-6 mm)

	Description	Straight	Right Angle	Pinout
	Female Slide Lock Terminal	BFW-M12F5-6SL	BFW-M12F5A-6SL	Female 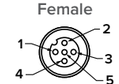
	Male Slide Lock Terminal	BFW-M12M5-6SL	BFWM12M5A-6SL	Male 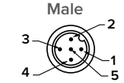

Accessories


LMBM12MAG
Attaches to M12 cordset end (magnetic)


BWA-M12CAB-MAG
Attaches to M12 cable (magnetic)


LMBM12SP
Attaches to M12 cordset end


ACC-CAP M12-10
Protective end cap


LMBS15MAG
Attaches to S15C (magnetic)


LMBS15SP
Attaches to S15C

IO-Link® HUBS & CONVERTERS

Convert to a Unified Protocol

Legacy devices are common in most industrial settings. These devices have data outputs that include discrete NPN/PNP signals, 4–20 mA signals, 0–10 V signals, and many more types. You can incorporate all these disparate signals into your IO-Link system with Banner's extensive line of IO-Link converters and hubs. After the physical connections are made, the next step is to get all the devices speaking the same language. With Banner IO-Link products, all these signals can be quickly converted to a unified communications protocol. This enables facilities to build a flexible IO-Link network. Many of Banner's IO-Link converters are the size of an AA battery, are simply inserted inline via an M12 connector, and can begin converting signals the instant they are installed.





S15C Converter

Break free from protocol limitations with S15C in-line converters. S15C converters take various types of signals such as discrete, analog, and others and convert these signals to smart protocols like IO-Link. This makes it easy to incorporate existing legacy sensors into a standard protocol to enable process monitoring. S15C Converters are designed to connect directly to a sensor, indicator, or other device and begin operating immediately, fitting seamlessly into your factory applications.

- Previously incompatible devices can be connected to a smart system
- Compact form factor
- Rugged over-molded design meets IP65, IP67, and IP68 standards
- Simple M12 connection for easy installation wherever needed in the circuit

S15C Converter IO-Link®

Easily converts signals like 4–20 mA analog to IO-Link without any setup required

ANALOG
PWM / PFM
Discrete (NPN/PNP)
Modbus
IO-Link®

S15C	–	I	–	KQ

I = 4–20 mA
U = 0–10 V DC
B21 = Discrete Input/Output
MGN = Modbus
MGP = Modbus GPS
MVT= Modbus V/T Sensor
MEZ = EZ-ARRAY
MTH = Modbus T/H Sensor
MUL = Modbus Ultrasonic Sensor
RTD = RTD Temperature Sensor



R45C IO-Link to Analog Out Converter

- Compact analog to IO-Link device converter outputs an analog value, voltage, or current, as presented by the IO-Link Master
- Rugged over-molded design meets IP65, IP67, and IP68 standards
- Connects directly to a sensor or anywhere in-line for ease of use

Housing	Function		Male		Female 1		Connector
R45	C	–	K	–	I		Q

C = Converter
K = IO-Link
I = Analog current out
U = Analog voltage out
Q = Integral M12 quick disconnect

IO-Link® HUBS & CONVERTERS



R45C IO-Link to Dual Analog Input-Output Converter

- Compact IO-Link device to analog converter that outputs an analog value, voltage, or current, as presented by the IO-Link master
- The converter also connects to an analog source, voltage or current, and outputs the value to the IO-Link master and as a representative PFM output
- Rugged over-molded design meets IP65, IP67, and IP68 standards
- Connects directly to a sensor or anywhere in-line for ease of use

Housing	Function		Male	Female 1 and 2	Connector
R45	**C**	–	**K**	**II — II**	**Q**
	C = Converter		**K** = IO-Link	**II–II** = Analog 1 current in/out, Analog 2 current in/out **UU–UU** = Analog 1 voltage in/out, Analog 2 voltage in/out	**Q** = Integral M12 quick disconnect



R130C Discrete IO-Link Hub

- Cost-efficiently integrate up to 16 devices into an IO-Link system
- Simplify wiring and installation with M12 QD cables
- Minimize the size of the control panel by locating I/O remotely on the machine, closer to sensors and other devices
- Provide power to lighting products and other devices that draw higher current with 4 amps shared across ports
- Streamline troubleshooting with I/O status LEDs viewable from top or side of device

Housing	Function		Converter		Control	Connector
R130	**C**	–	**8P22**	–	**K**	**Q**
	C = Converter		**8P22** = 8 ports, PNP with 2 inputs/outputs per port		**K** = IO-Link	**Q** = M12 integral quick disconnect



R90C Discrete IO-Link Hub

- Connect two discrete signals to each of the unique ports, providing access to monitoring and configuring those ports with an IO-Link Master
- Host mirroring is available where a selected port input/output discrete signal can be routed to Pin 2 (male) on the PLC/Host connection

Housing	Function		Converter		Control	Connector
R90	**C**	–	**4B21**	–	**K**	**Q**
	C = Converter		**4B21** = 4 port, bimodal, 2 inputs or 1 input/1 output per port		**K** = IO-Link	**Q** = M12 Integral quick disconnect



R95C Discrete IO-Link Hub

- Connect two discrete signals to each of the unique ports, providing access to monitoring and configuring those ports with an IO-Link Master
- Host mirroring is available where a selected port input/output discrete signal can be routed to Pin 2 (male) on the PLC/Host connection

Housing	Function		Converter		Control	Connector
R95	**C**	–	**8B21**	–	**K**	**Q**
R95 = 8-port	**C** = Converter		**8B21** = 8 port, bimodal, 2 inputs or 1 input/1 output per port **8B22** = 8 port, bimodal, 2 inputs/outputs per port		**K** = IO-Link	**Q** = M12 Integral quick disconnect



R95C Discrete and Analog Input-Output IO-Link Hub

- Compact IO-Link device converter with the ability to send 4 ports of discrete input and 4 ports of analog input data (voltage or current) to an IO-Link Master
- The IO-Link Master Process Data Output can also output discrete values and analog outputs (voltage or current) through any of the respective sets of 4 ports
- Rugged over-molded design meets IP65, IP67, and IP68

Housing	Function		Converter		Control	Connector
R95	**C**	–	**4B4UI**	–	**K**	**Q**
	C = Converter		**4B4UI** = 4-port, bimodal, 2 inputs/outputs per port 4 port, analog, 4 inputs and 4 outputs.		**K** = IO-Link	**Q** = M12 integral quick disconnect



R95C Analog Input to IO-Link Hub

- Compact analog to IO-Link device converter that receives an analog source and outputs the value to the IO-Link master
- R95C IO-Link hubs are a quick, easy, and economical way to integrate non-IO-Link devices into an IO-Link system
- Rugged over-molded design meets IP65, IP67, and IP68 standards
- Connects directly to a sensor or anywhere in-line for ease of use

Housing	Function		Converter		Control	Connector
R95	**C**	–	**8UI**	–	**K**	**Q**
	C = Converter		**8UI** = 8 port, analog, 1 input per port		**K** = IO-Link	**Q** = M12 Integral quick disconnect

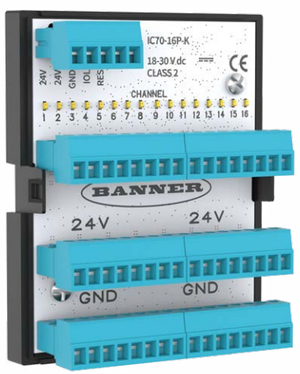

IC70 In-Cabinet IO-Link Hub

- Save space with a compact, DIN-rail mountable design
- Increase system flexibility with configurable input/output channels
- Reduce wiring and PLC logic with built-in delays and port mirroring
- Speed up troubleshooting with real-time status LEDs

Description	Connections	Model
16-Channel PNP IO-Link Hub	Screw terminals	**IC70-16P-K**
16-Channel NPN IO-Link Hub		**IC70-16N-K**

Integrate Analog Devices Into Your IO-Link System

Banner's R95C 8-port Analog Input IO-Link Hub simplifies adding analog devices to an IO-Link system. It takes up to eight analog signal inputs (either current or voltage) and consolidates them into one IO-Link data stream. The R95C reduces the need for shielded cabling, using simple 4-wire M12 cordsets and connections to save installation time and hardware costs, while eliminating the need for expensive PLC analog input cards.

R95C System Diagram

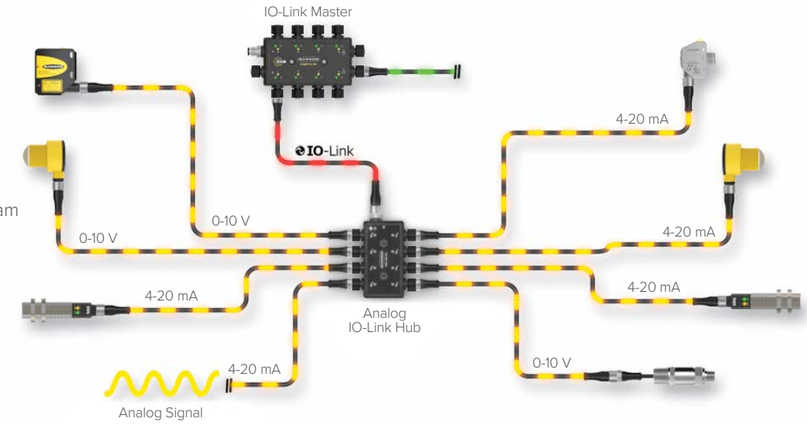

Accessories



SMBR90S
Mounting Bracket (use multiples to stack)



SMBR95RA
Right-angle Mounting Bracket



LMBM12MAG
Attaches to M12 cordset end (magnetic)



BWA-M12CAB-MAG
Attaches to M12 cable (magnetic)



LMBM12SP
Attaches to M12 cordset end



LMBS15MAG
Attaches to S15C (magnetic)



LMBS15SP
Attaches to S15C

IO-Link® MASTERS

Build Your Network

Banner IO-Link masters serve as the gateway for the connection of IO-Link devices, including sensors, lighting products, IO-Link Hubs, and more. Banner IO-Link masters are the most compact in the industry and enable users to flexibly send IO-Link data where it needs to go, whether it's to a PLC, HMI, SCADA or cloud platform such as Banner CDS.







DXMR90-4K Multiprotocol IO-Link Master



The DXMR90-4K IO-Link Master houses a processor that receives signals from sensors and other connected devices through four dedicated IO-Link ports. As a centralized hub, the DXMR90 combines all these signals into one unified stream of insightful data, which can be exported via industrial Ethernet protocols. The controller also has advanced programmability via ScriptBasic and action rules that allows facilities to use the IO-Link master as a controller in a standalone application, eliminating the need for a PLC. The DXMR90-4K IO-Link Master also has a Modbus RTU client port for expanding your connection possibilities.

Ethernet Connection	Master Connections	Other Connections	Models
One female M12 D-Code Ethernet connector	Four female M12 connections for IO-Link	One male M12 (Port 0) for incoming power and Modbus RS-485, one female M12 for daisy chaining Port 0 signals	**DXMR90-4K**

Connect More Devices with Ease

The DXMR90-4K allows for the connection and control of up to four IO-Link devices, replacing multiple traditionally expensive input cards. The DXMR90-4K can communicate with higher-level control systems via EtherNet/IP, Modbus/TCP, and PROFINET. This IO-Link master also has an additional serial port that allows for the connection of more devices for maximum flexibility.

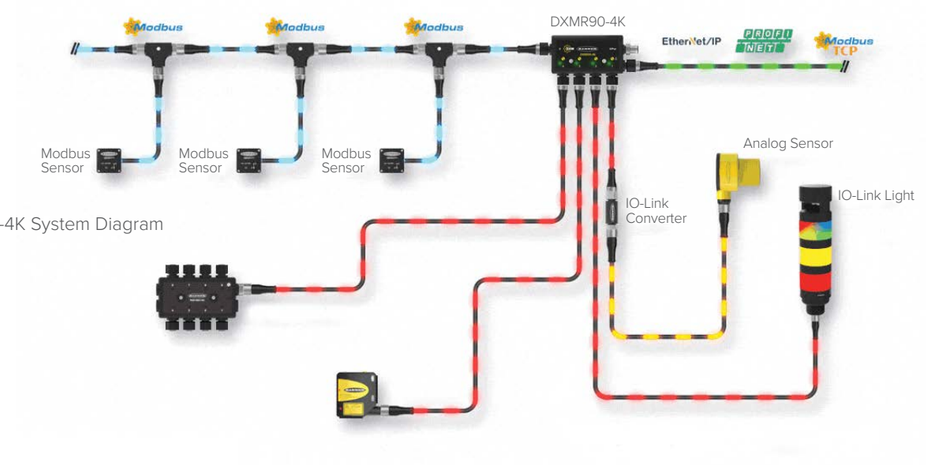

DXMR90-4K System Diagram

Accessories



SMBR90S
Mounting Bracket
(use multiples to stack)



SMBR90RA
Mounting Bracket



SMBR90RADIN
DIN Rail
Mounting Bracket



SMBR90RAMAG
Magnetic
Mounting Bracket



PSW-24-1
Power Supply



STP-M12D-406
Ethernet Cordset

IO-Link® MASTERS



DXMR110-8K Multiprotocol IO-Link Master

- Local control or connectivity with automation protocols, including EtherNet/IP, Modbus/TCP, and PROFINET
- Logic processing and problem-solving capable of deploying solutions to process and control data from multiple devices
- IP67 housing simplifies installation in any location by eliminating the need for a control cabinet
- Consolidation of cable runs to minimize cabling and associated weight, especially in weight-critical applications such as robotics
- Flexible and customizable: Expanded internal logic controller with action rules and ScriptBasic programming

Ethernet Connection	IO-Link Master Connections	Other Connections	Models
Two female M12 D-Code Ethernet connectors for daisy chaining and communication to a higher-level control system	Eight female M12 connections for IO-Link	One male M12 for incoming power, one female M12 for daisy chaining power	**DXMR110-8K**

Streamline Your IO-Link Network

The compact DXMR110-8K allows for the connection and control of up to eight IO-Link devices, such as sensors, indicator lights, or IO-Link hubs, without the need for multiple traditionally expensive input cards. The DXMR110-8K can communicate with higher-level control systems via EtherNet/IP, Modbus/TCP, and PROFINET. The DXMR110-8K also has the ability to push IO-Link data to cloud platforms.

DXMR110-8K System Diagram

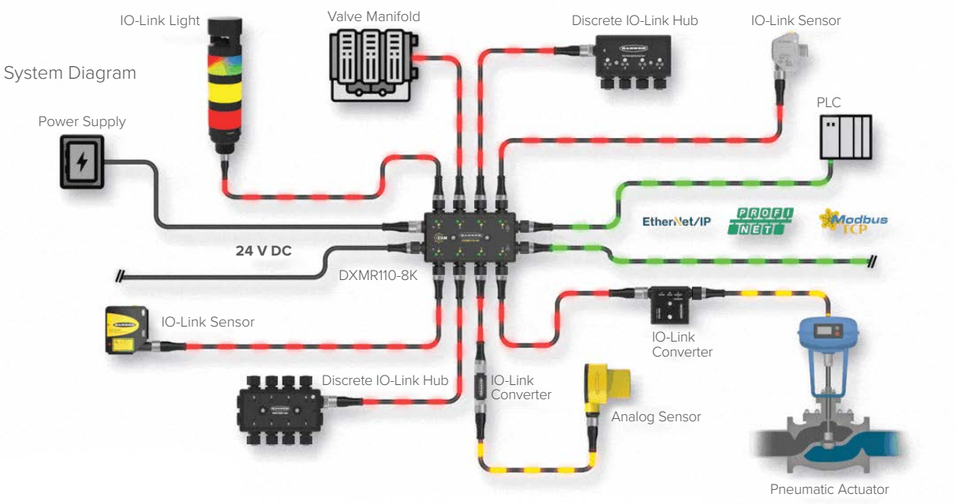

No IO-Link Device? No problem. Our expansive line of converters can adapt most industrial devices to IO-Link quickly, giving you the flexibility to build the system you need.



DXMR190-8K Top-Exit IO-Link Master

- Two A-code or L-code pass-through power ports (depending on model) can share power with connected devices; high-amp L-code power allows more devices to be daisy-chained, simplifying cabling and installation
- Flexible configuration on each of eight A-code M12 IO-Link ports allows connection to either an IO-Link or discrete device
- Two D-code M12 multiprotocol ports with Ethernet pass-through minimize wiring and related costs, enabling easy integration into control systems via EtherNet/IP™, PROFINET®, or Modbus®

Ethernet Connections	IO-Link Master Connections	Power Connections	Max. Total Current	Models
2 x Female M12 D-Code Ethernet (for daisy chaining and communication to a higher-level control system)	8 x Female M12	1 x Male A-Code M12 (in) 1 x Female A-Code M12 (out)	4 A	**DXMR190-8K**
		1 x Male L-Code M12 (in) 1 x Female L-Code M12 (out)	8 A	**DXMR190-L-8K**

R45C IO-Link Master with Modbus RTU Interface



- Connects two IO-Link devices and provides access via Modbus RTU interface
- Rugged design: Easy installation with no assembly or individual wiring required
- 5-pin M12 male quick-disconnects
- Two 4-pin M12 female quick-disconnects
- Built-in indication for two IO-Link master ports
- Built-in indication for Modbus RTU connection status
- Rugged over-molded design meets IP65, IP67, and IP68 standards

Housing	Function		Converter		Connection	Connector
R45	**C**	–	**2K**	–	**M**	**Q**
	C = Converter		**2K** = 2-port IO-Link Master (female)		**M** = Modbus Server Connection (male)	**Q** = M12 Integral QD



R90C IO-Link Master with Modbus RTU Interface

The R90C 4-Port IO-Link Master connects to four IO-Link devices and provides access to IO-Link data and functionality via a Modbus RTU connection. Modbus registers allow for access to both IO-Link devices and their functions:

- Process Data In
- Process Data Out
- Connected device information
- ISDU data
- Discrete I/O configuration
- IO-Link events
- Data storage
- SIO mode

Housing	Function		Converter		Connection	Connector
R90	**C**	–	**4K**	–	**M**	**Q**
	C = Converter		**4K** = 4-port IO-Link Master (female)		**M** = Modbus Server Connection (male)	**Q** = M12 Integral Quick Disconnect (female)

IO-Link® CONSUME DATA

Consume Data to Optimize Productivity

IO-Link data is typically sent to a higher-level control system or a supervisory device. This can be a programmable logic controller (PLC), a distributed control system (DCS), a human-machine interface (HMI), a cloud dashboard such as Banner Cloud Data Services, or any other compatible device that can process and interpret the IO-Link data. The specific destination depends on the system architecture and the intended application of the IO-Link communication.



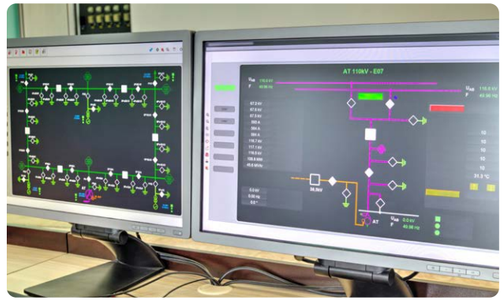



Monitor Your Equipment from Anywhere

The Cloud Data Services software is a web-based platform that allows users to access, store, protect, and export critical data collected by Banner Snap Signal solutions. The software complements the Snap Signal portfolio and provides customers with complete end-to-end IIoT solutions to solve the industrial market's most pressing problems.

Banner Cloud Data Services (CDS)

- The CDS platform is more than a dashboard. With analytics and visualization tools, the software delivers actionable insights that allow you to solve real challenges on the factory floor.
- Users can remotely access data anytime and anywhere using an internet-connected device. In addition, they can define parameters to control when to receive notifications via email or SMS message. On-demand visibility and real-time alerts allow remote monitoring and diagnosis of systems quickly.
- Predictive maintenance is a key capability of Banner's IIoT solutions. The CDS platform helps you use device data to predict machine maintenance requirements, which reduces unplanned downtime, increases mean time between failure (MTBF), and reduces maintenance costs.
- Data transmissions from your controller are secured via several layers of protection including a proprietary communication protocol and generic data transfer. In addition, data transmissions from the controller to the cloud are securely encrypted.

HMI, SCADA, PLC, or Other Monitoring Platforms

- IO-Link's unique open architecture allows you to send data where you need it.
- Banner's IO-Link masters support EtherNet/IP®, Modbus/TCP, PROFINET, and Modbus RTU, so that data can be interfaced with industrial systems flexibly.



Visit **bannercds.com** for more information

Smarter Automation. Better Solutions.™

Banner Engineering designs and manufactures industrial automation products including sensors and measurement devices; lighting, indicators, and displays; connectivity; condition monitoring solutions; machine safety products; industrial wireless systems; remote I/O; plus barcode scanners and machine vision. By listening to customers and engineering solutions that remove production constraints so they can achieve operational goals, Banner is an integral part of making many of the things we use every day, from food and medicine to cars and electronics. In fact, a high-quality, reliable Banner product is installed somewhere around the world every two seconds. Headquartered in Minneapolis since 1966, Banner is an industry leader with more than 10,000 products, operations on five continents, and a worldwide team of more than 5,500 employees and partners. Our dedication to innovation and personable service makes Banner a trusted source of smart automation technologies to customers around the globe.



SCAN ME

BANNER®

1-888-373-6767 • bannerengineering.com

PN B_51828679 rev. E
© 2026 Banner Engineering Corp. Mpls, MN USA