EZ-LIGHT K90L

Features

Large one to five color indicator with flashing input control



- Bright, uniform indicator light
- All models have flashing input control
- Models are available with up to five colors in one device
- Rugged IP67-rated design
- 12 V DC to 30 V DC operation

Models

Model	No. of Colors	Colors	Input	Connection
K90LGPQ	1	Green	PNP	Integral 5-pin M12 male quick-disconnect connector
K90LRPQ		Red		
K90LYPQ		Yellow		
K90LBPQ		Blue		
K90LWPQ		White		
K90LGNQ		Green	NPN	
K90LRNQ		Red		
K90LYNQ		Yellow		
K90LBNQ		Blue		
K90LWNQ		White		

Model	No. of Colors	Colors	Input	Connection
K90LGRPQ	2	Green, Red	PNP	Integral 5-pin M12 male quick-disconnect connector
K90LGYRPQ	3	Green, Red, Yellow		
K90LBGYRPQ	4	Blue, Green, Yellow, Red		Integral 8-pin M12 male quick-disconnect connector
K90LWBGYRPQ	5	White, Blue, Green, Yellow, Red		
K90LGRNQ	2	Green, Red	NPN	Integral 5-pin M12 male quick-disconnect connector
K90LGYRNQ	3	Green, Red, Yellow		
K90LBGYRNQ	4	Blue, Green, Yellow, Red		Integral 8-pin M12 male quick-disconnect connector
K90LWBGYRNQ	5	White, Blue, Green, Yellow, Red		

Integral quick-disconnect connector models are listed; a mating cordset is required (see "Accessories" on page 4).

- To order the 150 mm (5.9 in) PVC cable with quick-disconnect connector models, replace **Q** with **QP** in the model number, for example, K90LGYRQP.
- To order the 2 m (6.5 ft) cable models, omit the suffix **Q** in the model number, for example, K90LGYR.

Washdown Silicone Cover WC-K90

Washdown Cover Model	Description
WC-K90	FDA-grade silicone cover

Original Instructions
26-Feb-26

© Banner Engineering Corp. All rights reserved.
www.bannerengineering.com

181765
p/n: 181765 Rev. G

ПРОМЭЛЕКТРОНИКА/ sales@prom-elec.com

Installing the Silicone Cover

To properly install the FDA-grade silicone cover and achieve an IP69 rating, follow these instructions.

1. Turn the cover inside out.
2. Place the cover on top of the indicator.
3. Roll the cover onto the indicator.
4. Continue rolling the cover down, around the base of the indicator, until the entire light is covered.
5. Mount the indicator and cover assembly to a bracket wide enough to cover the base of the assembly. The cover should be clamped firmly between the indicator and the bracket.

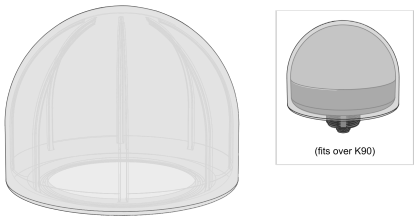

NOTE: The FDA-grade silicone cover withstands high pressure, high-temperature washdown, and increases the product rating to IEC IP69. The cover is ECOLAB® certified to withstand aggressive cleaning procedures with chemicals used in the food processing industry.

Wiring

5-pin PNP Input

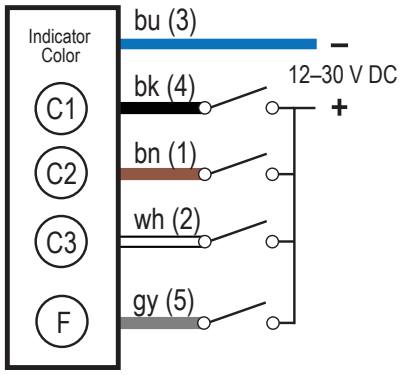

5-Pin NPN Input

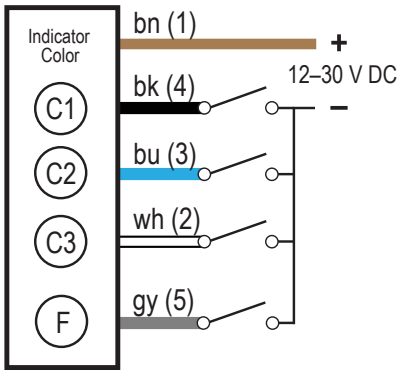

Key

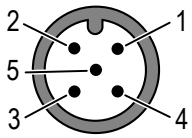

1 = Brown
2 = White
3 = Blue
4 = Black
5 = Gray
Gray wire (flashing input)

8-pin PNP Input

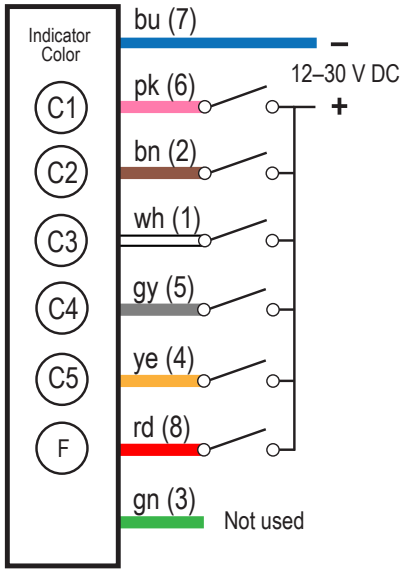

8-Pin NPN Input

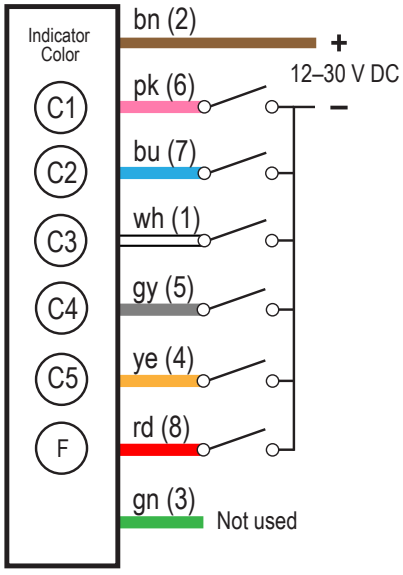

Key

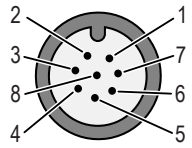

1 = White
2 = Brown
3 = Green
4 = Yellow
5 = Gray
6 = Pink
7 = Blue
8 = Red
Red wire (flashing input); the green wire is not used.

© Banner Engineering Corp. All rights reserved.
www.bannerengineering.com

Specifications

Supply Voltage and Current

12 V DC to 30 V DC
475 mA maximum at 12 V DC
175 mA maximum at 30 V DC

Supply Protection Circuitry

Protected against reverse polarity and transient voltages

Input Response Time

75 ms maximum

Adjustments

1.6 Hz flash rate via flash input wire

Connections

Integral 5-pin M12 male quick-disconnect connector; Integral 8-pin M12 male quick-disconnect connector; 150 mm (6 in) PVC-jacketed cable with a 5-pin M12 male quick-disconnect connector; 150 mm (6 in) PVC-jacketed cable with an 8-pin M12 male quick-disconnect connector; or 2 m (6.5 ft) unterminated 3-wire PVC-jacketed cable depending on the model

Construction

Base and dome: Polycarbonate

Environmental Rating

IP67; Enclosure UL Type 4X, 13

Vibration and Mechanical Shock

All models meet MIL-STD-202F, Method 201A (Vibration: 10 Hz to 60 Hz maximum, 0.06 inch (1.52 mm) double amplitude, 10G maximum acceleration) requirements. Also meets IEC 60947-5-2 (Shock: 30G 11 ms duration, half sine wave) requirements.

Operating Conditions

–40 °C to +50 °C (–40 °F to +122 °F)

Certifications

Banner Engineering BV
Park Lane, Culliganlaan 2F bus 3
1831 Diegem, BELGIUM

c UL us LISTED

Light Characteristics

Color	Typical Wavelength or Color Temperature	Typical Intensity
Red	625 nm	65 lumens
Yellow	590 nm	35 lumens
Green	525 nm	150 lumens
Blue	470 nm	55 lumens
White	6000K to 7100K	200 lumens

Indicators

1 to 5 colors, depending on the model
Only one color can be on at a time. The higher color number overrides the lower color number.

Required Overcurrent Protection

WARNING: Electrical connections must be made by qualified personnel in accordance with local and national electrical codes and regulations.

Overcurrent protection is required to be provided by end product application per the supplied table.
Overcurrent protection may be provided with external fusing or via Current Limiting, Class 2 Power Supply.
Supply wiring leads < 24 AWG shall not be spliced.
For additional product support, go to www.bannerengineering.com.

Supply Wiring (AWG)	Required Overcurrent Protection (A)	Supply Wiring (AWG)	Required Overcurrent Protection (A)
20	5.0	26	1.0
22	3.0	28	0.8
24	2.0	30	0.5

Dimensions

All measurements are listed in millimeters [inches], unless noted otherwise. The measurements provided are subject to change.

Standard Model

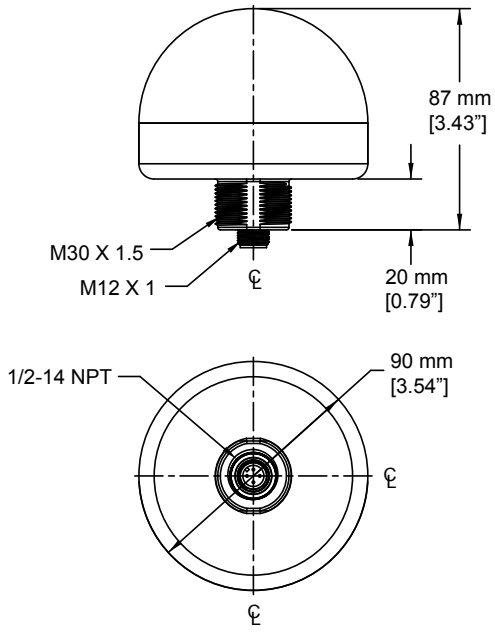

Model with Washdown Cover

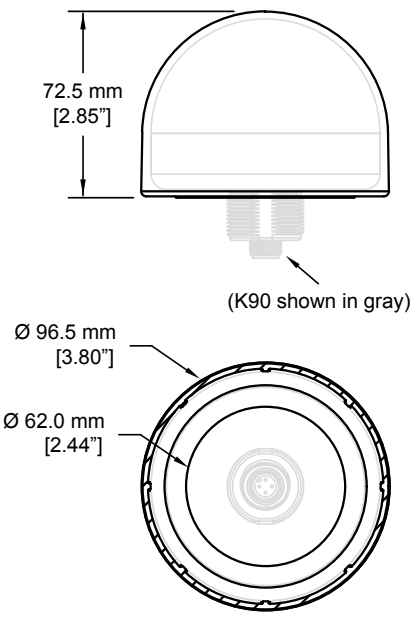

© Banner Engineering Corp. All rights reserved.
www.bannerengineering.com

Accessories

Cordsets

5-Pin Single-Ended M12 Female Cordsets				
Model	**Length**	**Style**	**Dimensions**	**Pinout (Female)**
MQDC1-501.5	0.5 m (1.5 ft)	Straight	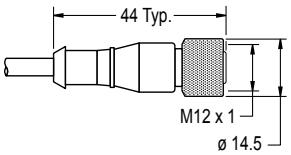	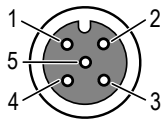 1 = Brown 2 = White 3 = Blue 4 = Black 5 = Gray
MQDC1-503	0.9 m (2.9 ft)			
MQDC1-506	2 m (6.5 ft)			
MQDC1-515	5 m (16.4 ft)			
MQDC1-530	9 m (29.5 ft)			
MQDC1-560	18 m (59 ft)			
MQDC1-5100	31 m (101.7 ft)			
MQDC1-506RA	2 m (6.5 ft)	Right-Angle	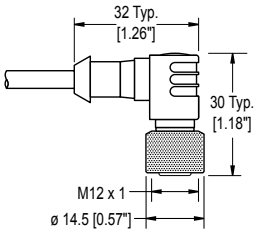	
MQDC1-515RA	5 m (16.4 ft)			
MQDC1-530RA	9 m (29.5 ft)			
MQDC1-560RA	19 m (62.3 ft)			

8-Pin Single-Ended M12 Female Open-Shielded Cordsets				
Model	**Length**	**Style**	**Dimensions**	**Pinout (Female)**
MQDC2S-806	2.04 m (6.7 ft)	Straight	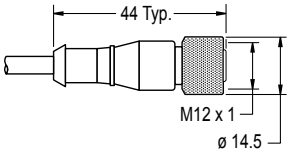	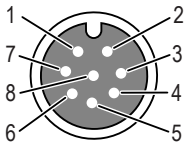 1 = White 2 = Brown 3 = Green 4 = Yellow 5 = Gray 6 = Pink 7 = Blue 8 = Red
MQDC2S-815	5.04 m (16.54 ft)			
MQDC2S-830	10.04 m (32.95 ft)			
MQDC2S-850	16 m (52.49 ft)			
MQDC2S-806RA	2 m (6.56 ft)	Right-Angle	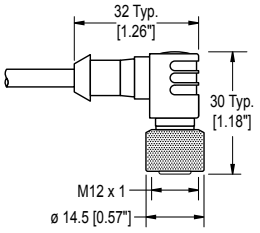	
MQDC2S-815RA	5 m (16.4 ft)			
MQDC2S-830RA	10 m (32.81 ft)			
MQDC2S-850RA	16 m (52.49 ft)			

© Banner Engineering Corp. All rights reserved.
www.bannerengineering.com

Elevated Mount System

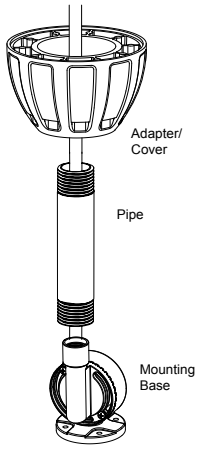

Adapter/Cover Model	Description	
SA-M30 - Black polycarbonate	• Streamlined black PC or Gray PC thread cover • Covers the outer M30 threads on the light's base • Typically used for the TL70 Tower Light and K90 series • Mounting hardware included • CAD files: DXF, PDF, IGS, STP	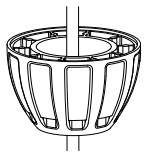
SA-M30C - Gray polycarbonate		

Black Anodized Aluminum, ½ in. NPT Pipe Models	Clear Anodized Aluminum, ½ in. NPT Pipe Models	Description
SOP-E12-150A, 150 mm (6 in) long	**SOP-E12-150AC**, 150 mm (6 in) long	• Elevated-use stand-off pipe • Threaded at both ends • Compatible with most industrial environments • CAD Files: ◦ **SOP-E12-150A**: DXF, PDF, IGS, STP ◦ **SOP-E12-300A**: DXF, PDF, IGS, STP ◦ **SOP-E12-600A**: DXF, PDF, IGS, STP ◦ **SOP-E12-900A**: DXF, PDF, IGS, STP
SOP-E12-300A, 300 mm (12 in) long	**SOP-E12-300AC**, 300 mm (12 in) long	
SOP-E12-600A, 600 mm (24 in) long	-	
SOP-E12-900A, 900 mm (36 in) long	**SOP-E12-900AC**, 900 mm (36 in) long	

Mounting Base Model	Description	
SA-FFB12 - Black polycarbonate	• For use with ½ in. stand-off pipes • 110° rotation • Stainless steel hardware • CAD files: DXF, PDF, IGS, STP	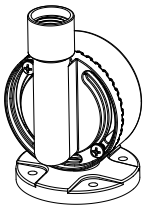
SA-FFB12C - Gray polycarbonate		

Other Pipes

304 Stainless Steel, ½ in. NPT Pipe Models	Description
SOP-E12-150SS, 150 mm (6 in) long	• Elevated-use stand-off pipe • Threaded at both ends • Compatible with most industrial environments • CAD Files: ◦ **SOP-E12-150x**: DXF, PDF, IGS, STP ◦ **SOP-E12-300x**: DXF, PDF, IGS, STP ◦ **SOP-E12-600x**: DXF, PDF, IGS, STP ◦ **SOP-E12-900x**: DXF, PDF, IGS, STP
SOP-E12-300SS, 300 mm (12 in) long	
SOP-E12-600SS, 600 mm (24 in) long	
SOP-E12-900SS, 900 mm (36 in) long	

Other Mounting Bases

Mounting Base Model	Description	
SA-E12M30 - Black acetal	• Streamlined black acetal or white UHMW mounting base adapter/cover • Adapter from ½ in. NPSM/DN15 pipe to 30 mm (1-3/16 in) drilled hole • Mounting hardware included • CAD files: DXF, PDF, IGS, STP	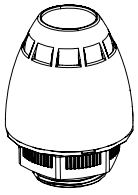
SA-E12M30C - White UHMW		

Mounting Base Model	Description	
SA-F12	• Die-cast zinc base with black paint • Elevated-use stand-off pipes (½ in, NPSM/DN15) • M5 mounting hardware and nitrile gasket included • CAD files: DXF, PDF, IGS, STP	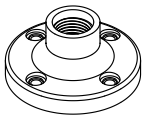

© Banner Engineering Corp. All rights reserved.
www.bannerengineering.com

LMB Sealed Right-Angle Bracket

Model	Description	
LMB30RA - Black polycarbonate CAD Files: DXF, PDF, IGS, STP **LMB30RAC** - Gray polycarbonate CAD Files: DXF, PDF, IGS, STP	• **Direct-Mount Models** • Bracket kit with base, 30 mm adapter, set screw, fasteners, O-rings, and gaskets.	
LMBE12RA - Black polycarbonate CAD Files: DXF, PDF, IGS, STP **LMBE12RAC** - Gray polycarbonate CAD Files: DXF, PDF, IGS, STP	• **Pipe-Mount Models** • Bracket kit with base, ½-14 pipe adapter, set screw, fasteners, O-rings, and gaskets • For use with stand-off pipe (listed and sold separately)	

Brackets

LMBE12RA35
- Direct mounting of stand-off pipe, with common bracket type
- Zinc-plated steel
- 1/2-14 NPSM nut
- Mounting distance from the wall to the center of the 1/2-14 NPSM nut is 35 mm
- CAD Files: DXF, PDF, IGS, STP

Hole center spacing: 20.0

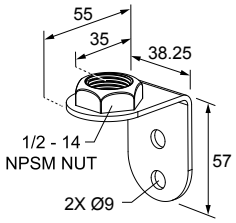

LMBE12RA45
- Direct mounting of stand-off pipe, with common bracket type
- Zinc-plated steel
- 1/2-14 NPSM nut
- Mounting distance from the wall to the center of the 1/2-14 NPSM nut is 45 mm
- CAD Files: DXF, PDF, IGS, STP

Hole center spacing: 35.0

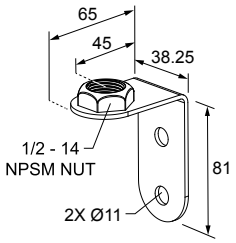

Sun Shield

K90DS
- Use for enhanced visibility in direct sunlight conditions
- Polycarbonate

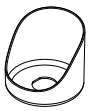

Banner Engineering Corp Limited Warranty

Banner Engineering Corp. warrants its products to be free from defects in material and workmanship for one year following the date of shipment. Banner Engineering Corp. will repair or replace, free of charge, any product of its manufacture which, at the time it is returned to the factory, is found to have been defective during the warranty period. This warranty does not cover damage or liability for misuse, abuse, or the improper application or installation of the Banner product.

THIS LIMITED WARRANTY IS EXCLUSIVE AND IN LIEU OF ALL OTHER WARRANTIES WHETHER EXPRESS OR IMPLIED (INCLUDING, WITHOUT LIMITATION, ANY WARRANTY OF MERCHANTABILITY OR FITNESS FOR A PARTICULAR PURPOSE), AND WHETHER ARISING UNDER COURSE OF PERFORMANCE, COURSE OF DEALING OR TRADE USAGE.

This Warranty is exclusive and limited to repair or, at the discretion of Banner Engineering Corp., replacement. **IN NO EVENT SHALL BANNER ENGINEERING CORP. BE LIABLE TO BUYER OR ANY OTHER PERSON OR ENTITY FOR ANY EXTRA COSTS, EXPENSES, LOSSES, LOSS OF PROFITS, OR ANY INCIDENTAL, CONSEQUENTIAL OR SPECIAL DAMAGES RESULTING FROM ANY PRODUCT DEFECT OR FROM THE USE OR INABILITY TO USE THE PRODUCT, WHETHER ARISING IN CONTRACT OR WARRANTY, STATUTE, TORT, STRICT LIABILITY, NEGLIGENCE, OR OTHERWISE.**

Banner Engineering Corp. reserves the right to change, modify or improve the design of the product without assuming any obligations or liabilities relating to any product previously manufactured by Banner Engineering Corp. Any misuse, abuse, or improper application or installation of this product or use of the product for personal protection applications when the product is identified as not intended for such purposes will void the product warranty. Any modifications to this product without prior express approval by Banner Engineering Corp will void the product warranties. All specifications published in this document are subject to change; Banner reserves the right to modify product specifications or update documentation at any time. Specifications and product information in English supersede that which is provided in any other language. For the most recent version of any documentation, refer to: www.bannerengineering.com.

For patent information, see www.bannerengineering.com/patents.

© Banner Engineering Corp. All rights reserved.
www.bannerengineering.com