# EZ-SCREEN LP Low-Profile Safety Light Curtain Instruction Manual

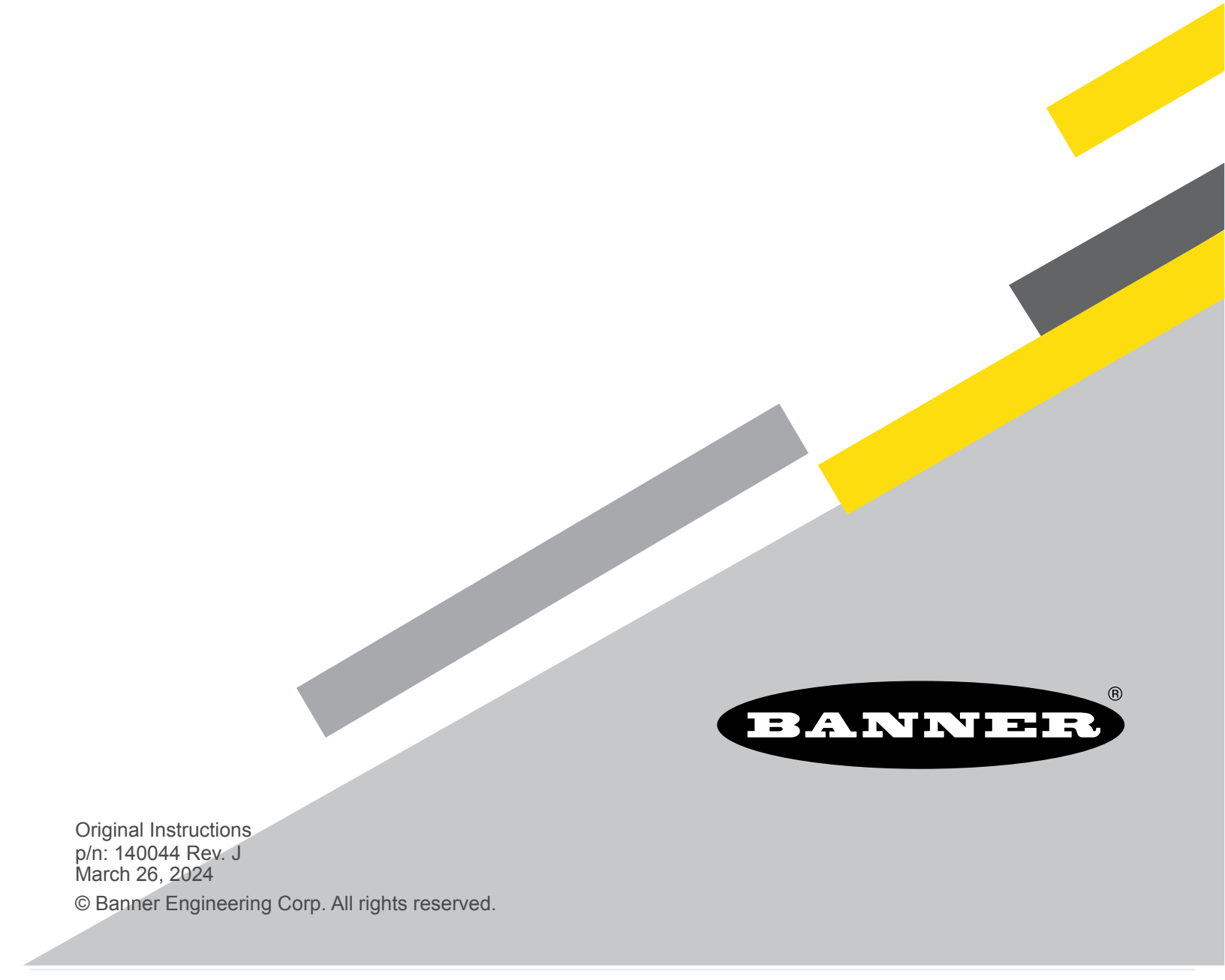

Original Instructions
p/n: 140044 Rev. J
March 26, 2024

© Banner Engineering Corp. All rights reserved.

ПРОМЭЛЕКТРОНИКА/ sales@prom-elec.com

# Contents


## Chapter 1 About This Document

1.1 Important... Read This Before Proceeding! ..... 5
1.2 Use of Warnings and Cautions ..... 5
1.3 EU/UK Declaration of Conformity (DoC) ..... 6

## Chapter 2 Standards and Regulations

2.1 Applicable US Standards ..... 7
2.2 OSHA Regulations ..... 8
2.3 International/European Standards ..... 8

## Chapter 3 Introduction

3.1 Appropriate Applications and Limitations ..... 9
3.1.1 Appropriate Applications ..... 9
3.1.2 Examples: Inappropriate Applications ..... 10
3.2 Features ..... 10
3.3 EZS LP System Description ..... 11
3.3.1 Components ..... 11
3.3.2 How to Order ..... 15
3.4 Operating Features ..... 15
3.4.1 Cascadeable Models ..... 16
3.5 Control Reliability: Redundancy and Self-Checking ..... 16
3.6 Specifications ..... 17
3.6.1 General Specifications ..... 17
3.6.2 Emitter Specifications ..... 17
3.6.3 Receiver Specifications ..... 18

## Chapter 4 Mechanical Installation

4.1 Mechanical Installation Considerations ..... 19
4.1.1 Calculating the Safety Distance (Minimum Distance) ..... 19
4.1.2 Reducing or Eliminating Pass-Through Hazards ..... 22
4.1.3 Supplemental Safeguarding ..... 23
4.2 Other Considerations ..... 24
4.2.1 Reset Switch Location ..... 24
4.2.2 Adjacent Reflective Surfaces ..... 25
4.2.3 Use of Corner Mirrors ..... 26
4.2.4 Emitter and Receiver Orientation ..... 27
4.2.5 Installation of Multiple Systems ..... 28
4.3 Mounting System Components ..... 29
4.3.1 Overview of Emitter/Receiver Mounting Hardware ..... 29
4.3.2 Sensor Mounting and Mechanical Alignment ..... 35
4.3.3 Mounting Dimensions and Defined Area ..... 36

## Chapter 5 Electrical Installation and Testing

5.1 Routing Cordsets ..... 39
5.2 Initial Electrical Connections ..... 40
5.3 Initial Checkout Procedure ..... 41
5.3.1 Configuring the System for Initial Checkout ..... 41
5.3.2 Initial Power-Up ..... 41
5.3.3 Optical Alignment ..... 42
5.3.4 Optical Alignment Procedure with Mirrors ..... 43
5.3.5 Reduced Resolution (Floating Blanking) ..... 44
5.3.6 Fixed Blanking ..... 45
5.3.7 Perform a Trip Test ..... 46
5.4 Electrical Connections to the Guarded Machine ..... 48
5.4.1 Output Signal Switching Device (OSSD) Output Connections ..... 48
5.4.2 Final Switching Devices (FSD) Interfacing Connections ..... 49
5.4.3 Machine Primary Control Elements and EDM Input ..... 50
5.4.4 External Device Monitoring ..... 50
5.4.5 External Device Monitoring Wiring ..... 51
5.4.6 Emitter Remote Test Input ..... 52
5.4.7 Auxiliary (OSSD Follow/Fault) Output ..... 52
5.4.8 Sensor Interchangeability ..... 53
5.5 Wiring Diagrams ..... 54
5.5.1 Reference Wiring Diagrams ..... 54
5.5.2 Emitter Wiring Options ..... 54

5.5.3 Generic Receiver Wiring—FSDs (Manual Reset) ... 55
5.5.4 Generic Receiver Wiring—Self-checking Safety Module, Safety Controller, Safety PLC ... 56
5.5.5 Generic Receiver Wiring—Interface Module ... 56
5.6 Preparing for System Operation ... 58
5.6.1 Commissioning Checkout ... 59

## Chapter 6 System Operation

6.1 Security Protocol ... 61
6.2 System Configuration Settings ... 61
6.2.1 Selectable Trip/Latch Outputs ... 63
6.2.2 Manual Resets and Lockout Conditions ... 63
6.3 Reset Procedures ... 64
6.3.1 Emitter and Receiver Resets ... 64
6.4 Status Indicators ... 65
6.4.1 Emitter Status Indicator Codes ... 66
6.4.2 Receiver Status Indicator Codes ... 66
6.5 Normal Operation ... 69
6.5.1 System Power-Up ... 69
6.5.2 Run Mode ... 69
6.6 Periodic Checkout Requirements ... 70

## Chapter 7 Troubleshooting

7.1 Lockout Conditions ... 71
7.2 Recovery Procedures ... 71
6.3.1 Emitter and Receiver Resets ... 64
7.2.2 Emitter Error Codes ... 73
7.2.3 Receiver Error Codes ... 73
7.2.4 Test Mode ... 76
7.3 Electrical and Optical Noise ... 77
7.3.1 Check for Optical Noise Sources ... 77

## Chapter 8 Checkout Procedures

8.1 Schedule of Checkouts ... 78

## Chapter 9 Accessories

9.1 Cordsets ... 79
9.1.1 Connection Options ... 79
9.1.2 RD to Flying Leads Cordsets ... 79
9.1.3 RD to Flying Leads Cordsets (E-Stop/Interlock Connections) ... 80
9.1.4 RD to RD Cordsets ... 80
9.1.5 RD to M12 QD Cordset ... 80
9.1.6 RD to Female M12 QD and Mating Cordsets ... 80
9.1.7 M12 to Flying Leads Cordsets ... 81
9.1.8 Splitter Cordsets ... 81
9.1.9 Male M12 to Female M12 QD Cordsets ... 82
9.1.10 DEE8-xxD Adapter M12 QD Cordsets ... 83
9.1.11 Bulkhead Connector ... 83
9.2 Interface Modules ... 83
9.3 Contactors ... 83
9.4 AC Boxes ... 84
9.5 Muting Module ... 84
9.6 Safety Controllers ... 84
9.7 Remote Blanking Key Switch Box ... 85
9.8 External Keyed Reset Switches ... 85
9.9 Snap-On Lens Shields ... 85
9.10 EZ-LIGHT for EZ-SCREEN ... 85
9.11 MSA Series Stands ... 86
9.12 SSM Series Corner Mirrors ... 86
9.13 Accessory Mounting Brackets ... 87
9.14 Alignment Aids ... 89

## Chapter 10 Cascade

10.1 Overview of Cascading ... 90
10.1.1 System Components and Specifications ... 91
10.1.2 Receiver Display ... 91
10.2 Cascadeable Emitter and Receiver Models—14 mm Resolution ... 91
10.3 Cascadeable Emitter and Receiver Models—25 mm Resolution ... 92
10.4 Determining Interconnect Cordset Lengths ... 94

10.5 Cordset examples for two cascaded light screens ..... 95
10.6 Cordset examples for three cascaded light screens ..... 95
10.7 Cordset examples for four cascaded light screens ..... 96
10.8 Response Time for Cascaded Light Screens ..... 96
10.8.1 Individual Response Time and Safety (Minimum) Distance ..... 96
10.8.2 Overall Response Time and Safety (Minimum) Distance ..... 98
10.8.3 Cascade Configuration vs. Response Time ..... 99
10.8.4 Simplified Method for Determining Response Time ..... 99
10.9 Cascaded Sensor Configuration Settings ..... 100
10.9.1 Fixed Blanking ..... 100
10.10 Configuration for Cascaded Operation ..... 100
10.11 Emergency Stop Buttons in Cascaded Systems ..... 101
10.11.1 Emergency-Stop Switch Requirements (Positive-Opening) ..... 102
10.12 Interlock Switches in Cascaded Systems ..... 103
10.12.1 Interlock Guarding Requirements ..... 103
10.12.2 Positive-Opening Interlocking Safety Switches ..... 104
10.12.3 Monitoring Series-Connected Positive-Opening Safety Switches ..... 105
10.13 Remote Fixed Blanking ..... 106
10.13.1 Programming Key Switch Location ..... 107
10.13.2 Remote Fixed Blanking Programming Procedures ..... 107

## Chapter 11 Product Support and Maintenance

11.1 EZS LP Literature ..... 110
11.2 Cleaning ..... 110
11.3 EZS LP Replacement Parts ..... 110
11.4 Warranty Service ..... 111
11.5 Manufacturing Date ..... 111
11.6 Disposal ..... 111
11.7 Banner Engineering Corp Limited Warranty ..... 111
1.3 EU/UK Declaration of Conformity (DoC) ..... 6
11.9 Contact Us ..... 112
11.10 Document Information ..... 112

## Chapter 12 Glossary of Safety Terminology ..... 113

## Index ..... 117

Chapter Contents

1.1 Important... Read This Before Proceeding! ..... 5
1.2 Use of Warnings and Cautions ..... 5
1.3 EU/UK Declaration of Conformity (DoC) ..... 6

# Chapter 1 About This Document

## 1.1 Important... Read This Before Proceeding!

It is the responsibility of the machine designer, controls engineer, machine builder, machine operator, and/or maintenance personnel or electrician to apply and maintain this device in full compliance with all applicable regulations and standards. The device can provide the required safeguarding function only if it is properly installed, properly operated, and properly maintained. This manual attempts to provide complete installation, operation, and maintenance instructions. *Reading the manual in its entirety is highly recommended to ensure proper understanding of the operation, installation, and maintenance.* Please direct any questions regarding the application or use of the device to Banner Engineering Corp..

For more information regarding U.S. and international institutions that provide safeguarding application and safeguarding device performance standards, see "Standards and Regulations" on page 7.

**WARNING:**

- The user is responsible for following these instructions.
- **Failure to follow any of these responsibilities may potentially create a dangerous condition that could result in serious injury or death.**
- Carefully read, understand, and comply with all instructions for this device.
- Perform a risk assessment that includes the specific machine guarding application. Guidance on a compliant methodology can be found in ISO 12100 or ANSI B11.0.
- Determine what safeguarding devices and methods are appropriate per the results of the risk assessment and implement per all applicable local, state, and national codes and regulations. See ISO 13849-1, ANSI B11.19, and/or other appropriate standards.
- Verify that the entire safeguarding system (including input devices, control systems, and output devices) is properly configured and installed, operational, and working as intended for the application.
- Periodically re-verify, as needed, that the entire safeguarding system is working as intended for the application.

## 1.2 Use of Warnings and Cautions

The precautions and statements used throughout this document are indicated by alert symbols and must be followed for the safe use of the EZ-SCREEN LP Low-Profile Safety Light Curtain. Failure to follow all precautions and alerts may result in unsafe use or operation. The following signal words and alert symbols are defined as follows:

| Signal Word and Symbol | Definition |
|---|---|
| **WARNING**: | **Warnings** refer to potentially hazardous situations which, if not avoided, could result in serious injury or death. |
| **CAUTION**: | **Cautions** refer to potentially hazardous situations which, if not avoided, could result in minor or moderate injury. |


© Banner Engineering Corp. All rights reserved.

These statements are intended to inform the machine designer and manufacturer, the end user, and maintenance personnel, how to avoid misapplication and effectively apply the EZ-SCREEN LP Low-Profile Safety Light Curtain to meet the various safeguarding application requirements. These individuals are responsible to read and abide by these statements.

## 1.3 EU/UK Declaration of Conformity (DoC)

Banner Engineering Corp. herewith declares that these products are in conformity with the provisions of the listed directives and all essential health and safety requirements have been met. For the complete DoC, please go to www.bannerengineering.com.

| Product | Directive |
|---|---|
| EZ-SCREEN LP Low-Profile Safety Light Curtain | EU: Machinery Directive 2006/42/EC |
| | UKCA: Machinery (Safety) Regulation 2008 |

Representative in EU: Spiros Lachandidis, Managing Director, **Banner Engineering BV** Park Lane | Culliganlaan 2F bus 3 | 1831 Diegem, BELGIUM

Representative in UK: Tony Coghlan, Managing Director, **Turck Banner LTD** Blenheim House | Blenheim Court | Wickford, Essex SS11 8YT | Great Britain


© Banner Engineering Corp. All rights reserved.

Chapter Contents

2.1 Applicable US Standards ..... 7
2.2 OSHA Regulations ..... 8
2.3 International/European Standards ..... 8

# Chapter 2 Standards and Regulations

*The list of standards below is included as a convenience for users of this Banner device. Inclusion of the standards below does not imply that the device complies specifically with any standard, other than those specified in the Specifications section of this manual.*

## 2.1 Applicable US Standards

ANSI B11.0 Safety of Machinery

ANSI B11.1 Mechanical Power Presses

ANSI B11.2 Hydraulic Power Presses

ANSI B11.3 Power Press Brakes

ANSI B11.4 Shears

ANSI B11.5 Iron Workers

ANSI B11.6 Lathes

ANSI B11.7 Cold Headers and Cold Formers

ANSI B11.8 Drilling, Milling, and Boring

ANSI B11.9 Grinding Machines

ANSI B11.10 Metal Sawing Machines

ANSI B11.11 Gear Cutting Machines

ANSI B11.12 Roll Forming and Roll Bending Machines

ANSI B11.13 Single- and Multiple-Spindle Automatic Bar and Chucking Machines

ANSI B11.14 Coil Slitting Machines

ANSI B11.15 Pipe, Tube, and Shape Bending Machines

ANSI B11.16 Metal Powder Compacting Presses

ANSI B11.17 Horizontal Extrusion Presses

ANSI B11.18 Machinery and Machine Systems for the Processing of Coiled Strip, Sheet, and Plate

ANSI B11.19 Performance Requirements for Risk Reduction Measures: Safeguarding and Other Means of Reducing Risk

ANSI B11.20 Manufacturing Systems

ANSI B11.21 Machine Tools Using Lasers

ANSI B11.22 Numerically Controlled Turning Machines

ANSI B11.23 Machining Centers

ANSI B11.24 Transfer Machines

ANSI/RIA R15.06 Safety Requirements for Industrial Robots and Robot Systems


© Banner Engineering Corp. All rights reserved.

NFPA 79 Electrical Standard for Industrial Machinery

ANSI/PMMI B155.1 Package Machinery and Packaging-Related Converting Machinery — Safety Requirements

## 2.2 OSHA Regulations

OSHA Documents listed are part of: Code of Federal Regulations Title 29, Parts 1900 to 1910

OSHA 29 CFR 1910.212 General Requirements for (Guarding of) All Machines

OSHA 29 CFR 1910.147 The Control of Hazardous Energy (lockout/tagout)

OSHA 29 CFR 1910.217 (Guarding of) Mechanical Power Presses

## 2.3 International/European Standards

ISO 12100 Safety of Machinery – General Principles for Design – Risk Assessment and Risk Reduction

ISO 13857 Safety of Machinery – Safety Distances to Prevent Hazard Zones Being Reached

ISO 13850 (EN 418) Emergency Stop Devices, Functional Aspects – Principles for Design

ISO 13851 Two-Hand Control Devices – Principles for Design and Selection

IEC 62061 Safety of Machinery – Functional Safety of Safety-Related Control Systems

ISO 13849-1 Safety of Machinery – Safety-Related Parts of Control Systems – Part 1: General Principles for Design

EN 13855 (EN 999) The Positioning of Protective Equipment in Respect to Approach Speeds of Parts of the Human Body

ISO 14119 (EN 1088) Interlocking Devices Associated with Guards – Principles for Design and Selection

EN 60204-1 Electrical Equipment of Machines Part 1: General Requirements

IEC 61496 Electro-sensitive Protection Equipment

IEC 60529 Degrees of Protection Provided by Enclosures

IEC 60947-1 Low Voltage Switchgear – General Rules

IEC 60947-5-1 Low Voltage Switchgear – Electromechanical Control Circuit Devices

IEC 60947-5-5 Low Voltage Switchgear – Electrical Emergency Stop Device with Mechanical Latching Function

IEC 61508 Functional Safety of Electrical/Electronic/Programmable Electronic Safety-Related Systems

IEC 62046 Safety of Machinery – Applications of Protective Equipment to Detect the Presence of Persons

ISO 3691-4 Industrial Trucks – Safety Requirements and Verification, Part 4 Driverless Industrial trucks and their Systems


© Banner Engineering Corp. All rights reserved.

Chapter Contents

3.1 Appropriate Applications and Limitations ..... 9
3.2 Features ..... 10
3.3 EZS LP System Description ..... 11
3.4 Operating Features ..... 15
3.5 Control Reliability: Redundancy and Self-Checking ..... 16
3.6 Specifications ..... 17

# Chapter 3 Introduction

## 3.1 Appropriate Applications and Limitations

**WARNING:**

- **Read this Section Carefully Before Installing the System**
- **Failure to follow these instructions could result in serious injury or death.**
- If all mounting, installation, interfacing, and checkout procedures are not followed properly, this Banner Engineering Corp. device cannot provide the protection for which it was designed.
- The user is responsible for ensuring that all local, state, and national laws, rules, codes, or regulations relating to the installation and use of this control system in any particular application are satisfied. Ensure that all legal requirements have been met and that all technical installation and maintenance instructions contained in this manual are followed.
- The user has the sole responsibility to ensure that this Banner Engineering Corp. device is installed and interfaced to the guarded machine by Qualified Persons, in accordance with this manual and applicable safety regulations. A Qualified person is a person who, by possession of a recognized degree or certificate of professional training, or who, by extensive knowledge, training and experience, has successfully demonstrated the ability to solve problems relating to the subject matter and work.

The Banner EZ-SCREEN LP is intended for point-of-operation machine guarding and other safeguarding applications. It is the user's responsibility to verify whether the safeguarding is appropriate for the application and is installed, as instructed by this manual, by a Qualified Person.

The ability of the EZ-SCREEN LP to perform its safeguarding function depends upon the appropriateness of the application and upon its proper mechanical and electrical installation and interfacing to the guarded machine. **If all mounting, installation, interfacing, and checkout procedures are not followed properly, the EZ-SCREEN LP cannot provide the protection for which it was designed**.

**WARNING:**

- **Install System Only on Appropriate Applications**
- Failure to follow these instructions could result in serious injury or death.
- Use Banner's EZ-SCREEN LP only on machinery that can be stopped immediately after a stop signal is issued at any point in the machine's stroke or cycle, such as part-revolution clutched machines. Under no circumstances may the EZ-SCREEN LP be used on full-revolution clutched machinery or in unsuitable applications.
- If there is any doubt about whether or not your machinery is compatible with the EZ-SCREEN LP, contact Banner Engineering.

### 3.1.1 Appropriate Applications

EZ-SCREEN LP is typically used for, but is not limited to, the following applications:

- Small assembly equipment
- Automated production equipment
- Robotic work cells
- Molding and power presses


© Banner Engineering Corp. All rights reserved.

- Assembly and packaging machines
- Lean manufacturing systems

*Figure 1. EZ-SCREEN LP: Typical Application*

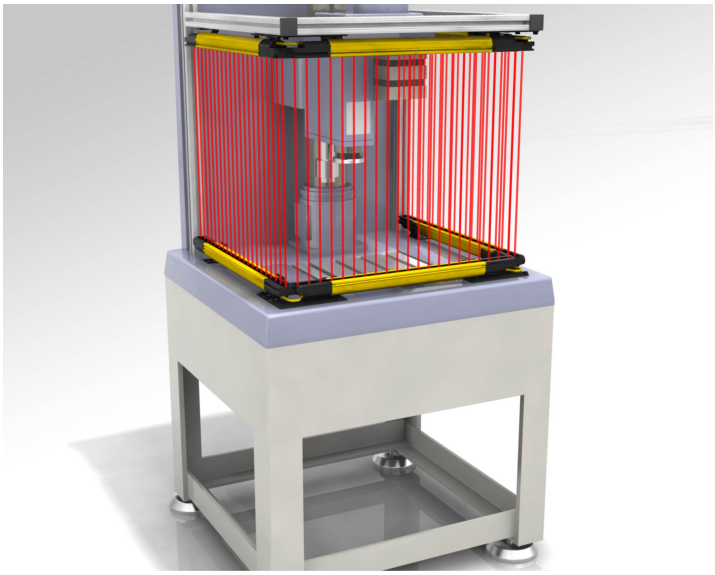

### 3.1.2 Examples: Inappropriate Applications

Do not use EZ-SCREEN LP in the following applications:

- With any machine that cannot be stopped immediately after a stop signal is issued, such as single-stroke (or full-revolution) clutched machinery
- With any machine with inadequate or inconsistent machine response time and stopping performance
- With any machine that ejects materials or component parts through the defined area
- In any environment that is likely to adversely affect photoelectric sensing efficiency. For example, corrosive chemicals or fluids or unusually severe levels of smoke or dust, if not controlled, may degrade sensing efficiency
- As a tripping device to initiate or reinitiate machine motion (PSDI applications), unless the machine and its control system fully comply with the relevant standard or regulation (see OSHA 29CFR1910.217, NFPA 79, ANSI B11.19, ISO 12100, IEC 60204-1, IEC 61496-1, or other appropriate standard)

If an EZ-SCREEN LP is installed for use as a perimeter guard (where a pass-through hazard may exist, see "Reducing or Eliminating Pass-Through Hazards" on page 22), the dangerous machine motion can be initiated by normal means only after the safeguarded area is clear of individuals and the EZ-SCREEN LP has been manually reset.

## 3.2 Features

- A two-piece optoelectronic safeguarding device
- Creates a screen of synchronized, modulated infrared sensing beams that extend from end-to-end of the housing (no "dead" zone)
- Low-profile compact package for smaller production machines, robust for large power presses
- Standard or cascadeable models available
- 14 mm or 25 mm resolution; defined areas from 270 to 1250 mm (10.6 in to 49.2 in)
- 100 mm to 7 m (4 in to 23 ft) sensing range
- Reduced resolution and fixed blanking is easily configured.  Remote Teach of fixed blanking option on cascade models.
- Zone and Status indicators plus digital display to indicate number of beams blocked, detailed diagnostics
- FMEA tested to ensure control reliability
- Highly immune to EMI, RFI, ambient light, weld flash, and strobe light
- Selectable 1-ch, 2-ch, or no external device monitoring
- Vibration-tolerant, factory burned-in emitter and receiver circuitry for toughness and dependability
- Selectable auxiliary output option to monitor the state of the OSSDs or monitor receiver lockouts

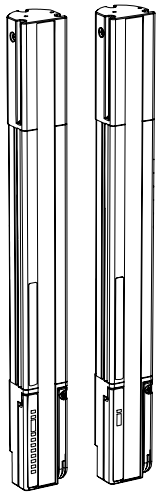


© Banner Engineering Corp. All rights reserved.

- Selectable emitter test option simulates a "blocked" condition
- Up to four pairs of SLPC.. model emitters and receivers can be cascaded
- Safety PLC input compatible (per OSSD specifications)

# 3.3 EZS LP System Description

> **NOTE:** This manual refers to an emitter and its receiver, and their cabling, or a cascade of emitters and their receivers and their cabling as "a System".

Banner EZ-SCREEN LP emitters and receivers provide a redundant, microprocessor-controlled, opposed-mode optoelectronic "curtain of light", or "safety light screen". EZ-SCREEN LP typically is used for point-of-operation safeguarding, and is suited to safeguard a variety of machinery.

The EZ-SCREEN LP is a two-piece (two-box) system comprising an emitter and a receiver, but no external controller. The external device monitoring (EDM) function ensures the fault detection capability required by EN ISO 13849-1 Categories 3 and 4 without a third box, a controller or a "smart" (self-checking) safety module required of systems without EDM.

The EZ-SCREEN LP emitters have a row of synchronized modulated infrared (invisible) light-emitting diodes (LEDs) in a compact metal housing. Receivers have a corresponding row of synchronized photodetectors. The light screen created by the emitter and receiver is called the defined area; its width and height are determined by the length of the sensor pair and the distance between them. The low-profile housing provides maximum sensing within minimum space; its defined area (sensing area) is equivalent to the height of the housing. The maximum sensing range is 7 m (23 ft), which decreases if corner mirrors are used. The sensing area extends from end to end of the housing; there is no “dead zone.” Specialty brackets allow easy mounting of cascaded sensors, without any loss of resolution between sensor pairs.

In typical operation, if any part of an operator’s body (or any opaque object) of more than a pre-determined cross section is detected, the solid-state Output Signal Switching Device (OSSD) safety outputs turn OFF. These safety outputs are connected to the guarded machine’s Final Switching Devices (FSDs) that control the machine primary control elements (MPCEs), which immediately stop the motion of the guarded machine.

Electrical connections (power, ground, inputs, and outputs) are made via unique RD (removable disconnect) cordsets.

Functions such as Trip/Latch select, Display Invert, Cascading, Fixed Blanking (including Remote Teach), Reduced Resolution, Scan Code Select, and External Device Monitoring are described in "Operating Features" on page 15. An auxiliary (aux.) output may be used to signal the state of the OSSDs to a process controller. All models require a supply voltage of +24V dc ±15%.

Both the emitter and the receiver feature 7-segment diagnostic displays and individual LEDs to provide continuous indication of operating status, configuration, and error conditions.

EZ-SCREEN LP is extensively FMEA (Failure Mode and Effects Analysis) tested to establish an extremely high degree of confidence that, when appropriately installed, no system component will (even if it should fail) cause a failure to danger.

## 3.3.1 Components

An EZ-SCREEN LP “System” refers to a compatible emitter and receiver (equal length and resolution; available separately or in pairs), and cordset(s) for each. It also refers to the emitters and receivers in a cascade, and their cabling. Mounting hardware is included with each emitter and receiver; special-purpose accessory brackets are also available, both for standalone pairs and for cascades. Interfacing solutions include IM-T-.. modules, redundant positively guided contactors, and muting modules; see "Accessories" on page 79. See "Cascadeable Emitter and Receiver Models—14 mm Resolution" on page 91 and "Cascadeable Emitter and Receiver Models—25 mm Resolution" on page 92 for cascadeable models.


© Banner Engineering Corp. All rights reserved.

*Figure 2. Banner EZ-SCREEN LP system: emitter, receiver, and two interconnecting cables*

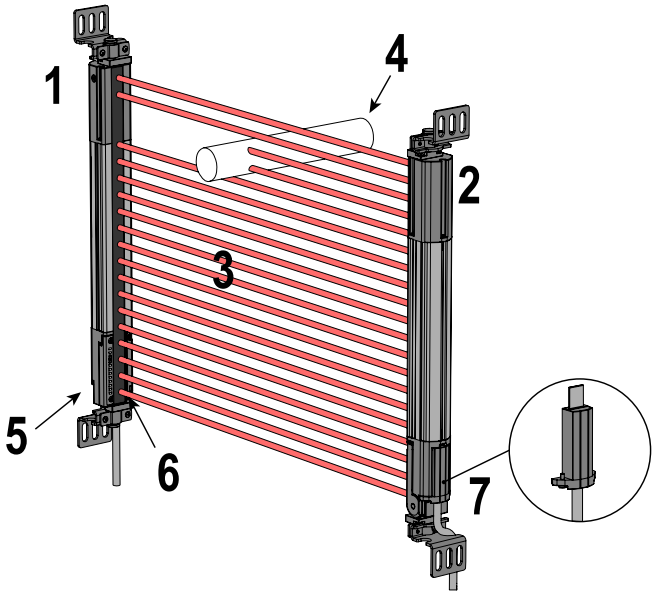


1. Receiver
2. Emitter
3. Defined area
4. Specified test piece
5. Status indicators are clearly visible on the sensor face
6. Configuration switches are behind the hinged access door
7. RD cordset

Models are sold either with a 300 mm (1 ft) pigtail with 8-pin M12 QD termination or with the integral RD connection (no cordset included). The 13 mm (0.5 in) minimum bend radius for all cordset models accommodates low-clearance installations; cords can exit to left, right, or back of sensor, when mounting. The pigtail QD option is useful for connection to splitter cables or other QD cordsets.

*Table 1. EZ-SCREEN LP removable-disconnect (RD) cordsets*

| | | | |
|---|---|---|---|
|  | 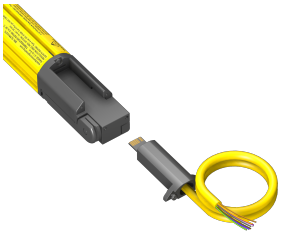 | 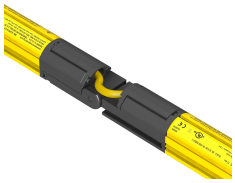 |  |
| M12 QD termination (pigtail); requires mating QD cordset for machine connection | RD cordset with flying leads | RD-to-RD cordset options are available for compact sensor-to-sensor connections | Cable pivots 180° as it exits the housing; bends to fit against perpendicular surfaces |

Standard models ("Standard Emitter and Receiver Models (Non-Cascadeable)—14 mm Resolution" on page 13 and "Standard Emitter and Receiver Models (Non-Cascadeable)—25 mm Resolution" on page 14) feature a yellow-painted aluminum housing. Clear anodized (silver-colored) housing finish is also available; contact Banner Engineering for more information. Both housing colors have black endcaps.

Electro-static dissipative (ESD-safe) models with nickel-plated housing and endcaps are also available. Their static-dissipative polymer coating protects nearby components from damaging ESD voltages. Contact Banner Engineering for more information.


© Banner Engineering Corp. All rights reserved.

## Standard Emitter and Receiver Models (Non-Cascadeable)—14 mm Resolution

For cascadeable emitter and receiver models, see "Cascadeable Emitter and Receiver Models—14 mm Resolution" on page 91 and "Cascadeable Emitter and Receiver Models—25 mm Resolution" on page 92. Only standard yellow housing models are listed. Cabled QD models (for example, **SLPE14-270P8**) have yellow PVC cable and black PVC QD overmold. For other models, see below.

See www.bannerengineering.com or call Banner Engineering for kit model numbering scheme.

Order one machine interface cordset for each emitter or receiver; see "Cordsets" on page 79.

| Defined Area | Models | | | Connection | Response Time | # Beams |
|---|---|---|---|---|---|---|
| | Emitter | Receiver | Pair[1] | | | |
| 270 mm | **SLPE14-270P8** | **SLPR14-270P8** | **SLPP14-270P88** | 300 mm (1 ft) PVC-jacketed cable with an 8-pin M12 male quick-disconnect connector | 10.5 ms | 27 |
| | **SLPE14-270** | **SLPR14-270** | **SLPP14-270** | Integral Removable Disconnect (RD) | | |
| 410 mm | **SLPE14-410P8** | **SLPR14-410P8** | **SLPP14-410P88** | 300 mm (1 ft) PVC-jacketed cable with an 8-pin M12 male quick-disconnect connector | 13.5 ms | 41 |
| | **SLPE14-410** | **SLPR14-410** | **SLPP14-410** | Integral Removable Disconnect (RD) | | |
| 550 mm | **SLPE14-550P8** | **SLPR14-550P8** | **SLPP14-550P88** | 300 mm (1 ft) PVC-jacketed cable with an 8-pin M12 male quick-disconnect connector | 16.5 ms | 55 |
| | **SLPE14-550** | **SLPR14-550** | **SLPP14-550** | Integral Removable Disconnect (RD) | | |
| 690 mm | **SLPE14-690P8** | **SLPR14-690P8** | **SLPP14-690P88** | 300 mm (1 ft) PVC-jacketed cable with an 8-pin M12 male quick-disconnect connector | 19.5 ms | 69 |
| | **SLPE14-690** | **SLPR14-690** | **SLPP14-690** | Integral Removable Disconnect (RD) | | |
| 830 mm | **SLPE14-830P8** | **SLPR14-830P8** | **SLPP14-830P88** | 300 mm (1 ft) PVC-jacketed cable with an 8-pin M12 male quick-disconnect connector | 22.5 ms | 83 |
| | **SLPE14-830** | **SLPR14-830** | **SLPP14-830** | Integral Removable Disconnect (RD) | | |
| 970 mm | **SLPE14-970P8** | **SLPR14-970P8** | **SLPP14-970P88** | 300 mm (1 ft) PVC-jacketed cable with an 8-pin M12 male quick-disconnect connector | 25.5 ms | 97 |
| | **SLPE14-970** | **SLPR14-970** | **SLPP14-970** | Integral Removable Disconnect (RD) | | |
| 1110 mm | **SLPE14-1110P8** | **SLPR14-1110P8** | **SLPP14-1110P88** | 300 mm (1 ft) PVC-jacketed cable with an 8-pin M12 male quick-disconnect connector | 28.5 ms | 111 |
| | **SLPE14-1110** | **SLPR14-1110** | **SLPP14-1110** | Integral Removable Disconnect (RD) | | |
| 1250 mm | **SLPE14-1250P8** | **SLPR14-1250P8** | **SLPP14-1250P88** | 300 mm (1 ft) PVC-jacketed cable with an 8-pin M12 male quick-disconnect connector | 31.5 ms | 125 |
| | **SLPE14-1250** | **SLPR14-1250** | **SLPP14-1250** | Integral Removable Disconnect (RD) | | |
| 1390 mm * | **SLPE14-1390P8** | **SLPR14-1390P8** | **SLPP14-1390P88** | 300 mm (1 ft) PVC-jacketed cable with an 8-pin M12 male quick-disconnect connector | 34.5 ms | 139 |
| | **SLPE14-1390** | **SLPR14-1390** | **SLPP14-1390** | Integral Removable Disconnect (RD) | | |
| 1530 mm * | **SLPE14-1530P8** | **SLPR14-1530P8** | **SLPP14-1530P88** | 300 mm (1 ft) PVC-jacketed cable with an 8-pin M12 male quick-disconnect connector | 37.5 ms | 153 |
| | **SLPE14-1530** | **SLPR14-1530** | **SLPP14-1530** | Integral Removable Disconnect (RD) | | |
| 1670 mm * | **SLPE14-1670P8** | **SLPR14-1670P8** | **SLPP14-1670P88** | 300 mm (1 ft) PVC-jacketed cable with an 8-pin M12 male quick-disconnect connector | 40.5 ms | 167 |
| | **SLPE14-1670** | **SLPR14-1670** | **SLPP14-1670** | Integral Removable Disconnect (RD) | | |
| 1810 mm * | **SLPE14-1810P8** | **SLPR14-1810P8** | **SLPP14-1810P88** | 300 mm (1 ft) PVC-jacketed cable with an 8-pin M12 male quick-disconnect connector | 43.5 ms | 181 |
| | **SLPE14-1810** | **SLPR14-1810** | **SLPP14-1810** | Integral Removable Disconnect (RD) | | |

[1] A pair includes an emitter and a receiver


© Banner Engineering Corp. All rights reserved.

* Lengths longer than 1250 mm are no longer available.

For other models:

- **Anodized aluminum housing:** Prior to the connection designation (if any) in the model number, add “A” for a clear (brushed) anodized aluminum finish and black endcaps (for example, **SLPE14-270A**). Pigtail QD models (for example, **SLPE14-270AP8**) have black PVC cable and QD overmold.
- ESD-safe models: Prior to the connection designation (if any) in the model number, add “N” for a nickel-plated housing and endcaps (for example, **SLPE14-270N**). Pigtail QD models (for example, **SLPE14-270NP8**) have black PVC cable and QD overmold.
- Cabled QD models require mating cordsets with an 8-pin M12 connector (such as **QDE-8..D**, **DEE2R-8..D**, or **CSB-M128..M1281**; see "Cordsets" on page 79).
- Integral RD models require mating cordsets with a removable disconnect connector (such as **RDLP-8..D**, **DELPE-8..D**, or **DELPE-11..D**; see "Cordsets" on page 79).

## Standard Emitter and Receiver Models (Non-Cascadeable)—25 mm Resolution

For cascadeable emitter and receiver models, see "Cascadeable Emitter and Receiver Models—14 mm Resolution" on page 91 and "Cascadeable Emitter and Receiver Models—25 mm Resolution" on page 92. Only standard yellow housing models are listed. Cabled QD models (for example, **SLPE25-270P8**) have yellow PVC cable and black PVC QD overmold. For other models, see below.

See www.bannerengineering.com or call Banner Engineering for kit model numbering scheme.

Order one machine interface cordset for each emitter or receiver; see "Cordsets" on page 79.

| Defined Area | Models | | | Connection | Response Time | # Beams |
|---|---|---|---|---|---|---|
| | Emitter | Receiver | Pair[1] | | | |
| 270 mm | **SLPE25-270P8** | **SLPR25-270P8** | **SLPP25-270P88** | 300 mm (1 ft) PVC-jacketed cable with an 8-pin M12 male quick-disconnect connector | 8 ms | 14 |
| | **SLPE25-270** | **SLPR25-270** | **SLPP25-270** | Integral Removable Disconnect (RD) | | |
| 410 mm | **SLPE25-410P8** | **SLPR25-410P8** | **SLPP25-410P88** | 300 mm (1 ft) PVC-jacketed cable with an 8-pin M12 male quick-disconnect connector | 9.5 ms | 21 |
| | **SLPE25-410** | **SLPR25-410** | **SLPP25-410** | Integral Removable Disconnect (RD) | | |
| 550 mm | **SLPE25-550P8** | **SLPR25-550P8** | **SLPP25-550P88** | 300 mm (1 ft) PVC-jacketed cable with an 8-pin M12 male quick-disconnect connector | 11 ms | 28 |
| | **SLPE25-550** | **SLPR25-550** | **SLPP25-550** | Integral Removable Disconnect (RD) | | |
| 690 mm | **SLPE25-690P8** | **SLPR25-690P8** | **SLPP25-690P88** | 300 mm (1 ft) PVC-jacketed cable with an 8-pin M12 male quick-disconnect connector | 12.5 ms | 35 |
| | **SLPE25-690** | **SLPR25-690** | **SLPP25-690** | Integral Removable Disconnect (RD) | | |
| 830 mm | **SLPE25-830P8** | **SLPR25-830P8** | **SLPP25-830P88** | 300 mm (1 ft) PVC-jacketed cable with an 8-pin M12 male quick-disconnect connector | 14 ms | 42 |
| | **SLPE25-830** | **SLPR25-830** | **SLPP25-830** | Integral Removable Disconnect (RD) | | |
| 970 mm | **SLPE25-970P8** | **SLPR25-970P8** | **SLPP25-970P88** | 300 mm (1 ft) PVC-jacketed cable with an 8-pin M12 male quick-disconnect connector | 15.5 ms | 49 |
| | **SLPE25-970** | **SLPR25-970** | **SLPP25-970** | Integral Removable Disconnect (RD) | | |
| 1110 mm | **SLPE25-1110P8** | **SLPR25-1110P8** | **SLPP25-1110P88** | 300 mm (1 ft) PVC-jacketed cable with an 8-pin M12 male quick-disconnect connector | 17 ms | 56 |
| | **SLPE25-1110** | **SLPR25-1110** | **SLPP25-1110** | Integral Removable Disconnect (RD) | | |
| 1250 mm | **SLPE25-1250P8** | **SLPR25-1250P8** | **SLPP25-1250P88** | 300 mm (1 ft) PVC-jacketed cable with an 8-pin M12 male quick-disconnect connector | 18.5 ms | 63 |
| | **SLPE25-1250** | **SLPR25-1250** | **SLPP25-1250** | Integral Removable Disconnect (RD) | | |

Continued on page 15

[1] A pair includes an emitter and a receiver


© Banner Engineering Corp. All rights reserved.

Continued from page 14

| Defined Area | Models | | | Connection | Response Time | # Beams |
|---|---|---|---|---|---|---|
| | Emitter | Receiver | Pair | | | |
| 1390 mm * | **SLPE25-1390P8** | **SLPR25-1390P8** | **SLPP25-1390P88** | 300 mm (1 ft) PVC-jacketed cable with an 8-pin M12 male quick-disconnect connector | 20 ms | 70 |
| | **SLPE25-1390** | **SLPR25-1390** | **SLPP25-1390** | Integral Removable Disconnect (RD) | | |
| 1530 mm * | **SLPE25-1530P8** | **SLPR25-1530P8** | **SLPP25-1530P88** | 300 mm (1 ft) PVC-jacketed cable with an 8-pin M12 male quick-disconnect connector | 21 ms | 77 |
| | **SLPE25-1530** | **SLPR25-1530** | **SLPP25-1530** | Integral Removable Disconnect (RD) | | |
| 1670 mm * | **SLPE25-1670P8** | **SLPR25-1670P8** | **SLPP25-1670P88** | 300 mm (1 ft) PVC-jacketed cable with an 8-pin M12 male quick-disconnect connector | 22.5 ms | 84 |
| | **SLPE25-1670** | **SLPR25-1670** | **SLPP25-1670** | Integral Removable Disconnect (RD) | | |
| 1810 mm * | **SLPE25-1810P8** | **SLPR25-1810P8** | **SLPP25-1810P88** | 300 mm (1 ft) PVC-jacketed cable with an 8-pin M12 male quick-disconnect connector | 24 ms | 91 |
| | **SLPE25-1810** | **SLPR25-1810** | **SLPP25-1810** | Integral Removable Disconnect (RD) | | |

* Lengths longer than 1250 mm are no longer available.

For other models:

- Anodized aluminum housing: Prior to the connection designation (if any) in the model number, add “A” for a clear (brushed) anodized aluminum finish and black endcaps (for example, **SLPE25-270A**). Pigtail QD models (for example, **SLPE25-270AP8**) have black PVC cable and QD overmold.
- ESD-safe models: Prior to the connection designation (if any) in the model number, add “N” for a nickel-plated housing and endcaps (for example, **SLPE25-270N**). Pigtail QD models (for example, **SLPE25-270NP8**) have black PVC cable and QD overmold.
- Cabled QD models require mating cordsets with an 8-pin M12 connector (such as **QDE-8..D**, **DEE2R-8..D**, or **CSB-M128..M1281**; see "Cordsets" on page 79).
- Integral RD models require mating cordsets with a removable disconnect connector (such as **RDLP-8..D**, **DELPE-8..D**, or **DELPE-11..D**; see "Cordsets" on page 79).

### 3.3.2 How to Order

1. Choose model, resolution (14 or 25 mm) and defined area.
2. Choose an Emitter (E), a Receiver (R), or a Pair (P).
3. Yellow housing is standard. To choose an optional housing finish, add A or N prior to the connection designation:
   - **A** for clear anodized aluminum finish with black endcaps (example, SLPE25-270A)
   - **N** for ESD-safe models with a nickel-plated housing and endcaps (example, SLPE25-270N)
4. Choose the connection: 300 mm M12/Euro-Style Pigtail QD or integral Removable Disconnect (RD).
5. Choose one cordset for each sensor or two cordsets for a pair. See "Cordsets" on page 79.
   - M12 Pigtail QD models for (example, SLPE..-270P8) require mating 8-pin M12 QD cordsets, such as:
     - QDE cordset with flying leads
     - DEE2R double-ended cordset
     - CSB series splitter cordset
   - Integral RD models for (example, SLPE..-270) require mating cordsets such as:
     - RDLP cordset with flying leads
     - DELPE double-ended cordset with M12 QD (requires additional mating 8-pin M12 QD cordset)
     - DELP cordset in cascade applications for connection of 2nd, 3rd, and 4th sensors
6. Choose an optional interfacing solution, such as an IM-T-9A or -11A interfacing model. See "Accessories" on page 79.

## 3.4 Operating Features

The Banner EZ-SCREEN LP Low-Profile Safety Light Curtain models described by this manual feature standard functions:

- Reduced Resolution (Floating Blanking) ("Reduced Resolution (Floating Blanking)" on page 44)
- Trip or Latch Output ("System Operation" on page 61)


© Banner Engineering Corp. All rights reserved.

- External Device Monitoring (EDM) ("External Device Monitoring" on page 50)
- Auxiliary Output — OSSD Follow or Fault ("Auxiliary (OSSD Follow/Fault) Output" on page 52)
- Scan Code setting ("System Operation" on page 61)
- Fixed Blanking (including Remote Teach) ("Fixed Blanking" on page 45)
- Emitter Test and Fault functions
- Inverted Display ("System Operation" on page 61)
- Cascading (available on SLPC.. models) ("Cascade" on page 90)

These functions are configured via DIP switches (behind the access door on the front of each sensor) and/or the sensor wiring configuration.

The sensing resolution is determined by the emitter and receiver model.

### 3.4.1 Cascadeable Models

Emitter and receiver SLPC.. models are capable of interconnecting up to four emitter/receiver pairs regardless of the resolution, the total number of beams, or the size of the defined area. The SLPC.. (cascadeable) models can also be used individually as stand-alone systems. They also can be cascaded with SLSC.. models.

Double-ended RD-style 24 AWG cordsets are required for connecting sensors in a cascade. (RD-to-QD cordsets are available to connect between SLPC.. and SLSC.. models.)

Maximum system response time for a cascade is dependent on the number of beams in each light screen, and the light screen's position in the cascade. It can be calculated in two ways:

- Individually for each light screen in the cascade (safety distance is calculated for each light screen in the cascade)
- Based on the worst-case maximum for the entire cascade (all light screens in the cascade have the same separation distance)

*Figure 3. Fixed-angle brackets facilitate cascading while maintaining 25 mm resolution*

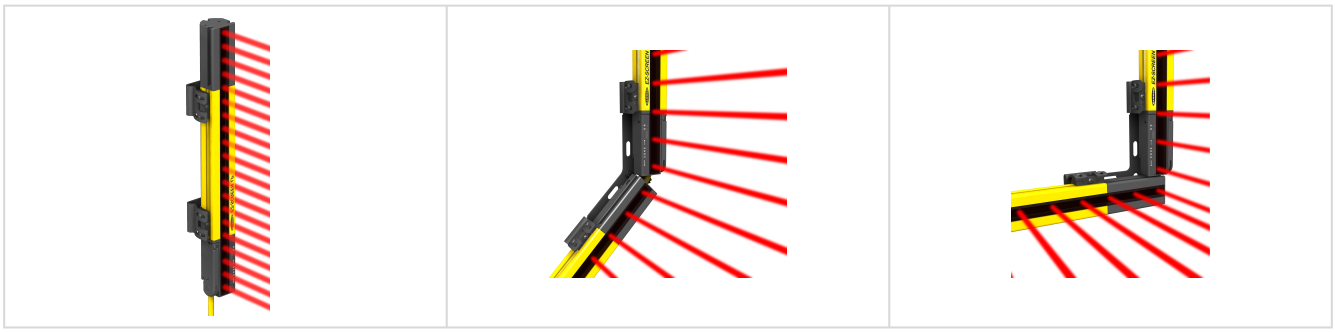

## 3.5 Control Reliability: Redundancy and Self-Checking

Redundancy requires that EZ-SCREEN LP circuit components be backed up to the extent that, if the failure of a single component will prevent effective machine stopping action when needed, that component must have a redundant counterpart which will perform the same function. The EZ-SCREEN LP is designed with redundant microprocessors.

Redundancy must be maintained whenever the EZ-SCREEN LP is in operation. Because a redundant system is no longer redundant after a component has failed, EZ-SCREEN LP is designed to monitor itself continuously. A component failure detected by or within the self-checking system causes a stop signal to be sent to the guarded machine and puts the EZ-SCREEN LP into a Lockout condition.

A recovery from this type of Lockout condition requires:

- Replacement of the failed component (to restore redundancy)
- The appropriate reset procedure

The Diagnostic Display is used to diagnose causes of a Lockout condition. See "Troubleshooting" on page 71.


© Banner Engineering Corp. All rights reserved.

# 3.6 Specifications

## 3.6.1 General Specifications

**Short Circuit Protection**

All inputs and outputs are protected from short circuits to +24 V DC or DC common

**Electrical Safety Class**

III (per IEC 61140: 1997)

**Safety Rating**

Type 4 per IEC 61496-1, -2

Category 4 PL e per EN ISO13849-1

SIL3 per IEC 61508; SIL CL3 per IEC 62061

PFHd: $4 \times 10^{-9}$

Proof Test Interval: 20 years

**Operating Range**

0.1 m to 7 m (4 in. to 23 ft) — Range decreases with use of mirrors and/or lens shields:

- Lens shields — approx 10% less range per shield
- Glass-surface mirrors — approx 8% less range per mirror

See the specific mirror datasheet for more information.

**Resolution**

14 mm or 25 mm, depending on model (Reduced Resolution Off)

**Effective Aperture Angle (EAA)**

Meets Type 4 requirements per IEC 61496-2

±2.5° at 3 m

**Operating Conditions**

0 °C to +55 °C (+32 °F to +131 °F)

95% maximum relative humidity (non-condensing)

**Enclosure**

Extruded aluminum housing with yellow polyester powder finish standard and well-sealed, rugged die-cast zinc end caps, acrylic lens cover, copolyester access cover Optional clear anodized or static-dissipative nickel-plated finish available. Nickel-plated models also have static-dissipative acrylic lens cover and nickel-plated end caps.

**Environmental Rating**

IP65

**Shock and Vibration**

Components have passed vibration and shock tests according to IEC 61496-1. This includes vibration (10 cycles) of 10-55 Hz at 0.35 mm (0.014 in) single amplitude (0.70 mm peak-to-peak) and shock of 10 g for 16 milliseconds (6,000 cycles).

**Mounting Hardware**

Emitter and receiver each are supplied with a pair of swivel end-mounting brackets and two swivel side-mount brackets. Models longer than 690 mm also require additional side-mount bracket(s) for center support. Mounting brackets are 14-gauge/1.9 mm cold-rolled steel, black zinc finish.

**Cables and Connections**

See "Accessories" on page 79 for recommended cables. If other cables are used with the EZ-SCREEN LP, the user must verify suitability of these cables for each application.

**Certifications**

Banner Engineering BV
Park Lane, Culliganlaan 2F bus 3
1831 Diegem, BELGIUM

Turck Banner LTD Blenheim House
Blenheim Court
Wickford, Essex SS11 8YT
GREAT BRITAIN

## 3.6.2 Emitter Specifications

**Supply Voltage at the Device**

24 V DC ±15% (use a SELV-rated power supply according to EN IEC 60950). The external voltage supply must be capable of buffering brief mains interruptions of 20 ms, as specified in IEC/EN 60204-1.

**Residual Ripple**

± 10% maximum

**Supply Current**

60 mA maximum, exclusive of Fault Out load

**Fault Output Switching Capacity**

Current-sourcing (PNP) solid-state output, 24 V DC at 250 mA maximum

**Status Indicators**

One bi-color (Red/Green) Status Indicator: indicates operating mode, lockout or power Off condition

7-Segment Diagnostic indicator (1 digit): indicates proper operation, scan code, or error code

**Wavelength of Emitter Elements**

Infrared LEDs, 850 nm at peak emission

**Remote Test Input**

Test mode is activated either by applying a low signal (less than 3 V DC) to emitter Test/Reset terminal for a minimum of 50 milliseconds, or by opening a switch connected between Test/Reset and +24 V DC for a minimum of 50 milliseconds. Beam scanning stops to simulate a blocked condition. A high signal at Test/Reset deactivates Test mode.

High Signal: 10 to 30 V DC

Low Signal: 0 to 3 V DC

Input Current: 35 mA inrush, 10 mA maximum

**Controls and Adjustments**

Scan Code Selection: 2-position switch (code 1 or 2). Factory default position is code 1.

Test/Reset: 2-position switch. Factory default position is Reset.

Invert Display: 2-position switch. Factory default position is Off (standard display).

Fault: 2-position switch. Factory default position is Off.


© Banner Engineering Corp. All rights reserved.

### 3.6.3 Receiver Specifications

**Supply Voltage at the Device**

24 V DC ±15% (use a SELV-rated power supply according to EN IEC 60950). The external voltage supply must be capable of buffering brief mains interruptions of 20 ms, as specified in IEC/EN 60204-1.

**Residual Ripple**

±10% maximum

**Supply Current (no load)**

150 mA maximum, exclusive of OSSD1 and OSSD2 loads (up to additional 0.5 A each) and Aux/Fault Out load (up to 0.25 A)

**Response Time**

Dependent on the number of sensing beams; see the models table for the number of beams and response time.

**CSSI Response Time (SLPC.. cascade models only)**

Response time for a cascade receiver due to opening contacts at the cascade interface (CSSI): 40 ms max (contacts must open for 60 ms minimum).

**EDM Input**

+24 V DC signals from external device contacts can be monitored (one-channel or no monitoring) via EDM1 terminal in the receiver.

High Signal: 10 to 30 V DC at 30 mA typical

Low Signal: 0 to 3 V DC

**Recovery Time**

**Blocked to Clear (OSSDs turn On; varies with total number of sensing beams and whether Sync beam is blocked):**

| Model | Beam 1 (Sync Beam) | All Other Beams |
|---|---|---|
| 14 mm | 109 ms to 800 ms | 33 ms to 220 ms |
| 25 mm | 81 ms to 495 ms | 25 ms to 152 ms |

**Reset Input**

Reset input must be high for 0.25 to 2 seconds and then low to reset the receiver

High Signal: 10 to 30 V DC at 30 mA typical

Low Signal: 0 to 3 V DC

Closed Switch Time: 0.25 to 2 seconds

**Output Signal Switching Devices (OSSDs)**

Two redundant solid-state 24 V DC, 0.5 A max. sourcing OSSD (Output Signal Switching Device) safety outputs. (Use optional interface modules for AC or larger DC loads.)

ON-State voltage: ≥ Vin-1.5 V DC

OFF-State voltage: 1.2 V DC maximum (0 to 1.2 V DC)

Maximum load capacitance: 1.0 µF

Minimum load inductance: 10 H

Leakage current: 0.50 mA maximum

OSSD test pulse width: 100 to 300 microseconds typical

OSSD test pulse period: 10 ms to 22 ms (varies with number of beams)

Switching current: 0 to 0.5 A

**Auxiliary Output Switching Capacity (OSSD/Fault)**

Current-sourcing (PNP) solid-state output, 24 V DC at 250 mA max.

**Controls and Adjustments**

Scan Code selection: 2-position switch (code 1 or 2). Factory default position is code 1

Trip/Latch Output selection: Redundant switches. Factory default position is T (trip).

**EDM/MPCE Monitor selection:** 2-position switch selects between 1- or 2-channel monitoring. Factory default position is 2-channel monitoring.

Reduced Resolution: Redundant switches. Factory default position is Off.

Aux./Fault: 2-position switch. Factory default position is Aux.

Invert Display: 2-position switch. Factory default position is Off (standard display).

**Status Indicators**

Amber Reset Indicator: indicates whether the System is ready for operation or requires a reset

Bi-color (red/green) Status indicator: indicates general system and output status

Bi-color (red/green) Zone Status indicators: indicate condition (clear or blocked beam) of a defined group of beams

7-Segment Diagnostic indicator (1 digit): indicates proper operation, scan code, error code, or total number of blocked beams

**Ambient Light Immunity**

>10,000 lux at 5° angle of incidence

**Strobe Light Immunity**

Totally immune to one Federal Signal Corp. "Fireball" model FB2PST strobe


© Banner Engineering Corp. All rights reserved.

Chapter Contents

4.1 Mechanical Installation Considerations ..... 19
4.2 Other Considerations ..... 24
4.3 Mounting System Components ..... 29

# Chapter 4 Mechanical Installation

The EZ-SCREEN LP system performance as a safety guarding device depends on:

- The suitability of the application
- The proper mechanical and electrical installation and interfacing to the guarded machine

**WARNING:**

- **Read this Section Carefully Before Installing the System**
- **Failure to follow these instructions could result in serious injury or death.**
- If all mounting, installation, interfacing, and checkout procedures are not followed properly, this Banner Engineering Corp. device cannot provide the protection for which it was designed.
- The user is responsible for ensuring that all local, state, and national laws, rules, codes, or regulations relating to the installation and use of this control system in any particular application are satisfied. Ensure that all legal requirements have been met and that all technical installation and maintenance instructions contained in this manual are followed.
- The user has the sole responsibility to ensure that this Banner Engineering Corp. device is installed and interfaced to the guarded machine by Qualified Persons, in accordance with this manual and applicable safety regulations. A Qualified person is a person who, by possession of a recognized degree or certificate of professional training, or who, by extensive knowledge, training and experience, has successfully demonstrated the ability to solve problems relating to the subject matter and work.

## 4.1 Mechanical Installation Considerations

The two primary factors that influence the layout of the EZ-SCREEN LP system mechanical installation are:

- Safety Distance (Minimum Distance) (see "Calculating the Safety Distance (Minimum Distance)" on page 19)
- Supplemental safeguarding/eliminating pass-through hazards (see "Reducing or Eliminating Pass-Through Hazards" on page 22)

Other considerations include:

- Emitter and Receiver Orientation (see "Emitter and Receiver Orientation" on page 27)
- Adjacent Reflective Surfaces (see "Adjacent Reflective Surfaces" on page 25)
- Use of Corner Mirrors (see "Use of Corner Mirrors" on page 26)
- Installation of Multiple Systems (see "Installation of Multiple Systems" on page 28)

**WARNING:**

- **Position the System Components Carefully**
- Failure to observe this warning could result in serious injury or death.
- Position the system components such that the hazard cannot be accessed by reaching over, under, around, or through the sensing field. Additional and supplemental guarding may be required.

### 4.1.1 Calculating the Safety Distance (Minimum Distance)

Safety Distance (Ds), also called Minimum Distance (S), is the minimum distance required between the defined area and the closest reachable hazard point. The distance is calculated so that when an object or a person is detected (by blocking a sensing beam), the EZ-SCREEN LP sends a stop signal to the machine, causing it to stop by the time the object or person can reach any machine hazard point.


© Banner Engineering Corp. All rights reserved.

The distance is calculated differently for U.S. and European installations. Both methods take into account several factors, including a calculated human speed, the total system stopping time (which itself has several components), and the depth penetration factor. After the distance has been determined, record the calculated distance on the Daily Checkout Card.

**WARNING:**

- **Calculate the Safety Distance (Minimum Distance)**
- Failure to establish and maintain the safety distance (minimum distance) could result in serious injury or death.
- Mount the components at a distance from the nearest hazard such that an individual cannot reach the hazard before cessation of the hazardous motion or situation. Calculate this distance using the supplied formulas, as described by ANSI B11.19 and ISO 13855. Mount the components more than 100 mm (4 in) away from the hazard, regardless of the calculated value.

**WARNING:** Reduced Resolutions increases Dpf (or C). Increase the depth penetration factor to calculate proper minimum distance when using a Reduced Resolution configuration. Always turn Reduced Resolution mode off when the larger minimum object detection size is not required.

*Figure 4. Safety distance (minimum distance) and hard (fixed) guarding*

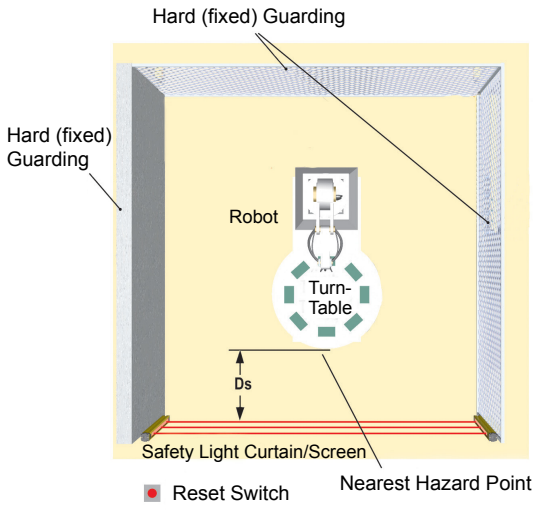


## Formula and Examples

### US Applications

The Safety (Separation) Distance formula for U.S. applications:

```
Ds = K × (Ts + Tr) + Dpf
```

**Ds**

the Safety Distance, in inches

**K**

1600 mm per second (or 63 in per second), the OSHA 29CFR1910.217, and ANSI B11.19 recommended hand-speed constant (see Note 1 below)

**Ts**

the overall stop time of the machine (in seconds) from the initial stop signal to the final ceasing of all motion, including stop times of all relevant control elements (for example, IM-T-.. Interface Modules) and measured at maximum machine velocity (see Note 3 below)

**Tr**

the maximum response time, in seconds, of the EZ-SCREEN LP emitter/receiver pair (depending on model)

**Dpf**

the added distance due to the depth penetration factor as prescribed in OSHA 29CFR1910.217, and ANSI B11.19 for U.S. applications. See Depth Penetration Factor (Dpf) table below or calculate using the formula (in mm): Dpf = 3.4 × (S - 7) where S is the resolution of the light curtain (for S ≤ 63 mm).

### European Applications

The Minimum Distance formula for European applications:


© Banner Engineering Corp. All rights reserved.

```
S = (K × T) + C
```

**S**

the Minimum Distance, in mm, from danger zone to light screen center line; minimum allowable distance is 100 mm ( 175 mm for non-industrial applications), regardless of calculated value

**K**

hand-speed constant (see Note 2 below); **2000 mm/s** (for Minimum Distances ≤ 500 mm) **1600 mm/s** (for Minimum Distances > 500 mm)

**T**

the overall machine stopping response time (in seconds), from the physical initiation of the safety device and the machine coming to a stop (or the hazard removed). This can be broken down into two parts: **Ts** and **Tr** where **T** = **Ts** + **Tr**

**C**

the additional distance, in mm, based on intrusion of a hand or object towards the danger zone prior to actuation of a safety device. Calculate using the formula (in mm):

```
C = 8 × (d - 14)
```

where `d` is the resolution of the light curtain (for `d` ≤ 40 mm), or use 850 mm for C.

*Table 2. Depth Penetration Factor (Dpf)*

| Reduced Resolution | Depth Penetration Factor (Dpf) | |
|---|---|---|
| | 14 mm Systems | 25 mm Systems |
| OFF | 24 mm (0.94 in) | 61 mm (2.4 in) |
| ON | 92 mm (3.6 in) | 915 mm (36 in) |

**Notes:**

1. The OSHA-recommended hand speed constant **K** has been determined by various studies and, although these studies indicate speeds of 1600 mm/sec. (63 in/sec.) to more than 2500 mm/sec. (100 in/sec.), they are not conclusive determinations. Consider all factors, including the physical ability of the operator, when determining the value of **K** to be used.
2. The recommended hand speed constant **K**, derived from data on approach speeds of the body or parts of the body as stated in ISO 13855.
3. **Ts** is usually measured by a stop-time measuring device. If the machine manufacturer's specified stop time is used, at least 20% should be added to allow for possible clutch/ brake system deterioration. This measurement must take into account the slower of the two MPCE channels, and the response time of all devices or controls that react to stop the machine.

**WARNING:**

- **Stop time (Ts) must include the response time of all devices or controls that react to stop the machine**
- If all devices are not included, the calculated safety distance (Ds or S) will be too short, which can lead to serious injury or death.
- Include the stop time of all relevant devices and controls in your calculations.
- If required, each of the two machine primary control elements (MPCE1 and MPCE2) must be capable of immediately stopping the dangerous machine motion, regardless of the state of the other. These two channels of machine control need not be identical, but the stop time performance of the machine (Ts, used to calculate the safety distance) must take into account the slower of the two channels.

## Examples

### U.S. Applications, Model SLSP14-550

**K**

63 in. per second (the hand speed constant set by OSHA)

**Ts**

0.32 (0.250 second is specified by the machine manufacturer; plus 20% safety factor; plus 20 ms for interface module IM-T-9A response time)

**Tr**

0.0165 seconds (the specified response time of an SLSP14-550 EZ-SCREEN LP)

**Dpf**

3.6 in (14 mm resolution, Reduced Resolution ON)

Substitute the numbers into the formula as follows:

```
Ds = K × ( Ts + Tr ) + Dpf
```


© Banner Engineering Corp. All rights reserved.

```
Ds = 63 × (0.32 + 0.0165) + 3.6 = 24.8 in
```

Mount the EZ-SCREEN LP emitter and receiver so that no part of the defined area will be closer than 24.8 in. to the closest reachable hazard point on the guarded machine.

**European Applications, Model SLSP14-550**

**K**

1600 mm per second

**T**

0.32 (0.250 seconds specified by machine manufacturer; plus 20% safety factor; plus 20 ms interface module response time), plus 0.0165 seconds (the specified **SLSP14-550** response time)

**C**

8 x (30 - 14) = 128 mm (14 mm resolution, Reduced Resolution ON)

Substitute the numbers into the formula as follows:

```
S = (K × T ) + C
S = (1600 x 0.336) + 128 = 665.6 mm
```

Mount the EZ-SCREEN LP emitter and receiver so that no part of the defined area will be closer than 665.6 mm to the closest reachable hazard point on the guarded machine.

### 4.1.2 Reducing or Eliminating Pass-Through Hazards

A *pass-through* hazard is associated with applications where personnel may pass through a safeguard, such as the EZ-SCREEN LP Low-Profile Safety Light Curtain (which issues a stop command to remove the hazard), and then continues into the guarded area. This is common in access and perimeter guarding applications. Subsequently, their presence is no longer detected, and the related danger becomes the unexpected start or restart of the machine while personnel are within the guarded area.

A pass-through hazard typically results from large safety distances calculated from long stopping times, large minimum object sensitivities, reach-over, reach-through, or other installation considerations. A pass-through hazard can be generated with as little as 75 mm (3 in) between the sensing field and the machine frame or hard (fixed) guarding.

Eliminate or reduce pass-through hazards whenever possible. While it is recommended to eliminate the pass-through hazard altogether, this may not be possible due to machine layout, machine capabilities, or other application considerations.

One solution is to ensure that personnel are continually sensed while within the hazardous area. This can be accomplished by using supplemental safeguarding, such as described by the safety requirements in ANSI B11.19 or other appropriate standards.

An alternative method is to ensure that once the safeguarding device is tripped it will latch and will require a deliberate manual action to reset. This method of safeguarding relies upon the location of the reset switch as well as safe work practices and procedures to prevent an unexpected start or restart of the guarded machine. The EZ-SCREEN LP Low-Profile Safety Light Curtain provides a configurable Manual Start/Restart (Latch Output) function for these applications.

**WARNING:**

- **Use of the Banner device for Access or Perimeter Guarding**
- Failure to observe this warning could result in serious injury or death.
- If a Banner device is installed in an application that results in a pass-through hazard (for example, perimeter guarding), either the Banner device or the Machine Primary Control Elements (MPCEs) of the guarded machine must cause a Latched response following an interruption of the defined area.
- The reset of this Latched condition may only be achieved by actuating a reset switch that is separate from the normal means of machine cycle initiation.


© Banner Engineering Corp. All rights reserved.

**WARNING:**

- **Perimeter guarding applications**
- Failure to observe this warning could result in serious injury or death.
- Use lockout/tagout procedures per ANSI Z244.1, or use additional safeguarding as described by ANSI B11.19 safety requirements or other applicable standards if a passthrough hazard cannot be eliminated or reduced to an acceptable level of risk.

### 4.1.3 Supplemental Safeguarding

As described in "Calculating the Safety Distance (Minimum Distance)" on page 19, properly position the EZ-SCREEN LP such that an individual cannot reach through the defined area and access the hazard point before the machine has stopped.

Additionally, the hazard cannot be accessible by reaching around, under, or over the defined area. To accomplish this, supplemental guarding (mechanical barriers, such as screens or bars), as described by ANSI B11.19 safety requirements or other appropriate standards, must be installed. Access will then be possible only through the defined area of the EZ-SCREEN LP System or through other safeguarding that prevents access to the hazard (see "Figure: An example of supplemental safeguarding" on page 23).

The mechanical barriers used for this purpose are typically called "hard (fixed) guarding"; there must be no gaps between the hard (fixed) guarding and the defined area. Any openings in the hard (fixed) guarding must comply with the safe opening requirements of ANSI B11.19 or other appropriate standard.

*Figure 5. An example of supplemental safeguarding*

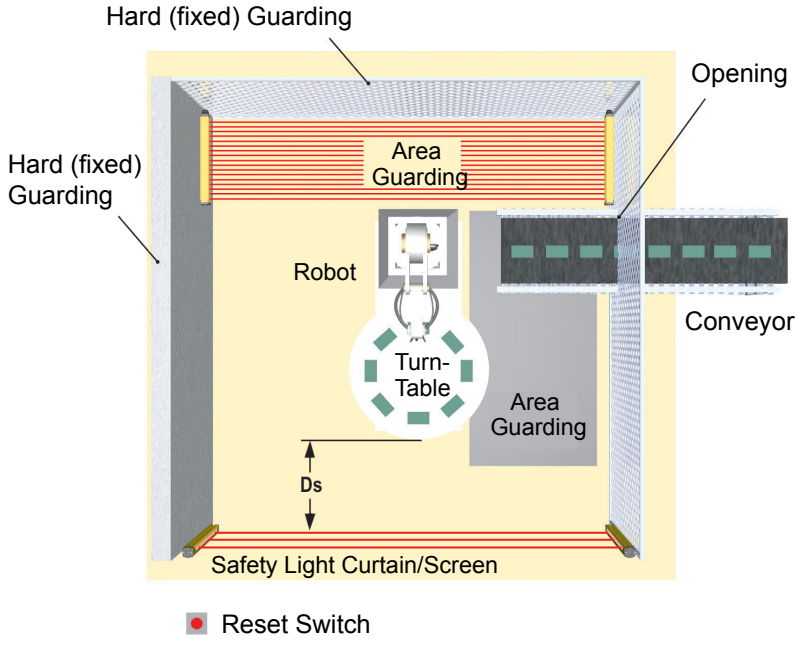


"Figure: An example of supplemental safeguarding" on page 23 shows an example of supplemental safeguarding inside a robotic work cell. The EZ-SCREEN LP, in conjunction with the hard (fixed) guarding, is the primary safeguard. Supplemental safeguarding (such as a horizontal-mounted safety light screen as an area guard) is required in areas that cannot be viewed from the reset switch (for example, behind the robot and the conveyor). Additional supplemental safeguarding may be required to prevent clearance or trapping hazards (for example, a safety mat as an area guard between the robot, the turntable, and the conveyor).


© Banner Engineering Corp. All rights reserved.

**WARNING:**

- **The hazard must be accessible only through the sensing field**
- Incorrect system installation could result in serious injury or death.
- The installation of the EZ-SCREEN LP must prevent any individual from reaching around, under, over or through the defined area and into the hazard without being detected.
- See OSHA CFR 1910.217, ANSI B11.19, and/or ISO 14119, ISO 14120 and ISO 13857 for information on determining safety distances and safe opening sizes for your guarding device. Mechanical barriers (for example, hard (fixed) guarding) or supplemental safeguarding might be required to comply with these requirements.

# 4.2 Other Considerations

## 4.2.1 Reset Switch Location

**The reset switch must be mounted at a location that complies with the warning and guidelines below.** If any hazardous areas are not in view from the switch location, additional means of safeguarding must be provided. The switch should be protected from accidental or unintended actuation (for example, through the use of rings or guards).

A key-actuated reset switch provides some operator or supervisory control, as the key can be removed from the switch and taken into the guarded area. However, this does not prevent unauthorized or inadvertent resets due to spare keys in the possession of others, or additional personnel entering the guarded area unnoticed. When considering where to locate the reset switch, follow the guidelines below.

**WARNING:**

- **Install reset switches properly**
- Failure to properly install reset switches could result in serious injury or death.
- Install reset switches so that they are accessible only from outside, and in full view of, the safeguarded space. Reset switches cannot be accessible from within the safeguarded space. Protect reset switches against unauthorized or inadvertent operation (for example, through the use of rings or guards). If there are any hazardous areas that are not visible from the reset switches, provide additional safeguarding.

All reset switches must be:

- Outside the guarded area
- Located to allow the switch operator a full, unobstructed, view of the entire guarded area while the reset is performed
- Out of reach from within the guarded area
- Protected against unauthorized or inadvertent operation (such as through the use of rings or guards).

**IMPORTANT:** Resetting a safeguard must not initiate hazardous motion. Safe work procedures require a start-up procedure to be followed and the individual performing the reset to verify that the entire hazardous area is clear of all personnel before each reset of the safeguard is performed. If any area cannot be observed from the reset switch location, additional supplemental safeguarding must be used: at a minimum, visual and audible warnings of machine start-up.


© Banner Engineering Corp. All rights reserved.

## 4.2.2 Adjacent Reflective Surfaces

A reflective surface located adjacent to the defined area may deflect one or more beams around an object in the defined area. In the worst case, an optical short circuit may occur, allowing an object to pass undetected through the defined area.

**WARNING:**

- **Do not install the system near reflective surfaces**
- Reflective surfaces could reflect the sensing beam(s) around an object or person within the defined area, preventing detection by the system. Failure to prevent reflection problems results in incomplete guarding and an optical short circuit that could result in serious injury or death.
- Do not locate the defined area near a reflective surface. Perform the trip test, as described in the product documentation, to detect such reflection(s).

This reflective surface may result from shiny surfaces or glossy paint on the machine, the workpiece, the work surface, the floor, or the walls. Beams deflected by reflective surfaces are discovered by performing the trip test and the periodic checkout procedures. To eliminate problem reflections:

- If possible, relocate the sensors to move the beams away from the reflective surface(s), being careful to maintain adequate separation distance.
- Otherwise, if possible, paint, mask, or roughen the shiny surface to reduce its reflectivity.
- Where these are not possible (as with a shiny workpiece or machine frame), determine the worst-case resolution resulting from the optical short circuit and use the corresponding depth penetration factor (Dpf or C) in the Safety Distance (Minimum Distance) formula; or mount the sensors in such a way that the receiver's field of view and/or the emitter's spread of light are restricted from the reflective surface.
- Repeat the trip test (see "Perform a Trip Test" on page 46) to verify these changes have eliminated the problem reflection(s). If the workpiece is especially reflective and comes close to the defined area, perform the trip test with the workpiece in place.

*Figure 6. Adjacent Reflective Surfaces*

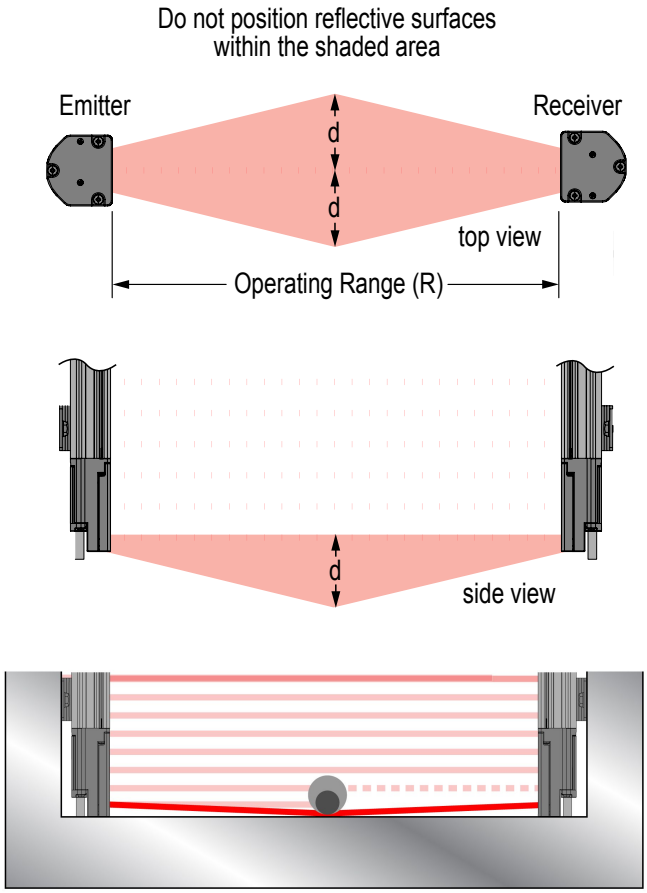


For 0.1 m to 3 m (4 in to 10 ft) Operating range: d = 0.13 m (5 in)


© Banner Engineering Corp. All rights reserved.

For Operating range > 3 m (> 10 ft): d = 0.0437 × R (m or ft)

At the midpoint of the defined area, a test piece (represented by the darker circle) with the specified system resolution does not cause a blocked condition due to an optical short circuit. Green Zone indicator lights are On and the OSSDs are On. Increasing the size of the test piece to block additional beams causes a blocked condition. The size of the test piece required to do this determines the actual resolution. Use the table below to calculate Dpf or Factor C when a shiny surface causes an optical short circuit.

| Test Piece Model | Resolution | Depth Penetration Factor for U.S. Applications | Factor C for European Applications |
|---|---|---|---|
| STP-13 | 14 mm | 24 mm (1 in) | 0 mm |
| STP-2 | 19 mm | 41 mm (1.6 in) | 40 mm (1.6 in) |
| STP-16 | 25 mm | 61 mm (2.5 in) | 88 mm (3.5 in) |
| STP-14 | 30 mm | 78 mm (3 in) | 128 mm (5 in) |
| STP-4 | 32 mm | 85 mm (3.3 in) | 144 mm (5.7 in) |
| STP-17 | 34 mm | 92 mm (3.6 in) | 160 mm (6.3 in) |
| STP-1 | 38 mm | 106 mm (4.2 in) | 192 mm (7.6 in) |
| STP-3 | 45 mm | 129 mm (5 in) | 850 mm (33.5 in) |
| STP-8 | 51 mm | 150 mm (5.9 in) | 850 mm (33.5 in) |
| STP-5 | 58 mm | 173 mm (6.8 in) | 850 mm (33.5 in) |
| STP-15 | 60 mm | 180 mm (7 in) | 850 mm (33.5 in) |
| STP-12 | 62 mm | 187 mm (7.4 in) | 850 mm (33.5 in) |

### 4.2.3 Use of Corner Mirrors

EZ-SCREEN LP may be used with one or more corner mirrors. Mirrors are not allowed for applications that would allow undetected personnel access into the safeguarded area. The use of glass-surface corner mirrors reduces the maximum specified emitter/receiver separation by approximately 8 percent per mirror, as follows:

*Table 3. Light Curtain Maximum Range*

| Light Curtain Series | 0 Mirrors | 1 Mirror | 2 Mirrors | 3 Mirrors | 4 Mirrors |
|---|---|---|---|---|---|
| SLC4 Safety Light Curtain | 2 m (6.6 ft) | 1.8 m (5.9 ft) | 1.6 m (5.2 ft) | 1.5 m (4.9 ft) | 1.4 m (4.6 ft) |
| EZ-SCREEN® LP Basic (SLPVA) | 4 m (13 ft) | 3.7 m (12.1 ft) | 3.4 m (11.2 ft) | 3.1 ft m (10.3 ft) | 2.8 m (9.2 ft) |
| 14 mm EZ-SCREEN® (SLS) | 6 m (20 ft) | 5.6 m (18.4 ft) | 5.2 m (17.0 ft) | 4.8 m (15.7 ft) | 4.4 m (14.5 ft) |
| EZ-SCREEN® LP (SLP) | 7 m (23 ft) | 6.5 m (21.2 ft) | 6.0 m (19.5 ft) | 5.5 m (18.0 ft) | 5.1 m (16.6 ft) |
| EZ-SCREEN® LS Basic (SLLV) | 8 m (26.2 ft) | 7.4 m (24.3 ft) | 6.8 m (22.3 ft) | 6.2 m (20.3 ft) | 5.7 m (18.7 ft) |
| EZ-SCREEN® LS (SLL) | 12 m (39 ft) | 11 m (36 ft) | 10.1 m (33 ft) | 9.3 m (30.5 ft) | 8.6 m (28 ft) |
| S4B Safety Light Curtain | 12 m (39 ft) | 11 m (36 ft) | 10.1 m (33 ft) | 9.3 m (30.5 ft) | 8.6 m (28 ft) |
| EZ-SCREEN® Type 2 (LS2) | 15 m (50 ft) | 13.8 m (45 ft) | 12.7 m (42 ft) | 11.7 m (38 ft) | 10.8 m (35 ft) |
| 30 mm EZ-SCREEN® (SLS) | 18 m (60 ft) | 16.8 m (55 ft) | 15.5 m (51 ft) | 14.3 m (47 ft) | 13.1 m (43 ft) |

See the specific mirror datasheet or www.bannerengineering.com for more information.

If mirrors are used, the difference between the angle of incidence from the emitter to the mirror and from the mirror to the receiver must be between 45° and 120° (see "Figure: Using EZ-SCREEN LP sensors in a retroreflective mode" on page 27). If placed at a sharper angle, an object in the light screen may deflect beam(s) to the receiver, preventing the object from being detected, also know as false proxing. Angles greater than 120° result in difficult alignment and possible optical short circuits.

**WARNING:**

- **Retroreflective Mode Installation**
- Failure to follow these instructions may create unreliable sensing and may result in serious injury or death.
- Do not install emitters and receivers in retroreflective mode with less than a 45° angle of incidence. Install emitters and receivers at an appropriate angle.


© Banner Engineering Corp. All rights reserved.

*Figure 7. Using EZ-SCREEN LP sensors in a retroreflective mode*

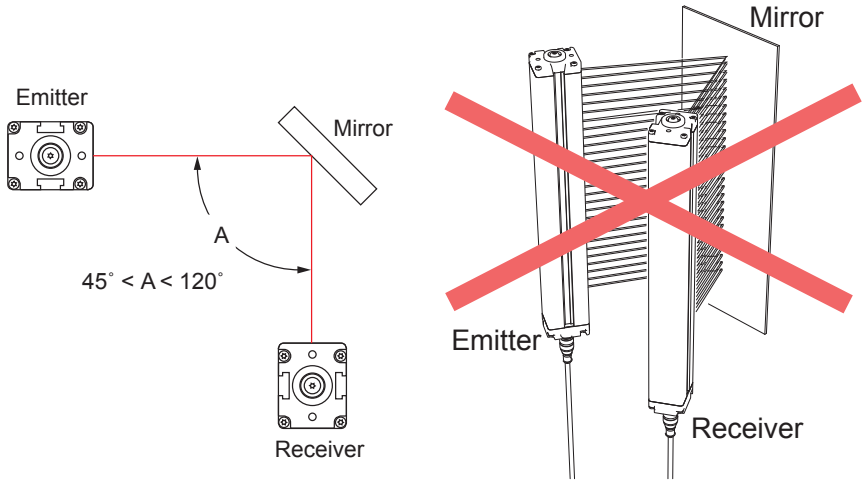


## 4.2.4 Emitter and Receiver Orientation

The emitter and receiver must be mounted parallel to each other and aligned in a common plane, with both machine interface cable ends pointing in the same direction.

Never mount the emitter with its machine interface cable end oriented in the opposite direction of the cable end of the receiver. If this occurs, voids in the light curtain may allow objects or personnel to pass through the defined area undetected.

The emitter and receiver may be oriented in a vertical or horizontal plane, or at any angle between horizontal and vertical, as long as they are parallel to each other and their cable ends point in the same direction. Verify that the light curtain completely covers all access to the hazard point that is not already protected by hard (fixed) guarding or other supplemental guarding.

**WARNING:**

- **Properly install system components**
- Incorrectly orienting the system components impairs the performance of the system and results in incomplete guarding, which can result in serious injury or death.
- Install the system components with their corresponding cable ends pointing in the same direction.

*Figure 8. Examples of Correct Emitter/Receiver Orientation*

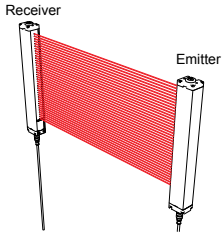


Both cable ends down

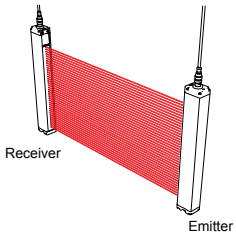


Both cable ends up

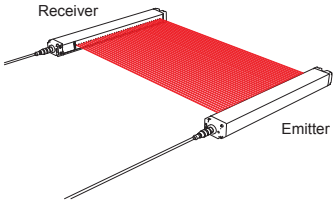


Orientation parallel to floor with both cable ends pointing in the same direction


© Banner Engineering Corp. All rights reserved.

*Figure 9. Examples of Incorrect Emitter/Receiver Orientation*

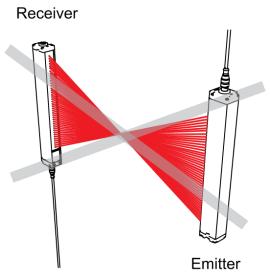


Cable ends point in opposite directions

**Problem:** Voids in defined area

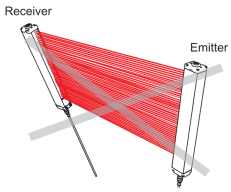


Emitter and receiver not parallel to each other

**Problem:** Reduced excess gain

## 4.2.5 Installation of Multiple Systems

Whenever two or more EZ-SCREEN LP emitter and receiver pairs are adjacent to one another, optical crosstalk may take place between the systems. To minimize optical crosstalk, alternate the positions of the emitters and receivers or alternate Scan Codes.

When three or more systems are installed in the same plane (as shown), optical crosstalk may occur between sensor pairs whose emitter and receiver lenses are oriented in the same direction. In this situation, eliminate optical crosstalk by mounting these sensor pairs exactly in line with each other within one plane or by adding a mechanical barrier between the pairs.

To further aid in avoiding crosstalk, the sensors feature two selectable scan codes. A receiver set to one scan code will not respond to an emitter set to another code.

*Figure 10. Two systems installed in a horizontal plane*

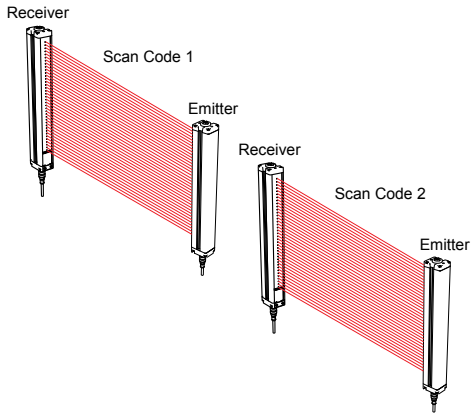


*Figure 11. Two or three systems stacked (or alternate receiver/emitter positions)*

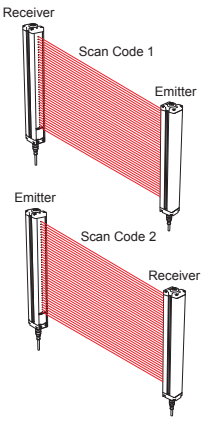


Continued on page 29


© Banner Engineering Corp. All rights reserved.

Continued from page 28

*Figure 12. Two systems installed at right angles*

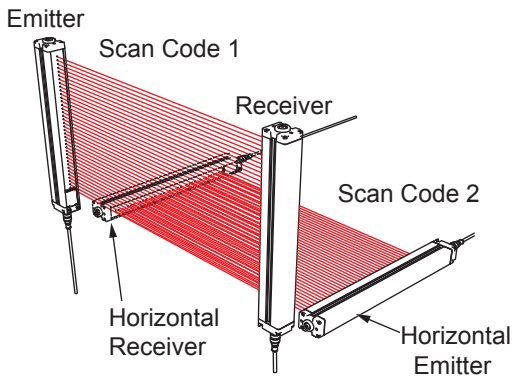


*Figure 13. Multiple systems installed in a line*

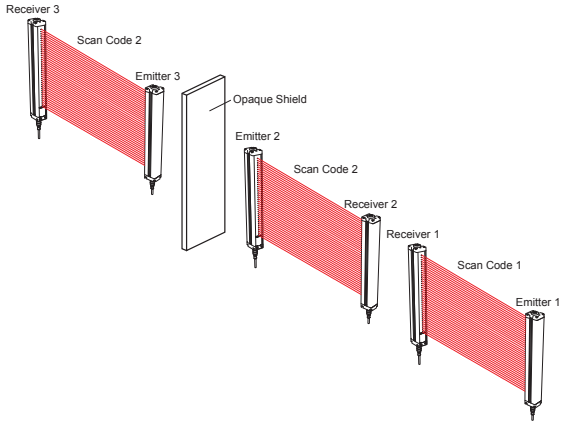


**WARNING:**

- **Properly connect multiple pairs of sensors**
- Connecting multiple output signal switching devices (OSSD) safety outputs to one interface module or otherwise parallel OSSD outputs can result in serious bodily injury or death, and is prohibited.
- Do not connect multiple pairs of sensors to a single device.

**WARNING:**

- **Use a scan code**
- If you do not use a scan code, a receiver can synchronize to the signal from the wrong emitter, reducing the safety function of the light curtain and creating an unsafe condition that could result in serious injury or death.
- Configure adjacent systems to use different scan codes (for example, set one system to use scan code 1 and the other system to use scan code 2). Perform a trip test to confirm the light curtain function.

# 4.3 Mounting System Components

## 4.3.1 Overview of Emitter/Receiver Mounting Hardware

### Mounting Hardware

Emitter/receiver pairs can be spaced from 0.1 m (4 in) to 7 m (23 ft) apart. This distance is reduced if corner mirrors are used.

Each sensor is shipped with two end-cap brackets (**LPA-MBK-11**) and at least two side-mount brackets (**LPA-MBK-12**). The supplied end-cap brackets allow 360° rotation. Side-mount brackets allow 30° rotation in one direction, and 10° in the other (see "Mounting the End-Cap Brackets" on page 30 and "Mounting Side-Mount Brackets" on page 32). Sidemount brackets may be mounted on either or both sides of the housing. If additional rotation is required, see the available accessory brackets.

Center mounting brackets must be used with longer sensors, if they are subject to shock or vibration. In such situations, the sensors are designed to be mounted with up to 690 mm unsupported distance (between brackets). Sensors 830 mm and longer are supplied with one or more additional side brackets for center-mounting.


© Banner Engineering Corp. All rights reserved.

## Mounting the Optional LPA-MBK-10 End-Mount Brackets

*Figure 14. End-Mount Brackets*

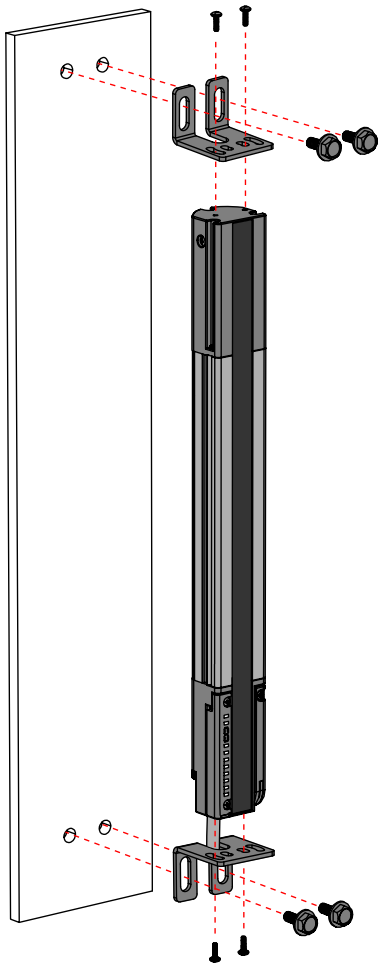

*Figure 15. ±20° Rotation*

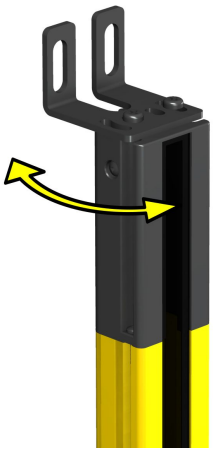

- Two brackets are supplied with the accessory kit.
- Brackets are designed to mount directly to MSA Series stands using the hardware supplied with the stands.

**IMPORTANT:** The connector ends of both sensors must point in the same direction (see "Emitter and Receiver Orientation" on page 27). Loosely mount the brackets to the desired surface using the supplied M5 bolts and nuts, or user-supplied hardware. Brackets may face in or out, as desired.

1. From a common point of reference (ensuring the calculated minimum safety distance), measure to position the emitter and receiver in the same plane, with their midpoints directly opposite each other.
2. Attach the end-cap bracket plate to each end of the sensor, using the supplied M3 × 6 screws.
3. Position the emitter and receiver in their brackets, as shown in "Emitter and Receiver Orientation" on page 27. Loosely attach the front bracket plate to the bracket, at each end.
4. Verify that the sensor windows directly face each other. Measure from a reference plane, for example, a level building floor, to the same point(s) on the emitter and receiver to verify their mechanical alignment. Use a carpenter's level, a plumb bob, or the optional LAT-1 Laser Alignment Tool (see "Alignment Aids" on page 89) or check the diagonal distances between the sensors, to achieve mechanical alignment. Final alignment procedures are explained in "Initial Checkout Procedure" on page 41.
5. Tighten all fasteners.


© Banner Engineering Corp. All rights reserved.

## Mounting the LPA-MBK-11 End-Mount Brackets

*Figure 16. End-Mount Brackets*

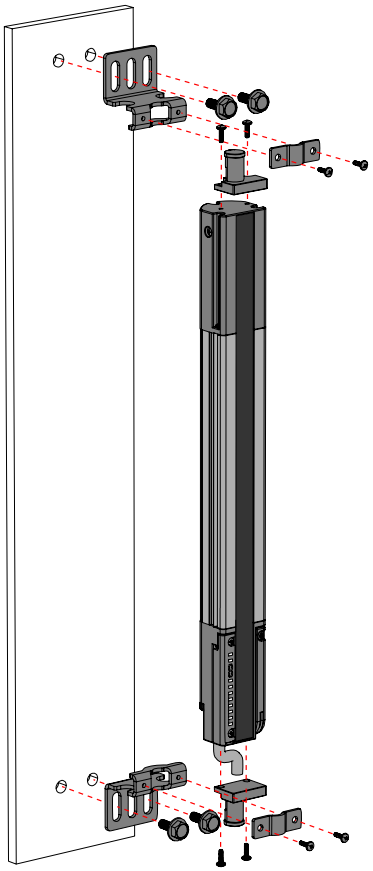

*Figure 17. 360° Rotation*

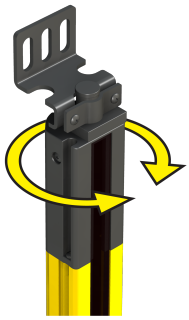

- Two brackets are supplied with each emitter and receiver.
- Brackets are designed to mount directly to MSA Series stands using the hardware supplied with the stands.
- See "Accessory Mounting Brackets" on page 87 for mounting bracket dimensions.

**IMPORTANT:** The connector ends of both sensors must point in the same direction (see "Emitter and Receiver Orientation" on page 27). Loosely mount the brackets to the desired surface using the supplied M5 bolts and nuts, or user-supplied hardware. Brackets may face in or out, as desired.

1. From a common point of reference (ensuring the calculated minimum safety distance), measure to position the emitter and receiver in the same plane, with their midpoints directly opposite each other.
2. Attach the end-cap bracket plate to each end of the sensor, using the supplied M3x6 screws.
3. Position the emitter and receiver in their brackets, as shown in "Emitter and Receiver Orientation" on page 27. Loosely attach the front bracket plate to the bracket, at each end.
4. Verify that the sensor windows directly face each other. Measure from a reference plane, for example, a level building floor, to the same point(s) on the emitter and receiver to verify their mechanical alignment. Use a carpenter’s level, a plumb bob, or the optional LAT-1 Laser Alignment Tool (see "Alignment Aids" on page 89) or check the diagonal distances between the sensors, to achieve mechanical alignment. Final alignment procedures are explained in "Initial Checkout Procedure" on page 41.
5. Tighten all fasteners.


© Banner Engineering Corp. All rights reserved.

## Mounting the LPA-MBK-12 Side-Mount Brackets

*Figure 18. Side-Mount Brackets*

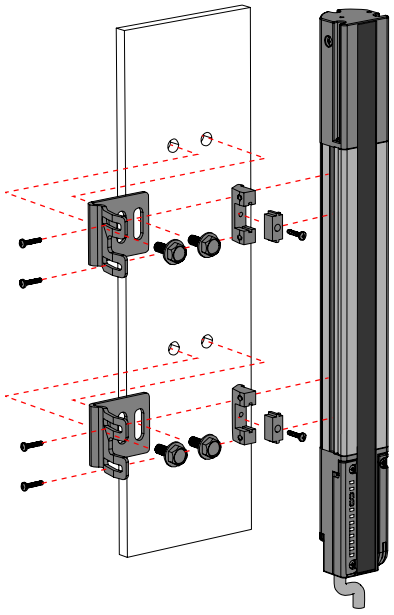

*Figure 19. 360° Rotation*

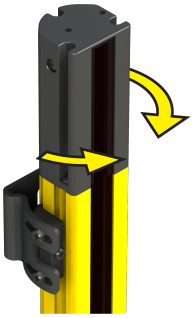

**NOTE:**

- Two or more side-mount brackets are supplied with each emitter and receiver. Emitters and Receivers 830 mm and longer also include an additional side-mount bracket for center support.
- The sensors are designed to be mounted with up to 690 mm of unsupported distance between brackets.

1. From a common point of reference (ensuring the calculated minimum safety distance), measure to locate the emitter and receiver in the same plane, with their midpoints directly opposite each other.

   **IMPORTANT:** The connector ends of both sensors must point in the same direction (see "Emitter and Receiver Orientation" on page 27).

2. Mount the emitter and receiver mounting brackets to the desired surface, using the supplied M5 bolts and nuts or user-supplied hardware.
3. Attach the 2-piece clamp to the sensor housing side channels (either side of the housing) at the appropriate locations, using the supplied M3 × 6 screws.
4. Attach the clamp to the bracket, using the supplied M5 screws.
5. Position the emitter and receiver windows directly facing each other. Measure from a reference plane, for example, a level building floor, to the same point(s) on the emitter and receiver to verify their mechanical alignment. Use a carpenter’s level, a plumb bob, or the optional LAT-1 Laser Alignment Tool (see "Alignment Aids" on page 89) or check the diagonal distances between the sensors, to achieve mechanical alignment. Final alignment procedures are explained in "Initial Checkout Procedure" on page 41.
6. Tighten all fasteners.

### Bracket Assembly Instructions

An M2 or #1 Phillips screwdriver is needed for access to the DIP switches and for preassembly of the mounting brackets. Final assembly (tightening) of the mounting bracket should be accomplished with a #1 Phillips screwdriver or 3/16 in. / 5 mm “thin-walled” nut driver to achieve the listed torque specifications. Sensors may be mounted with side-mount brackets, end-mount brackets, or a combination of both.


© Banner Engineering Corp. All rights reserved.

*Figure 20. End-mount hardware attachment*

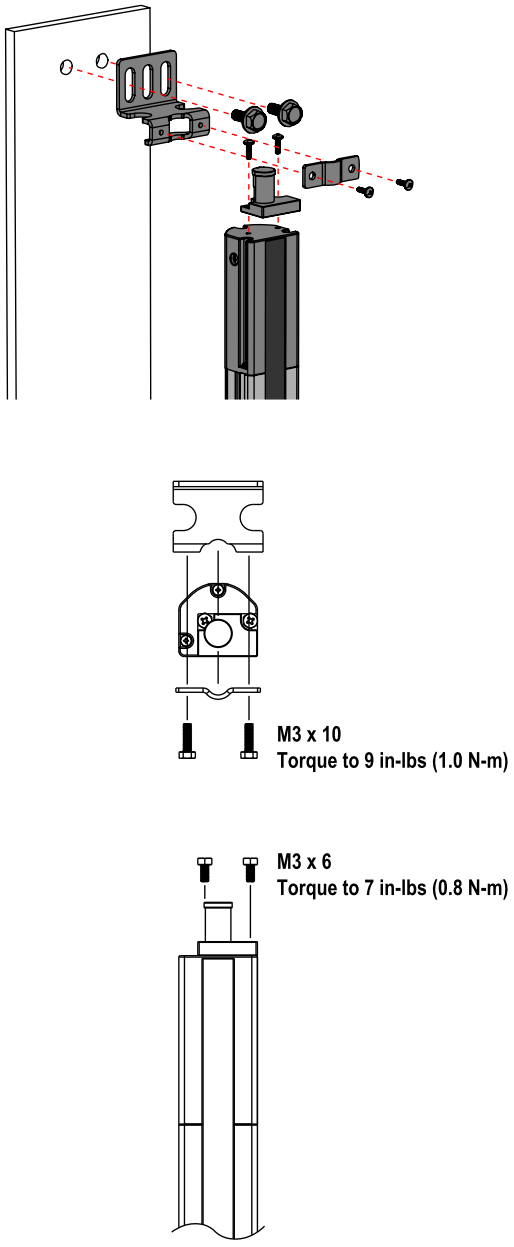


*Figure 21. Side-mount hardware attachment*

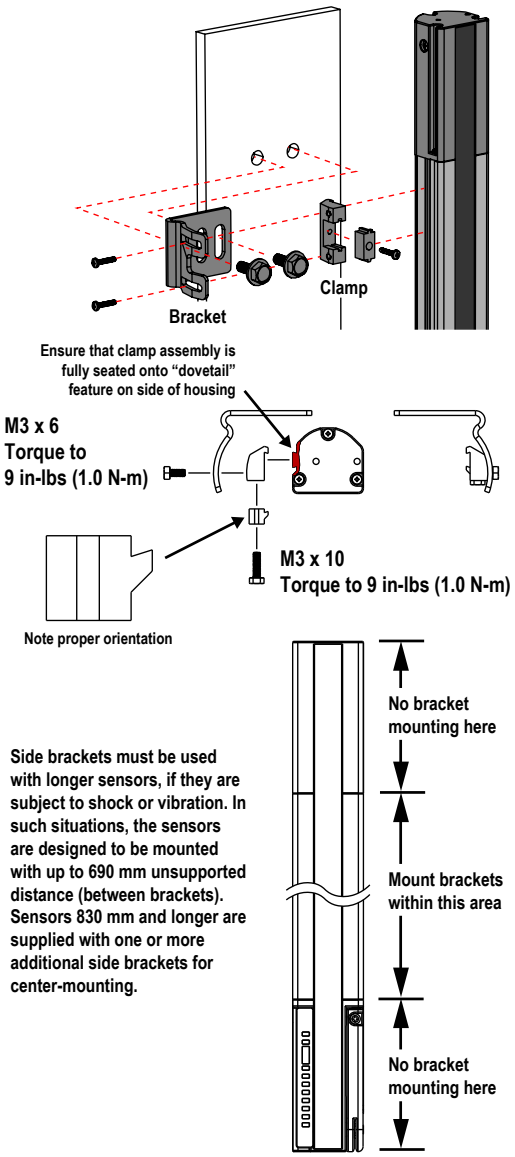


Side brackets must be used with longer sensors, if they are subject to shock or vibration. In such situations, the sensors are designed to be mounted with up to 690 mm unsupported distance (between brackets). Sensors 830 mm and longer are supplied with one or more additional side brackets for center-mounting.


© Banner Engineering Corp. All rights reserved.

## Installing and Mounting the Optional LPA-MBK-16 Side-Mount Bracket

Use a 3 mm hex driver to tighten the mounting bracket and achieve the listed torque specifications.

*Figure 22. Installing the optional side-mount bracket*

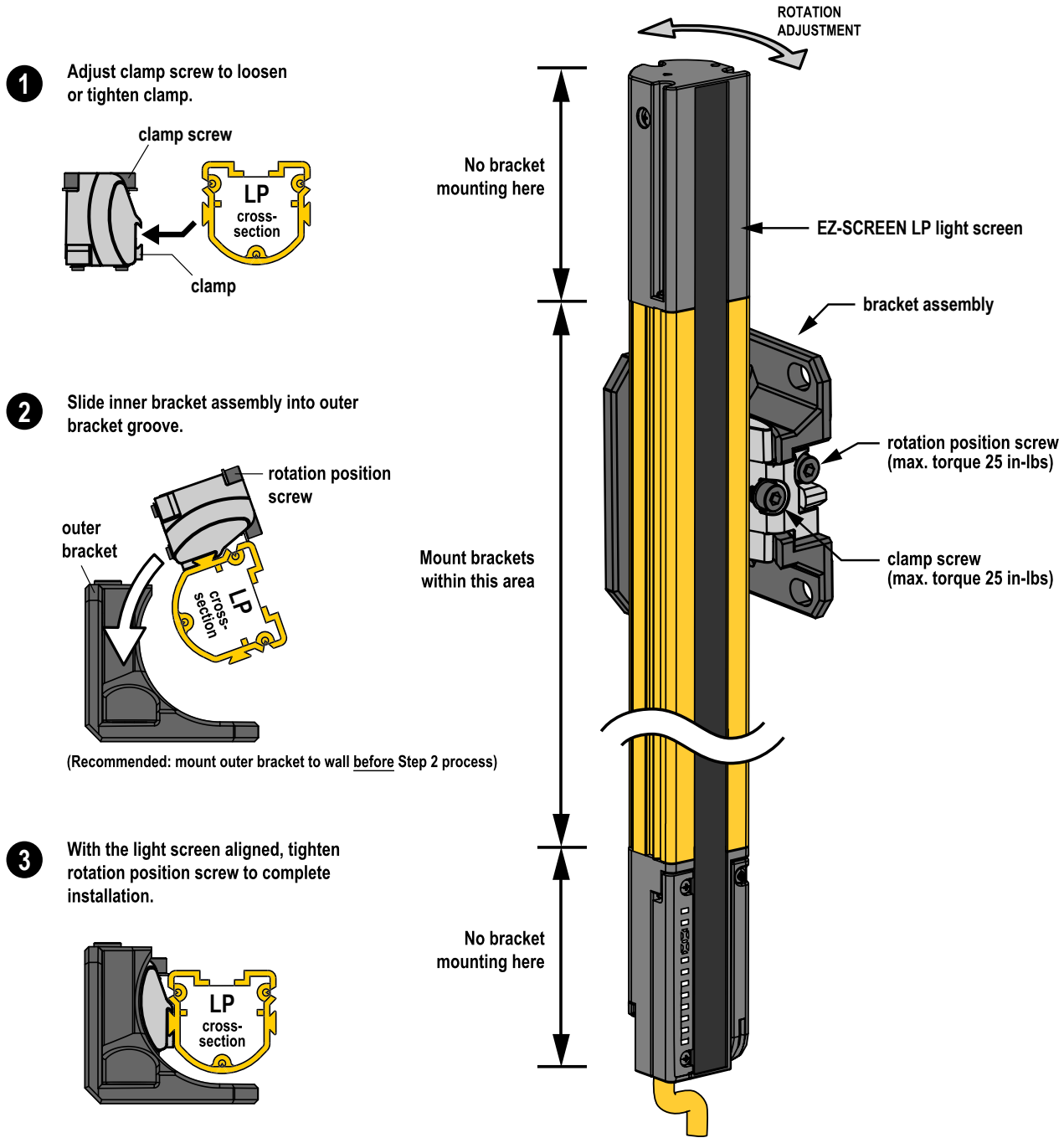


To mount the EZ-SCREEN LP:

1. Position the emitter and receiver windows directly facing each other.
2. Measure from a reference plane, for example, a level building floor, to the same point(s) on the emitter and receiver to verify their mechanical alignment. Use a carpenter's level, a plumb bob, or the optional LAT-1 Laser Alignment Tool (see "Alignment Aids" on page 89) or check the diagonal distances between the sensors, to achieve mechanical alignment. Final alignment procedures are explained in "Initial Checkout Procedure" on page 41.
3. Tighten all fasteners.


© Banner Engineering Corp. All rights reserved.

### 4.3.2 Sensor Mounting and Mechanical Alignment

**Verify that:**

- The emitter and receiver are directly opposite each other
- Nothing is interrupting the defined area
- The defined area is the same distance from a common reference plane for each sensor
- The emitter and receiver are in the same plane and are level/plumb and square to each other (vertical, horizontal, or inclined at the same angle, and not tilted front-to-back or side-to-side)

*Figure 23. Incorrect Sensor Alignment*

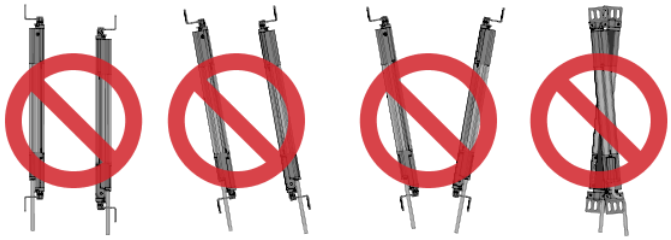

**Angled or Horizontal Installations – verify that:**

- Distance X at the emitter and receiver are equal
- Distance Y at the emitter and receiver are equal
- Distance Z at the emitter and receiver are equal from parallel surfaces
- Vertical face (the window) is level/plumb
- Defined area is square. Check diagonal measurements if possible. See Vertical Installations.

*Figure 24. For angled or horizontal installations*

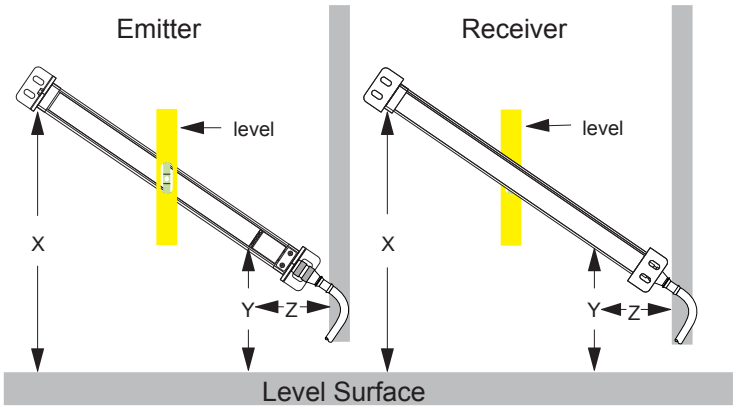


**Vertical Installations – verify that:**

- Distance X at the emitter and receiver are equal
- Both sensors are level/plumb (check both the side and face)
- Defined area is square. Check diagonal measurements if possible (Diagonal A = Diagonal B).


© Banner Engineering Corp. All rights reserved.

*Figure 25. For vertical installations*

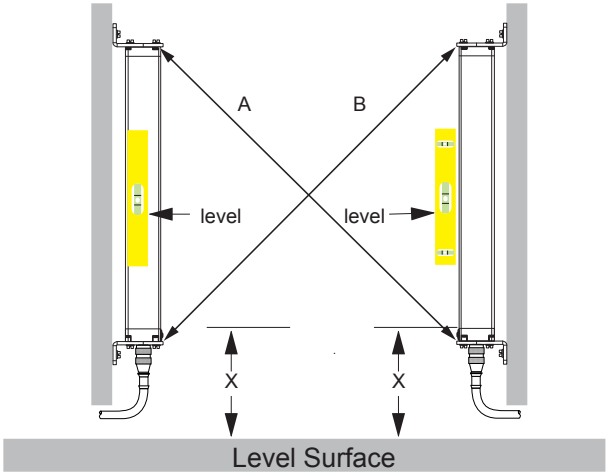


## 4.3.3 Mounting Dimensions and Defined Area

All measurements are listed in millimeters [inches], unless noted otherwise.

*Figure 26. Emitter and receiver mounting dimensions and defined area*

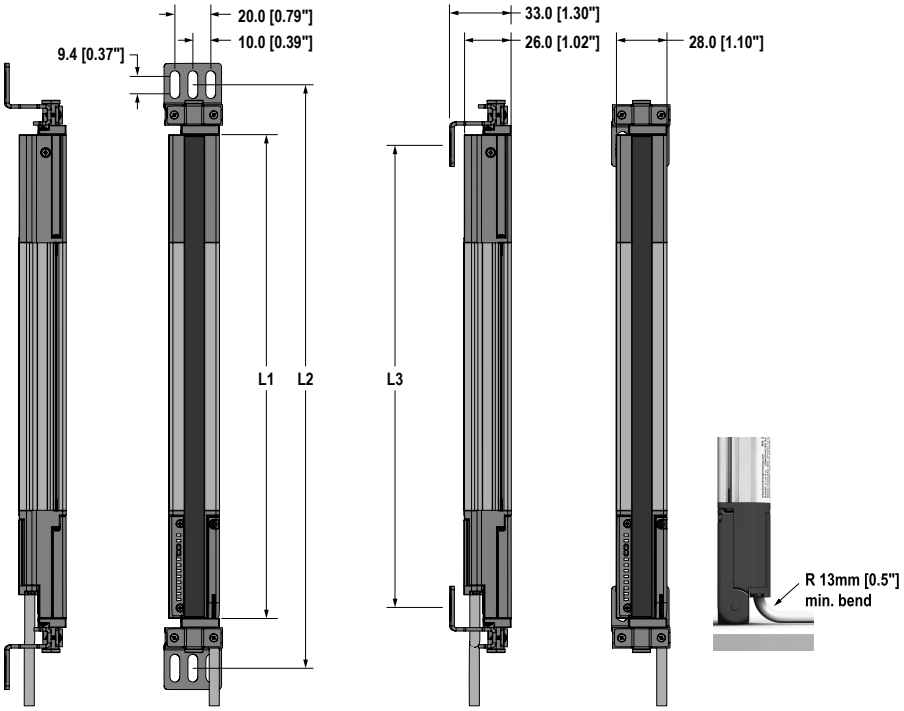


| Emitter / Receiver Model | Housing Length | Distance Between Bracket Holes | | Defined Area[1] |
|---|---|---|---|---|
| | L1 | L2 | L3 | |
| **SLPE..-270..** | 270 mm (10.6 in) | 326 mm (12.8 in) | 258 mm (10.2 in) | 270 mm |
| **SLPE..-410..** | 410 mm (16.1 in) | 465 mm (18.3 in) | 398 mm (15.7 in) | 410 mm |
| **SLPE..-550..** | 549 mm (21.6 in) | 605 mm (23.8 in) | 537 mm (21.1 in) | 550 mm |
| **SLPE..-690..** | 689 mm (27.1 in) | 745 mm (29.3 in) | 677 mm (26.7 in) | 690 mm |
| **SLPE..-830..** | 829 mm (32.6 in) | 885 mm (34.8 in) | 817 mm (32.2 in) | 830 mm |

Continued on page 37

[1] Nominal measurement


© Banner Engineering Corp. All rights reserved.

Continued from page 36

| Emitter / Receiver Model | Housing Length | Distance Between Bracket Holes | | Defined Area |
|---|---|---|---|---|
| | L1 | L2 | L3 | |
| **SLPE..-970..** | 969 mm (38.1 in) | 1024 mm (40.3 in) | 957 mm (37.7 in) | 970 mm |
| **SLPE..-1110..** | 1108 mm (43.6 in) | 1164 mm (45.8 in) | 1096 mm (43.1 in) | 1110 mm |
| **SLPE..-1250..** | 1248 mm (49.1 in) | 1304 mm (51.3 in) | 1236 mm (48.7 in) | 1250 mm |
| **SLPE..-1390..** * | 1388 mm (54.6 in) | 1444 mm (56.9 in) | 1376 mm (54.2 in) | 1390 mm |
| **SLPE..-1530..** * | 1528 mm (60.2 in) | 1583 mm (62.3 in) | 1516 mm (59.7 in) | 1530 mm |
| **SLPE..-1670..** * | 1667 mm (65.6 in) | 1723 mm (67.8 in) | 1655 mm (65.2 in) | 1670 mm |
| **SLPE..-1810..** * | 1807 mm (71.1 in) | 1863 mm (73.3 in) | 1795 mm (70.7 in) | 1810 mm |

* Lengths longer than 1250 mm are no longer available.

*Table 4. Included mounting bracket—dimensions (for emitter or receiver)*

**Optional End-Cap Bracket LPA-MBK-10**



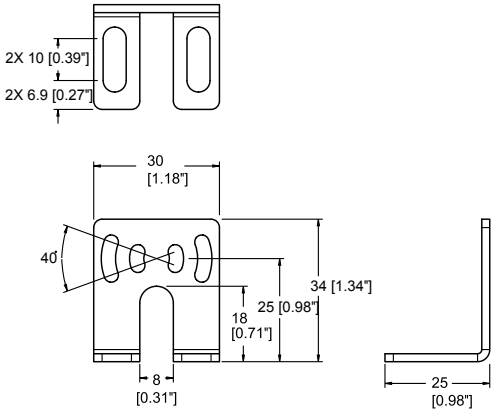


**End-Cap Bracket LPA-MBK-11**



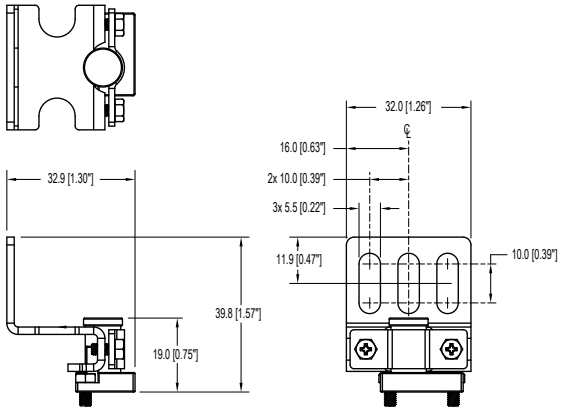


Continued on page 38


© Banner Engineering Corp. All rights reserved.

Continued from page 37

| | |
|---|---|
| **Side-Mount Bracket LPA-MBK-12**<br>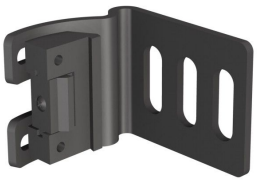 | 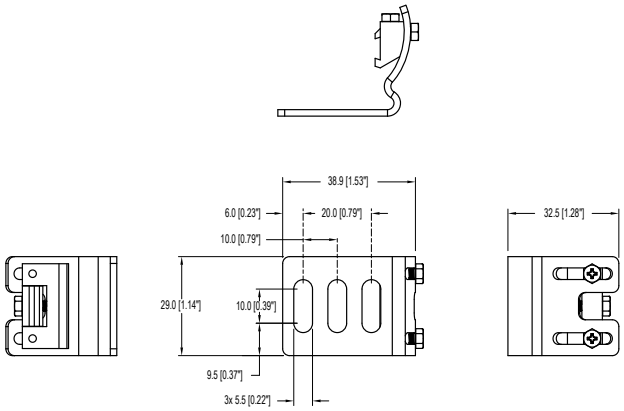 |

*Table 5. Optional mounting bracket—dimensions (for emitter or receiver)*

| | |
|---|---|
| **Side-Mount Bracket LPA-MBK-16**<br><br>(optional) | 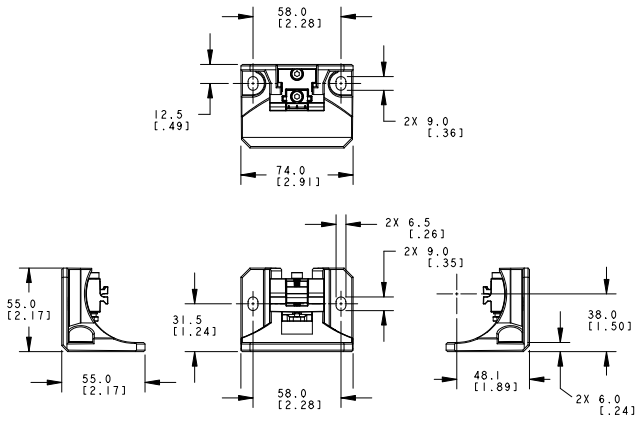 |


© Banner Engineering Corp. All rights reserved.

Chapter Contents

5.1 Routing Cordsets ..... 39
5.2 Initial Electrical Connections ..... 40
5.3 Initial Checkout Procedure ..... 41
5.4 Electrical Connections to the Guarded Machine ..... 48
5.5 Wiring Diagrams ..... 54
5.6 Preparing for System Operation ..... 58

# Chapter 5 Electrical Installation and Testing

Follow these steps to electrically install the EZ-SCREEN LP components and interface with the guarded machine.

**WARNING:**

- **Read this Section Carefully Before Installing the System**
- **Failure to follow these instructions could result in serious injury or death.**
- If all mounting, installation, interfacing, and checkout procedures are not followed properly, this Banner Engineering Corp. device cannot provide the protection for which it was designed.
- The user is responsible for ensuring that all local, state, and national laws, rules, codes, or regulations relating to the installation and use of this control system in any particular application are satisfied. Ensure that all legal requirements have been met and that all technical installation and maintenance instructions contained in this manual are followed.
- The user has the sole responsibility to ensure that this Banner Engineering Corp. device is installed and interfaced to the guarded machine by Qualified Persons, in accordance with this manual and applicable safety regulations. A Qualified person is a person who, by possession of a recognized degree or certificate of professional training, or who, by extensive knowledge, training and experience, has successfully demonstrated the ability to solve problems relating to the subject matter and work.

1. Routing cordsets and making initial electrical connections (see "Routing Cordsets" on page 39 and "Initial Electrical Connections" on page 40.
2. Apply power to each emitter/receiver pair (see "Initial Electrical Connections" on page 40).
3. Perform an Initial Checkout Procedure (see "Initial Checkout Procedure" on page 41).
4. Make all electrical interface connections to the guarded machine (see "Electrical Connections to the Guarded Machine" on page 48).
5. Perform a commissioning checkout procedure (see "Commissioning Checkout" on page 59).

## 5.1 Routing Cordsets

Attach the required cordsets to the sensors, and route the sensor cables to the junction box, electrical panel, or other enclosure in which the interface module, the redundant mechanically linked interposing relays, FSDs, or other safety-related parts of the control system are located.

This must be done per local wiring code for low-voltage DC control cables and may require installation of electrical conduit. See "Cordsets" on page 79 for selection of Banner supplied cables.

**NOTE:** The machine interface cable must connect to the sensor end adjacent to the indicators, in order for the System to operate properly.

EZ-SCREEN LP is designed and manufactured to be highly resistant to electrical noise and to operate reliably in industrial settings. However, extreme electrical noise may cause a random Trip or Latch condition; in extreme cases, a Lockout is possible.

Emitter and receiver wiring is low voltage; routing the sensor wires alongside power wires, motor/servo wires, or other high voltage wiring may inject noise into the EZ-SCREEN LP System. It is good wiring practice, and sometimes may be required by code, to isolate emitter and receiver cables from high-voltage wires, avoid routing cables close to “noisy” wiring, and provide a good connection to earth ground.


© Banner Engineering Corp. All rights reserved.

Sensor cabling and any interconnect wiring should have an insulation temperature rating of at least 90 °C (194 °F).

For SLP....-... sensors:

1. Slide the RD connector firmly into the housing's RD port.

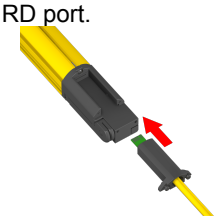

2. Tighten the Phillips screws at the base of the connector to lock into place.

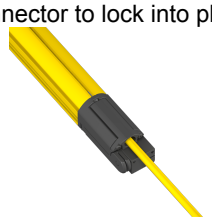

*Table 6. Maximum machine interface cable length versus total load current (OSSDs + Aux)*

| Maximum Machine Interface Cordset Length[1] | | | | | | |
|---|---|---|---|---|---|---|
| EZ-SCREEN LP Receivers in Cascade | Total Load Current (OSSD 1 + OSSD 2 + Aux Out) | | | | | |
| | 0.1 A | 0.25 A | 0.5 A | 0.75 A | 1.0 A | 1.25 A |
| 1 | 78.9 m (259 ft) | 62.5 m (205 ft) | 46.6 m (153 ft) | 37.2 m (122 ft) | 30.8 m (101 ft) | 26.5 m (87 ft) |
| 2 | 43.3 m (142 ft) | 37.8 m (124 ft) | 31.4 m (103 ft) | 26.8 m (88 ft) | 23.5 m (77 ft) | 20.7 m (68 ft) |
| 3 | 29.6 m (97 ft) | 27.1 m (89 ft) | 23.5 m (77 ft) | 20.7 m (68 ft) | 18.6 m (61 ft) | 17.1 m (56 ft) |
| 4 | 22.6 m (74 ft) | 21.0 m (69 ft) | 18.9 m (62 ft) | 17.1 m (56 ft) | 15.5 m (51 ft) | 14.3 m (47 ft) |

**NOTE:** Emitter and receiver power (current) requirements are accounted for. The above values represent additional current draw that must be accounted for.

**NOTE:** Maximum cordset lengths are intended to ensure that adequate power is available to the EZ-SCREEN LP when the supply is operating at +20 V DC. Values in the previous table are worse case. Contact Banner Engineering if there are any questions.

## 5.2 Initial Electrical Connections

**WARNING:**

- **Risk of electric shock**
- Use extreme caution to avoid electrical shock. Serious injury or death could result.
- Always disconnect power from the safety system (for example, device, module, interfacing, etc.), guarded machine, and/or the machine being controlled before making any connections or replacing any component. Lockout/tagout procedures might be required. Refer to OSHA 29CFR1910.147, ANSI Z244-1, or the applicable standard for controlling hazardous energy.
- Make no more connections to the device or system than are described in this manual. Electrical installation and wiring must be made by a Qualified Person[2] and must comply with the applicable electrical standards and wiring codes, such as the NEC (National Electrical Code), NFPA 79, or IEC 60204-1, and all applicable local standards and codes.

[1] RDLP-8..D or QDE-8..D model cordsets; may require multiple cables. See "Determining Interconnect Cordset Lengths" on page 94 for cascade installations.
[2] A person who, by possession of a recognized degree or certificate of professional training, or who, by extensive knowledge, training and experience, has successfully demonstrated the ability to solve problems relating to the subject matter and work.


© Banner Engineering Corp. All rights reserved.

Following relevant electrical standards and wiring codes, such as the NEC, NFPA79 or IEC60204-1, always connect the earth ground (green/yellow wire). **Do not operate the EZ-SCREEN LP without an earth ground connection.**

Make the electrical connections in the order described in this section. Do not remove end-caps; no internal connections are to be made. All connections are made through the RD or pigtail QD connections.

**Emitter Cordset**

EZ-SCREEN LP emitters have an 8-pin cordset, but not all conductors are used. The other wires are in place to allow a parallel connection (color-for-color) to the receiver cable, providing sensor interchangeability (or “swapability”); either sensor may be installed at either cordset connection. In addition to providing similar cabling, this wiring scheme is advantageous during installation, wiring, and troubleshooting.

**Receiver Cordset**

**Do not connect any wires to the machine control circuits (OSSD outputs) at this time.** For the initial power-up and checkout, NO EDM must be configured. Locate the orange and orange/black wires (pins 2 and 3) and temporarily connect the ends of the wires to each other (but not to the machine at this time). Take precautions to prevent the wires from shorting to ground or to other sources of energy (for example, terminate with a wire-nut). Final EDM wiring must be completed later.
If used, connect the external reset switch to the reset wire (violet) on the receiver cable and to 24 V DC (see "Wiring Diagrams" on page 54). See the warning about the physical location of the reset switch. The reset switch must be a normally open switch that is held closed for approximately 0.25 second, but no longer than 2 seconds, and then re-opened to accomplish the reset. The switch must be capable of switching 10 to 30 V DC at 30 mA.

# 5.3 Initial Checkout Procedure

The initial checkout procedure must be performed by a Qualified Person. It must be performed only after configuring the System and after connecting the components.

Perform this procedure to:

- Ensure proper installation when the System is first installed
- Ensure proper System function whenever any maintenance or modification is performed on the System or on the machinery that is guarded by the System.

## 5.3.1 Configuring the System for Initial Checkout

Verify that the emitter and receiver are both set to the factory defaults for initial checkout and optical alignment. Receiver factory defaults are for trip output, 2-channel EDM, reduced resolution Off, aux output, inverted display Off, and scan code 1. Emitter factory defaults are for reset, fault output Off, inverted display Off, and scan code 1.

For the initial checkout, the EZ-SCREEN LP System must be checked without power available to the guarded machine. Final interface connections to the guarded machine cannot take place until the light screen system has been checked out. This may require lockout/tagout procedures (refer to OSHA1910.147, ANSI Z244-1, ISO 14118, or the appropriate standard for controlling hazardous energy). The OSSD connections will be made after the initial checkout procedure has been successfully completed.

Verify that:

- Power has been removed from (or is not available to) the guarded machine and its controls or actuators
- The machine control circuit or the Safety/Interface Module is not connected to the OSSD outputs at this time (permanent connections will be made later)
- EDM is configured for *no monitoring*, see "External Device Monitoring" on page 50

## 5.3.2 Initial Power-Up

1. Inspect the area near the light screen for reflective surfaces, including work pieces and the guarded machine. Reflective surfaces may cause light beams to reflect around a person in the light screen, preventing the person from being detected and not stopping the machine motion (see "Adjacent Reflective Surfaces" on page 25).
2. Eliminate the reflective surfaces as much possible by relocating, painting, masking, or roughening them. Remaining problem reflections will become apparent during the trip test.
3. Verify that power is removed from the EZ-SCREEN LP System and from the guarded machine and that the OSSD safety outputs are not connected.
4. Remove all obstructions from the light screen.
5. Leaving power to the guarded machine Off, make power and earth ground connections on both the emitter and receiver cables (see "Emitter Wiring Options" on page 54).
6. Power up the EZ-SCREEN LP System only.


© Banner Engineering Corp. All rights reserved.

7. Verify that the input power is present to both the emitter and the receiver. At least one indicator on both the emitter and the receiver should be On and the start-up sequence should cycle.
8. Watch both the emitter and the receiver Status indicators, 7-segment displays, and the receiver Zone indicators to determine the light screen alignment status.
   - **Lockout Condition**—the emitter Status indicator is single-flashing Red; the receiver Status indicator is On Red, and the 7-segment display reads **CH1**. Proceed to "Troubleshooting" on page 71 for diagnostic information.
   - **Receiver Lockout Condition** —the receiver Status indicator is single-flashing Red, with Zone and Reset indicators Off. Go to "Troubleshooting" on page 71 for diagnostic information.
   - **Normal Operating Mode** (emitter)—The Status indicator is On Green.
   - **Receiver Latch Condition, all optical beams clear**—the receiver Status indicator is On Red and the Reset indicator double-flashing Yellow; Zone indicators On Green. When the receiver is configured for Latch Output, the outputs are On only when all beams are clear and after a manual reset. If a reset routine can cause a Clear (Run) condition, optimize the alignment as described in the following section. If a Clear (Run) condition cannot be achieved, see “Blocked condition” below.
   - **Clear (Run) Condition** (receiver)—The Status indicator is On Green (or flashing Green if reduced resolution is enabled), and the Reset indicator is On Yellow. All Zone indicators are On Green.
   - **A Blocked Condition** (receiver)—The Status indicator is On Red, the yellow Reset indicator is On, one or more Zone indicator(s) are On Red, identifying the location of the blocked beams, and the number of blocked beams is displayed. Proceed to "Optical Alignment" on page 42.

**NOTE:** If beam 1 is blocked, Zone indicator 1 is Red and all others are Off. Beam 1 provides the synchronization signal.

**NOTE:** If the emitter Test input is open, the receiver’s 7-segment Display will indicate the total number of beams in the system (minus one) and all Zone indicators will be Red (except for 14-beam systems, where Zone 1 indicator will be Green).

See "Status Indicators" on page 65 for indicator and display information.

### 5.3.3 Optical Alignment

**CAUTION: Ensure that no individuals are exposed to any hazard** if the OSSD outputs turn on when the emitter and receiver become aligned.

Follow these steps to:

Verify the sensor mounting.
Verify the optimal alignment, adjusting the sensor rotation with the power On.

1. Verify that the emitter and the receiver are pointed squarely at each other. Use a straight edge (for example, a level) to determine the direction the sensor is facing. The sensor face must be perpendicular to the optical axis.

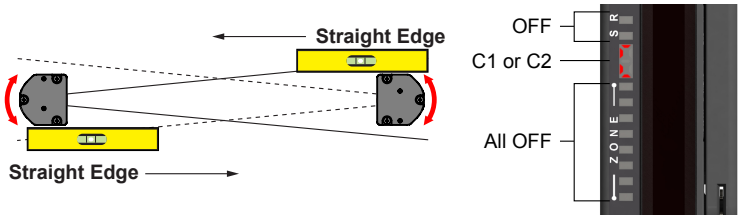


2. If the Channel #1 beam is not aligned, the Status and Zone 1 indicators are Red, the Reset indicator is yellow, and the 7-segment display sequentially indicates **CH1**. Zone indicators 2–8 are Off.

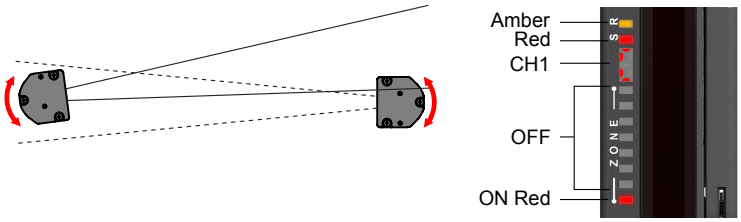



© Banner Engineering Corp. All rights reserved.

3. If the Green Status and Yellow Reset indicators are On, go to the next step. If not, rotate each sensor (one at a time) left and right until the Green Status indicator is On. (As the sensor rotates out of alignment, the Red Status indicator turns On). As more beams are aligned, the Zone indicators turn from Red to Green and the number of blocked beam indicators decreases.

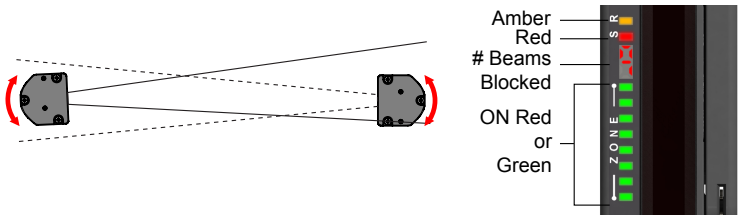


**NOTE:** If the emitter Test input is open, the Diagnostic Display will indicate the total number of beams in the system (minus one) and all Zone indicators will be Red (except for 14-beam systems, where Zone 1 indicator is Green).

4. Optimize alignment and maximize excess gain.

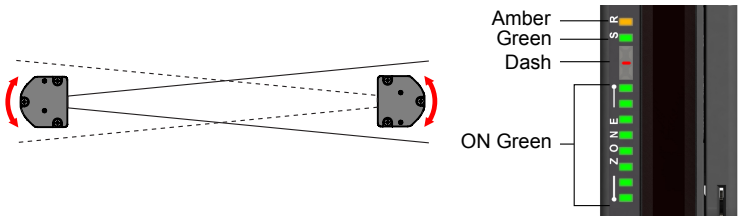


   a. Slightly loosen the sensor mounting screws.
   b. Rotate one sensor left and right, noting the positions in each arc where the Status indicators turn Red (Blocked condition); repeat with the other sensor.
   c. Center each sensor between those two positions.
   d. Tighten the mounting screws, making sure to maintain the positioning as the screws are tightened.
5. For situations where alignment is difficult, a LAT-1-LP Laser Alignment Tool can be used to assist or confirm alignment by providing a visible red dot along the sensor's optical axis.

**NOTE:** If at any time the Red Status indicator begins to flash steadily, the System has entered a Lockout condition. See "Troubleshooting" on page 71 for further information.

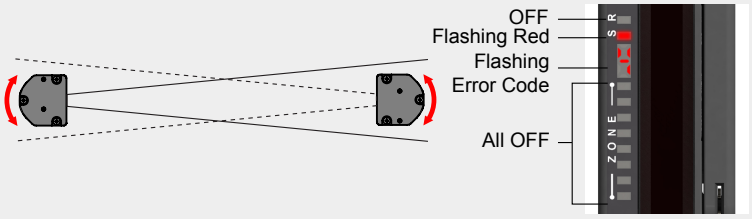


## 5.3.4 Optical Alignment Procedure with Mirrors

EZ-SCREEN LP sensors may be used with one or more corner mirrors for guarding more than one side of an area. The SSM rear-surface glass mirrors are rated at 85% efficiency. Thus, excess gain and sensing range are reduced when using mirrors; see "Use of Corner Mirrors" on page 26.

During any adjustments, allow only one individual to adjust any one item at any one time. In addition to the standard optical alignment procedure, verify:

1. The emitter, receiver, and all mirrors are level and plumb.
2. The middle of the defined area and the center point of the mirrors are approximately the same distance from a common reference point, such as the same height above a level floor.
3. There are equal amounts of mirror surface above and below the defined area such that the optical beams are not passing below or above the mirror.


© Banner Engineering Corp. All rights reserved.

**NOTE:** An LAT-1 Laser Alignment Tool is very helpful by providing a visible red dot along the optical axis. See "Alignment Aids" on page 89, "Figure: Optical alignment using the LAT-1" on page 44, and Banner Safety Applications Note SA104 (p/n 57477) for more information.

*Figure 27. Optical alignment using the LAT-1*

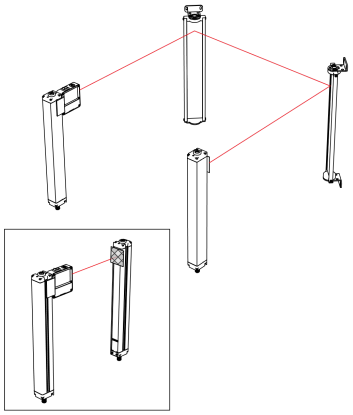

*Figure 28. Corner Mirror Alignment*

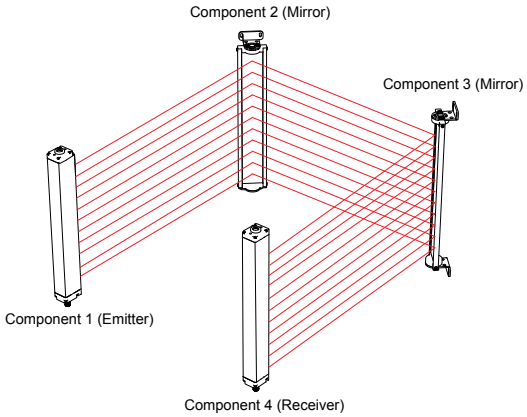


## 5.3.5 Reduced Resolution (Floating Blanking)

Reduced Resolution increases the minimum diameter of an object that the light screen can reliably detect anywhere within its defined area. This allows objects of a certain maximum size to interrupt the defined area without causing a Trip condition (that is, the OSSDs turn Off).

Use Reduced Resolution only when necessary. In reduced-resolution applications, the safety (minimum) distance always increases due to the larger depth penetration factor (Dpf). In either case, see "Calculating the Safety Distance (Minimum Distance)" on page 19 to determine safety distance.

*Figure 29. Reduced Resolution*

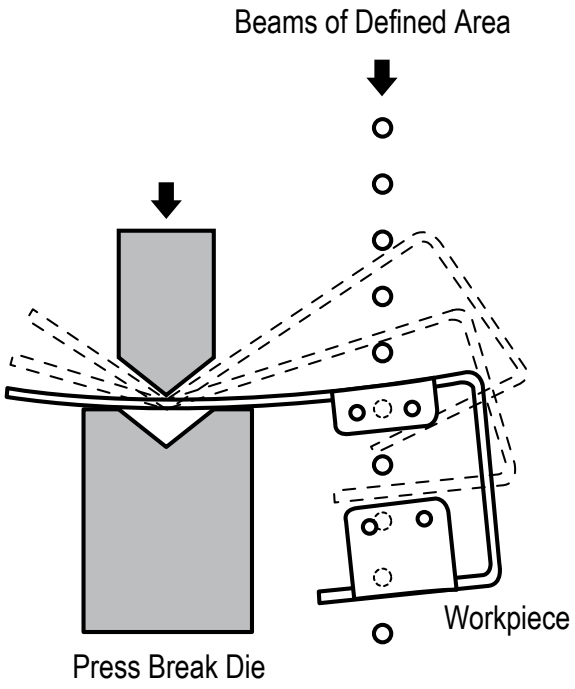


With 2-beam reduced resolution enabled, any two consecutive beams (except for the sync beam), can be blocked without causing a stop condition. Thus, multiple "holes" are created in which 14 mm systems will detect a 34 mm object and ignore a 16 mm object. Similarly, 25 mm sensors will detect a 65 mm object and ignore a 36 mm object. See "Figure: Accessing the


© Banner Engineering Corp. All rights reserved.

configuration switches" on page 62 for DIP-switch configuration. During operation, the green Status indicator flashes when reduced resolution is enabled.

**WARNING:**
- **Use reduced resolution and fixed blanking only when necessary**
- Failure to follow these instructions could result in serious injury or death.
- Completely fill any holes created in the sensing field with the blanked object or increase the safety (minimum) distance to account for the larger resolution.

| Model | Reduced Resolution Setting | Maximum Size of Undetected Objects | Resulting Resolution |
|---|---|---|---|
| 14 mm Resolution | Off | (Not Applicable) | 14 mm (0.55 in) |
| | On (2-beam) | 16 mm (0.63 in) | 34 mm (1.34 in) |
| 25 mm Resolution | Off | (Not Applicable) | 25 mm (0.98 in) |
| | On (2-beam) | 36 mm (1.42 in) | 65 mm (2.56 in) |

## 5.3.6 Fixed Blanking

Fixed blanking disables beams that would otherwise be continually blocked by a stationary object, such as tooling.

One or multiple areas within an EZ-SCREEN LP sensor pair may be “blanked out,” with a minimum of one beam between two blanked areas. Any beam other than the sync beam may be blanked. All beams of a fixed blanked area must remain blocked during operation for the OSSDs to stay ON.

A flashing green Zone indicator denotes the location of a blanked area. If the object is either moved or removed, the System goes into Lockout mode, ensuring that an unexpected hole in the sensing field is not created.

For cascade models (either when used alone, or as the last receiver in a cascade), fixed blanking may be configured remotely. This feature is useful when the light screen is in a difficult-to-access location, or when the fixed blanked area changes frequently.

### Configure Fixed Blanking

1. From either normal operation or a power-off condition, set the first and second DIP switches (T/L and Red Res) both to the left (Trip operation and Reduced Resolution enabled positions). See "System Operation" on page 61.
2. Set the third and fourth DIP switches (the second T/L and Red Res) both to the right (Latch operation and Reduced Resolution Off positions). The receiver should now either be in a lockout condition or the power is still OFF.

*Figure 30. DIP switch configuration to teach fixed blanking*




1. **With Power On:** Position object(s) in the defined area.
2. Set T/L and Red Res switches as shown (do not change SC2/SC1 or E1/E2 switch positions).
3. Press the Reset button or cycle power.
4. Reconfigure DIP switches for normal operation.
5. Press the Reset button or cycle power.

3. If power is Off: Apply power.
   In a lockout condition: Perform a valid reset sequence (close the reset switch for 0.25 to 2 seconds, then reopen it).
4. Observe the Fixed Blanking configuration, which is indicated by:
   - Display sequentially displays “PFA” (program fixed blanking active) and the number of blocked beams (“0” if all beams are clear).
   - Zone indicators active
   - Reset indicator Off
   - Status indicator On Red


© Banner Engineering Corp. All rights reserved.

5. Position the object(s) to be blanked (or remove the objects that will no longer be blanked).

> **NOTE:** When any beams are blocked, the 7-segment display sequentially displays “PFA” and the number of blocked beams. The zone indicators remain active and denote the location of blocked beams.

6. To teach the blanked beams, re-configure DIP switches for normal operation (see "System Operation" on page 61).
7. Verify that only the objects to be blanked are interrupting the defined area. A lockout will occur if an object is moved or removed after teaching.
   The receiver indicates:
   - Display: sequentially displays “PFC” (PFC = Program Fixed Blanking Complete)
   - Zone indicators flash approximate location of fixed blanked area programmed
   - Reset indicator single-flashing Yellow
   - Status indicator single-flashing Red
8. Perform a valid reset sequence (see Step 3) or cycle power.
9. To disable fixed blanking, follow this same procedure, but remove all objects not to be blanked at Step 5.

### 5.3.7 Perform a Trip Test

Perform a trip test to verify the detection capability of the system.

After optimizing the optical alignment and configuring fixed blanking and/or reduced resolution (if applicable), perform the trip test to verify the detection capability of the EZ-SCREEN LP System.

This test also verifies correct sensor orientation, identifies optical short circuits, and verifies the expected resolution for applications using reduced resolution. After the installation has passed the trip test, the safety outputs may be connected and the commissioning checkout may be performed (initial installations only).

> **NOTE:** Cascaded systems—To test a cascaded system, test each light screen individually, while monitoring the status indicator on the first (master) receiver in the cascade.

1. Select the proper test piece supplied with the receiver.

*Table 7. Appropriate Test Pieces for Trip Test*

| Reduced Resolution | 14 mm Resolution Models | 25 mm Resolution Models |
|---|---|---|
| Off | 14 mm (0.55 in) dia. Model STP-13 | 25 mm (0.98 in) dia. Model STP-16 |
| On (2-beam) | 34 mm (1.34 in) dia. Model STP-17 | 65 mm (2.56 in) dia. Model STP-18 |

2. Verify that the System is in Run mode, the Green Status indicator is On (or flashing if reduced resolution is enabled), all Zone indicators are green, and the amber Status indicator is On. A manual reset may be required in Latch mode.
3. Pass the specified test piece through the defined area in three paths: near the emitter, near the receiver, and midway between the emitter and receiver.


© Banner Engineering Corp. All rights reserved.

*Figure 31. Trip Test*

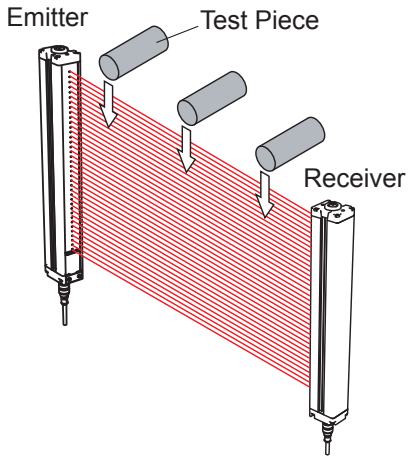


4. During each pass, while the test piece is interrupting the defined area, **at least one Zone indicator must be Red. The Red Zone indicator must change with the position of the test piece within the defined area.**
   - Trip Output Operation: The Status indicator must turn red and remain red for as long as the test piece remains in the defined area. If not, the installation has failed the trip test.
   - Latch Output Operation: The Status indicator must turn red and remain red. The amber Reset indicator must remain ON steady. If the Reset indicator begins to flash at any time while the test piece is interrupting the defined area, the installation has failed the trip test.

   If all Zone indicators turn green or fail to follow the position of the test piece while it is within the defined area, the installation has failed the trip test. Check for correct sensor orientation , reflective surfaces, and unguarded areas created due to the use of Blanking. Do not continue until the situation is corrected.

   When the test piece is removed from the defined area, in trip output operation, the green Status indicator must turn on (or flash green, if reduced resolution is enabled). In latch output operation, the Status indicator will remain red until a manual reset is performed (the amber Reset indicator will be flashing).

   **WARNING:**
   - **Trip test failure**
   - Using a system that has failed a trip test can result in serious bodily injury or death. If the trip test has failed, the system might not stop dangerous machine motion when a person or object enters the sensing field.
   - Do not attempt to use the system if the system does not respond properly to the trip test.

5. If mirrors are used in the application: Test the defined area on each leg of the sensing path (for example, emitter to mirror, between mirror and receiver).

   *Figure 32. Trip Test with Corner Mirror*

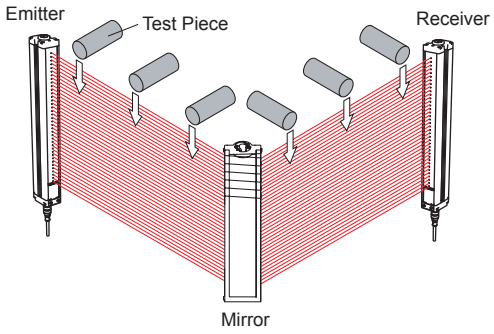


6. If the EZ-SCREEN LP System passes all checks during the trip test, go on to "Electrical Connections to the Guarded Machine" on page 48.


© Banner Engineering Corp. All rights reserved.

# 5.4 Electrical Connections to the Guarded Machine

Verify that power has been removed from the EZ-SCREEN LP and the guarded machine. Make the permanent electrical connections as described in "Output Signal Switching Device (OSSD) Output Connections" on page 48 and "Final Switching Devices (FSD) Interfacing Connections" on page 49 as required by each individual application.

Lockout/tagout procedures may be required (refer to OSHA 1910.147, ANSI Z244-1, ISO 14118, or the appropriate standard for controlling hazardous energy). Follow relevant electrical standards and wiring codes, such as the NEC, NFPA79 or IEC 60204-1.

Supply power and external device monitoring (EDM) should already be connected. The EZ-SCREEN LP must also have been aligned and passed the Initial Checkout, as described in "Initial Checkout Procedure" on page 41.

The final connections to be made or verified are:

- OSSD outputs (see "Output Signal Switching Device (OSSD) Output Connections" on page 48)
- FSD interfacing (see "Final Switching Devices (FSD) Interfacing Connections" on page 49)
- MPCE/EDM (see "Machine Primary Control Elements and EDM Input" on page 50)
- Remote Test

**WARNING:**

- **Risk of electric shock**
- Use extreme caution to avoid electrical shock. Serious injury or death could result.
- Always disconnect power from the safety system (for example, device, module, interfacing, etc.), guarded machine, and/or the machine being controlled before making any connections or replacing any component. Lockout/tagout procedures might be required. Refer to OSHA 29CFR1910.147, ANSI Z244-1, or the applicable standard for controlling hazardous energy.
- Make no more connections to the device or system than are described in this manual. Electrical installation and wiring must be made by a Qualified Person[1] and must comply with the applicable electrical standards and wiring codes, such as the NEC (National Electrical Code), NFPA 79, or IEC 60204-1, and all applicable local standards and codes.

## 5.4.1 Output Signal Switching Device (OSSD) Output Connections

Both the Output Signal Switching Device (OSSD) outputs must be connected to the machine control so that the machine's safety-related control system interrupts the circuit or power to the Machine Primary Control Element(s) (MPCE), resulting in a non-hazardous condition.

Final Switching Devices (FSDs) typically accomplish this when the OSSDs go to an OFF state.

Refer to the output specifications in the "Specifications" on page 17 and these warnings before making OSSD output connections and interfacing the EZ-SCREEN LP to the machine.

**WARNING:**

- **Interfacing both output signal switching devices (OSSD)**
- Failure to follow these instructions could result in serious injury or death.
- Unless the same degree of safety is maintained, never wire an intermediate device(s) (PLC, PES, PC) between the safety module outputs and the master stop control element it switches such that a failure causes a loss of the safety stop command or the failure allows the safety function to be suspended, overridden, or defeated.
- Connect both OSSD outputs to the machine control so that the machine’s safety-related control system interrupts the circuit to the machine primary control element(s), resulting in a non-hazardous condition.

[1] A person who, by possession of a recognized degree or certificate of professional training, or who, by extensive knowledge, training and experience, has successfully demonstrated the ability to solve problems relating to the subject matter and work.


© Banner Engineering Corp. All rights reserved.

**WARNING:**

- **OSSD Interfacing**
- Failure to properly interface the OSSD Outputs to the guarded machine could result in serious injury or death.
- To ensure proper operation, the Banner device output parameters and machine input parameters must be considered when interfacing the Banner device OSSD outputs to machine inputs. Design machine control circuitry so that all of the following are true:

  The maximum load resistance value is not exceeded.
  The maximum specified OSSD OFF-state voltage does not result in an ON condition.

## 5.4.2 Final Switching Devices (FSD) Interfacing Connections

Final switching devices (FSDs) take many forms. The most common are forced-guided devices, mechanically linked relays, or interface modules. The mechanical linkage between the contacts allows the device to be monitored by the external device monitoring (EDM) circuit for certain failures.

Depending on the application, the use of FSDs can facilitate controlling voltage and current that differs from the OSSD outputs of the EZ-SCREEN LP. FSDs can also be used to control an additional number of hazards by creating multiple safety stop circuits.

### Protective Stop (Safety Stop) Circuits

A protective stop (safety stop) allows for an orderly cessation of motion for safeguarding purposes, which results in a stop of motion and removal of power from the MPCEs (assuming this does not create additional hazards).

A protective stop circuit typically comprises a minimum of two normally open contacts from forced-guided, mechanically linked relays, which are monitored through External Device Monitoring (EDM) to detect certain failures to prevent the loss of the safety function. Such a circuit can be described as a "safe switching point". Typically, protective stop circuits are either single-channel, which is a series connection of at least two normally open contacts; or dual-channel, which is a separate connection of two normally open contacts. In either method, the safety function relies on the use of redundant contacts to control a single hazard. If one contact fails On, the second contact arrests the hazards and prevents the next cycle from occurring. See "Generic Receiver Wiring—FSDs (Manual Reset)" on page 55.

The interfacing of the protective stop circuits must be accomplished so that the safety function cannot be suspended, overridden, or defeated unless accomplished in a manner of the same or greater degree of safety as the machine’s safety-related control system that includes the EZ-SCREEN LP.

The normally open safety outputs from an interface module provide a series connection of redundant contacts that form protective stop circuits for use in either single-channel or dual-channel control. See "Generic Receiver Wiring—FSDs (Manual Reset)" on page 55.

### Dual-Channel Control

Dual-channel control provides the ability to electrically extend the safe switching point beyond the FSD contacts.

With proper monitoring, this method of interfacing is capable of detecting certain failures in the control wiring between the safety stop circuit and the MPCEs. These failures include a short-circuit of one channel to a secondary source of energy or voltage, or a loss of the switching ability of one of the FSD outputs. Such failures may lead to a loss of redundancy, or to a complete loss of safety, if not detected and corrected.

The possibility of a failure to the wiring increases as the physical distance between the FSD safety stop circuits and the MPCEs increases, as the length or the routing of the interconnecting wires increases, or if the FSD safety stop circuits and the MPCEs are located in different enclosures. For this reason, dual-channel control with EDM monitoring should be used in any installation where the FSDs are located remotely from the MPCEs.

### Single-Channel Control

Single-channel control uses a series connection of FSD contacts to form a safe switching point.

After this point in the machine’s safety-related control system, failures can occur that would result in a loss of the safety function (such as a short-circuit to a secondary source of energy or voltage). For this reason, single-channel control interfacing should be used only in installations where FSD safety stop circuits and the MPCEs are mounted within the same control panel, adjacent to each other, and are directly connected to each other; or where the possibility of such a failure can be excluded. If this cannot be achieved, then dual-channel control should be used.

Methods to exclude the possibility of these failures include, but are not limited to:

- Physically separating interconnecting control wires from each other and from secondary sources of power
- Routing interconnecting control wires in separate conduit, runs, or channels


© Banner Engineering Corp. All rights reserved.

- Locating all elements (modules, switches, and devices under control) within one control panel, adjacent to each other, and directly connected with short wires
- Properly installing multi-conductor cabling and multiple wires through strain relief fittings. Over-tightening of a strain-relief device can cause short circuits at that point.
- Using positive-opening or direct-drive components, installed and mounted in a positive mode

### 5.4.3 Machine Primary Control Elements and EDM Input

A machine primary control element (MPCE) is an electrically powered element that directly controls the normal operation of a machine in such a way that it is the last element (in time) to function when machine operation is to be initiated or arrested (per IEC 61496-1). Examples include motor contactors, clutch/brakes, valves, and solenoids.

To ensure that an accumulation of failures does not compromise the redundant control scheme (cause a failure to danger), a method to verify the normal functioning of MPCEs or other control devices is required. EZ-SCREEN LP provides a convenient method for this verification: external device monitoring (EDM).

For the EZ-SCREEN LP external device monitoring to function properly, each device must include a normally closed, forced-guided (mechanically linked) contact that can accurately reflect the status of the device. This ensures that the normally open contacts, used for controlling hazardous motion, have a positive relationship with the normally closed monitoring contacts and can detect a failure to danger (for example, contacts that are welded closed or stuck On).

It is strongly recommended that a normally closed, forced-guided monitoring contact of each FSD and MPCE be connected to the EDM input (see "Generic Receiver Wiring—FSDs (Manual Reset)" on page 55). If this is done, proper operation will be verified. Monitoring FSD and MPCE contacts is one method of maintaining control reliability (OSHA/ANSI) and Category 3 and 4 (ISO 13849-1).

If monitoring contacts are not available or do not meet the design requirement of being forced-guided (mechanically linked), it is recommended you:

- Replace the devices so that they are capable of being monitored; or
- Incorporate the EDM function into the circuit as close to the MPCE as possible (for example, monitor the FSDs); and
- Employ the use of well-tried, tested, and robust components, and generally accepted safety principles, including fault exclusion, into the design and installation to either eliminate, or reduce to an acceptable (minimal) level of risk, the possibility of undetected faults or failures that can result in the loss of the safety function.

The principle of fault exclusion allows the designer to design out the possibility of various failures and justify it through the risk assessment process to meet the required level of safety performance, such as the requirements of Category 2, 3, or 4. See ISO 13849-1/-2 for further information.

**WARNING:**

- **External Device Monitoring (EDM)**
- Creating a hazardous situation could result in serious injury or death.
- If the system is configured for “no monitoring,” it is the user’s responsibility to ensure this does not create a hazardous situation.

### 5.4.4 External Device Monitoring

EZ-SCREEN LP Low-Profile Safety Light Curtain provides three possible EDM configurations: 1-channel monitoring, 2-channel monitoring, and no monitoring. Their functions are described below.

The most common form of EDM is 1-channel monitoring; its primary advantages are the simplicity of wiring and the ability to use the Auxiliary output. The installation must prevent short circuits across the N.C. monitoring contacts and to secondary sources of power.

Two-channel monitoring can detect additional failures, such as short circuits, and should be used when those failures cannot be designed out or reasonably be excluded. Two-channel monitoring is also the default setting and has the advantage of additional diagnostic capability that can identify which specific element that has slowed or failed.


© Banner Engineering Corp. All rights reserved.

*Figure 33. One-channel EDM status, with respect to safety output*

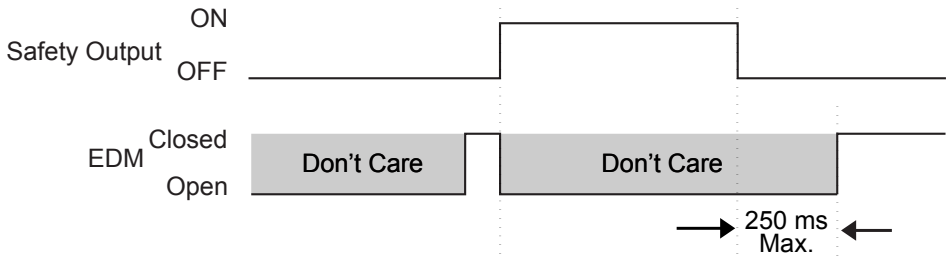


*Figure 34. Two-channel EDM, timing between channels*

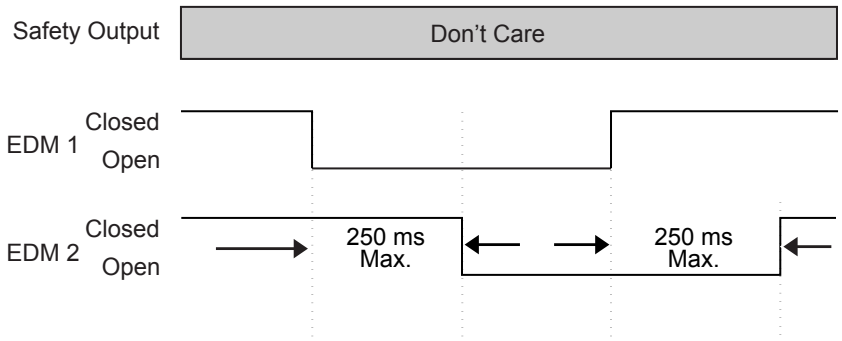


*Figure 35. Two-channel EDM status, with respect to safety output*

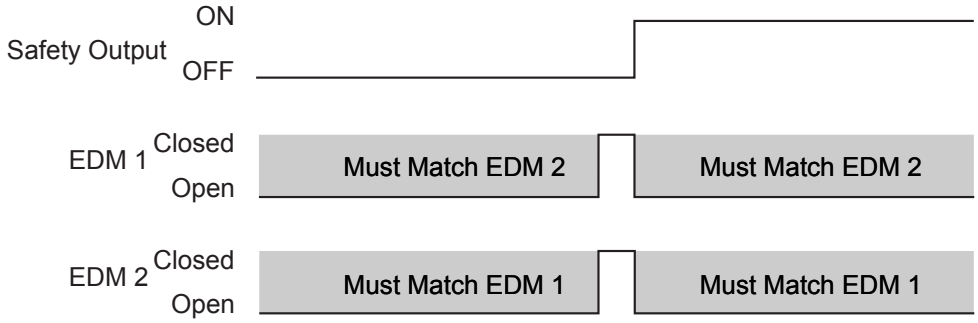


## 5.4.5 External Device Monitoring Wiring

If not connected previously, it is again strongly recommended that one normally closed, forced-guided monitoring contact of each FSD and MPCE be wired as shown in the monitoring circuit (see "Generic Receiver Wiring—FSDs (Manual Reset)" on page 55 and "Generic Receiver Wiring—Interface Module" on page 56 ). Pin 2 and 3 of the receiver connector provides connection for the external device monitoring input.

External device monitoring (EDM) must be wired in one of three configurations described below and this wiring configuration must agree with the receiver's EDM DIP switch settings (see "System Configuration Settings" on page 61).

**One-Channel Monitoring:** This is a series connection of closed monitor contacts that are forced-guided (mechanically linked) from each device controlled by the EZ-SCREEN LP. The monitor contacts must be closed before the EZ-SCREEN LP can be reset and the OSSDs can turn On. After a reset is executed and the safety outputs (OSSDs) turn On, the status of the monitor contacts are no longer monitored and may change state. However, the monitor contacts must be closed within 250 milliseconds of the OSSD outputs going from On to Off.


© Banner Engineering Corp. All rights reserved.

Refer to "Generic Receiver Wiring—FSDs (Manual Reset)" on page 55 and "Generic Receiver Wiring—Interface Module" on page 56 for wiring. Connect the monitor contacts between +24 V DC and EDM1 (pin 3). Leave EDM2 (pin 2) open (no connection), unless using the Auxiliary Output feature ( "Output Signal Switching Device (OSSD) Output Connections" on page 48). Set the configuration DIP switch to the 1-channel EDM position, according to "System Configuration Settings" on page 61.

**Two-Channel Monitoring:** This is an independent connection of closed monitor contacts that are forced-guided (mechanically linked) from each device controlled by the EZ-SCREEN LP. The monitor contacts must be closed before the EZ-SCREEN LP can be reset and the OSSDs can turn On. Regardless of the state of the OSSDs, the monitor contacts may change state (either both open, or both closed). If the monitor contacts remain in opposite states for more than 250 milliseconds, a lockout occurs.

Refer to "Generic Receiver Wiring—FSDs (Manual Reset)" on page 55, "Figure: Generic wiring for an interface module (2-Channel EDM, Manual Reset)" on page 57, and "Figure: Generic wiring for an interface module (1-Channel EDM, Manual Reset) " on page 58 for 2-channel EDM hookup. Connect the monitor contacts as shown between +24 V dc and EDM1 (pin 3) and between +24 V dc and EDM2 (pin 2). Set the configuration DIP switch to the 2-channel EDM position, according to "System Configuration Settings" on page 61.

**No Monitoring:** Use this configuration to perform the initial checkout; see "Initial Checkout Procedure" on page 41. *If the application does not require the EDM function, it is the user's responsibility to ensure that this configuration does not create a hazardous situation.*

Refer to "Generic Receiver Wiring—Self-checking Safety Module, Safety Controller, Safety PLC" on page 56 for "no monitoring" hookup. To configure the System for No Monitoring, connect or jumper EDM1 (pin 3) to EDM2 (pin 2) using the supplied wire-nut. Set the configuration DIP switch to the 2-channel EDM position, per "System Configuration Settings" on page 61.

An alternate method to configure no monitoring is to set the configuration DIP switch to the 1-channel EDM position, according to "System Configuration Settings" on page 61, and connect EDM1 (pin 3) to +24 V DC. This method allows the use of the auxiliary output (see "Auxiliary (OSSD Follow/Fault) Output" on page 48) in applications that do not require the EDM function.

**WARNING:**

- **Retrofit of two-channel EDM Installations**
- If the required wiring changes are not made, the device connected to pin 2 (Orn/Blk) will not be monitored and could result in undetected faults and create an unsafe condition, which could result in serious bodily injury or death.
- In existing installations that use two-channel external device monitoring (default setting of EZ-SCREEN and EZ-SCREEN LP systems), **the parallel wiring of the N.C. monitoring contacts must be rewired for the series connection used for 1-channel EDM**.
- **If there are any questions concerning retrofit installations, contact Banner Engineering.**

### 5.4.6 Emitter Remote Test Input

An emitter connection is provided (Test) for the connection of an external remote test switch (typically a normally open contact held closed). Opening this switch “turns OFF” the emitter, simulating an interruption of the light beams; all OSSD outputs will turn OFF. This input is used in conjunction with the emitter Test/Reset DIP switch. See "Emitter Specifications" on page 17, "System Operation" on page 61, and "Emitter Wiring Options" on page 54.

### 5.4.7 Auxiliary (OSSD Follow/Fault) Output

EZ-SCREEN LP receivers have an auxiliary status output that provides a PNP current-sourcing output (250 mA maximum) that mirrors the state of the OSSDs or indicates a lockout (ON = Fault) and is used for control functions that are not safety-related.

A typical use is to signal the state of the OSSDs to a programmable logic controller (PLC).

The output is on pin 2 (orange/black wire) when the EDM configuration DIP switch is set to the 1-channel monitoring position, according to "System Configuration Settings" on page 61. See the 1-channel EDM circuit on "Generic Receiver Wiring—Interface Module" on page 56 for wiring information.

To use the auxiliary output in an application configured for no monitoring, set the configuration DIP switch to the 1-channel monitoring position, according to "System Configuration Settings" on page 61, and connect EDM1 (pin 3) to +24 V DC (see "Machine Primary Control Elements and EDM Input" on page 50).


© Banner Engineering Corp. All rights reserved.

**The emitter also has a Fault output** that can be enabled to indicate the emitter lockout status (see "System Configuration Settings" on page 61).

## 5.4.8 Sensor Interchangeability

The figures and table below illustrate a wiring option that provides sensor interchangeability (or swapability)—the ability to install either sensor at either QD connection. The resulting installation provides the ability to swap the emitter and receiver position. This wiring option provides advantages during installation, wiring, and troubleshooting. To use this option, connect all emitter wires in parallel (color-for-color) to the receiver cable via individual wires or the CSB.. splitter cordset.

Model CSB.. splitter cordsets and DEE2R.. double-ended cordsets allow easy interconnection between an EZ-SCREEN LP receiver and emitter, providing a single homerun cordset.

*Figure 36. Individual Cordsets*

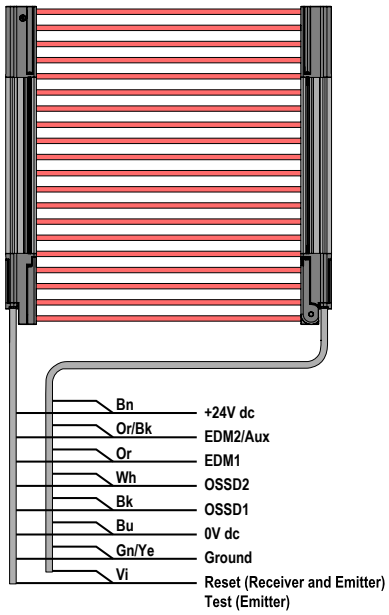


*Figure 37. Splitter Cordsets*

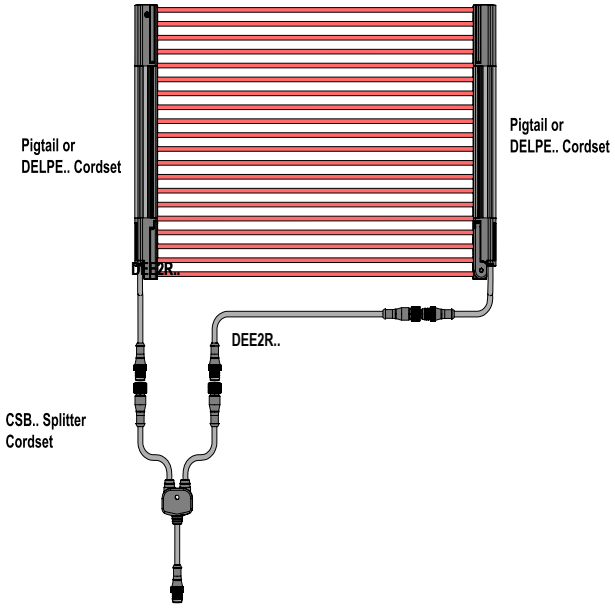


*Table 8. Parallel emitter/receiver hookup for easy sensor interchange*

| Wire Color (Pin #) | Default | | | OR Fault | | | OSSD Follow | | |
|---|---|---|---|---|---|---|---|---|---|
| | Wire Function | DIP Switch Settings | | Wire Function | DIP Switch Settings | | Wire Function | DIP Switch Settings | |
| | | Receiver | Emitter | | Receiver | Emitter | | Receiver | Emitter |
| Brown (#) | +24 V DC | 2-channel EDM Aux. Output  | Fault OFF  | +24 V DC | 1-channel EDM Fault Out  | Fault ON  | +24 V DC | 1-channel EDM Aux. Output  | Fault OFF  |
| Orange/Black (#2) | EDM2 | | | Fault | | | Aux | | |
| Orange (#3) | EDM1 | | | EDM1 | | | EDM1 | | |
| White #4 | OSSD2 | | | OSSD2 | | | OSSD2 | | |
| Black (#5) | OSSD1 | | | OSSD1 | | | OSSD1 | | |
| Blue (#6) | 0 V DC | | | 0 V DC | | | 0 V DC | | |
| Green/Yellow (#7) | Ground | | | Ground | | | Ground | | |
| Violet (#8) | Reset | | | Reset | | | Reset | | |

Notes (for parallel wiring):

- Reset will reset both emitter and receiver in all options.
- OR Fault configuration will indicated if the emitter or the receiver has locked out.
- Emitter Test function is not available when the emitter is connected in parallel (swapable hookup) to the receiver.

Only relevant DIP switch settings are specified.


© Banner Engineering Corp. All rights reserved.

# 5.5 Wiring Diagrams

## 5.5.1 Reference Wiring Diagrams

Other interfacing modules and solutions are available, see "Accessories" on page 79 and www.bannerengineering.com.

**NOTE:** For interfacing modules or remotely located safety I/O blocks where pin 5 of a 5-pin M12 QD is not earth ground, a 4-pin cordset where pin 5 is not physically present or is not electrically connected can be used (such as MQDEC-406SS double-ended cordset). In such situations, earth ground must be provided via the mounting brackets.

## 5.5.2 Emitter Wiring Options

An EZ-SCREEN LP emitter can be connected either to its own power supply or to the receiver cable, color-for-color. The color-for-color wiring allows the emitter and receiver positions to be interchanged without rewiring. If the color-for-color wiring is used, the emitter Test function is not available.

### Generic Emitter Wiring Diagram

*Figure 38. Emitter—Generic wiring*

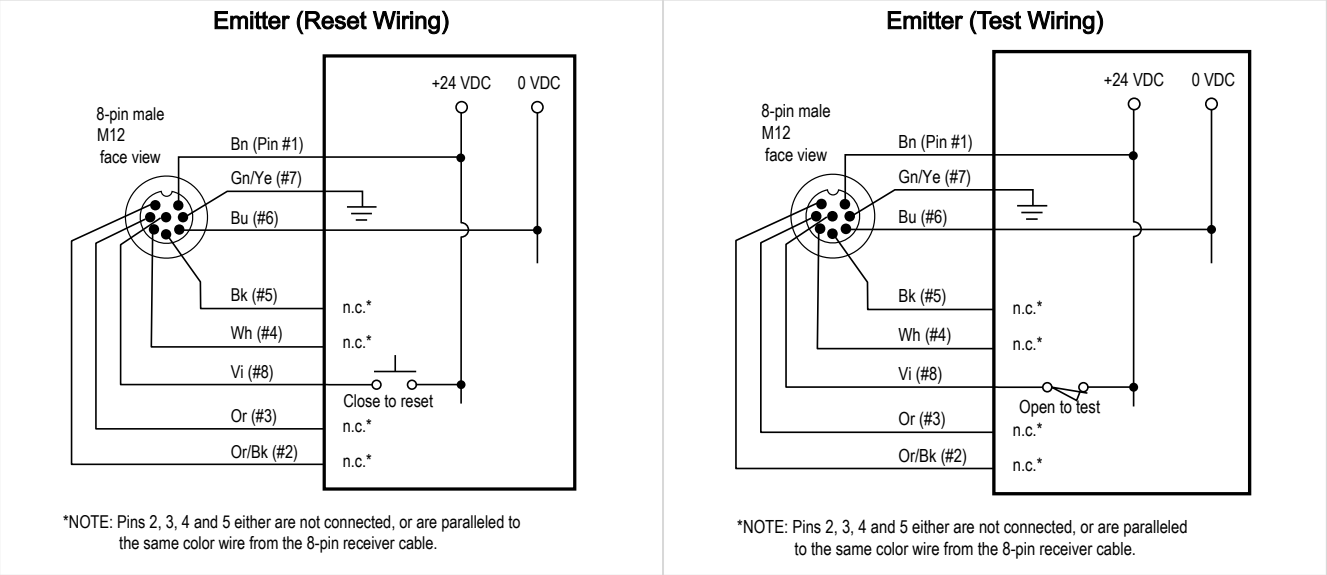



© Banner Engineering Corp. All rights reserved.

## 5.5.3 Generic Receiver Wiring—FSDs (Manual Reset)

*Figure 39. Generic wiring for FSDs (2-channel EDM, manual reset)*

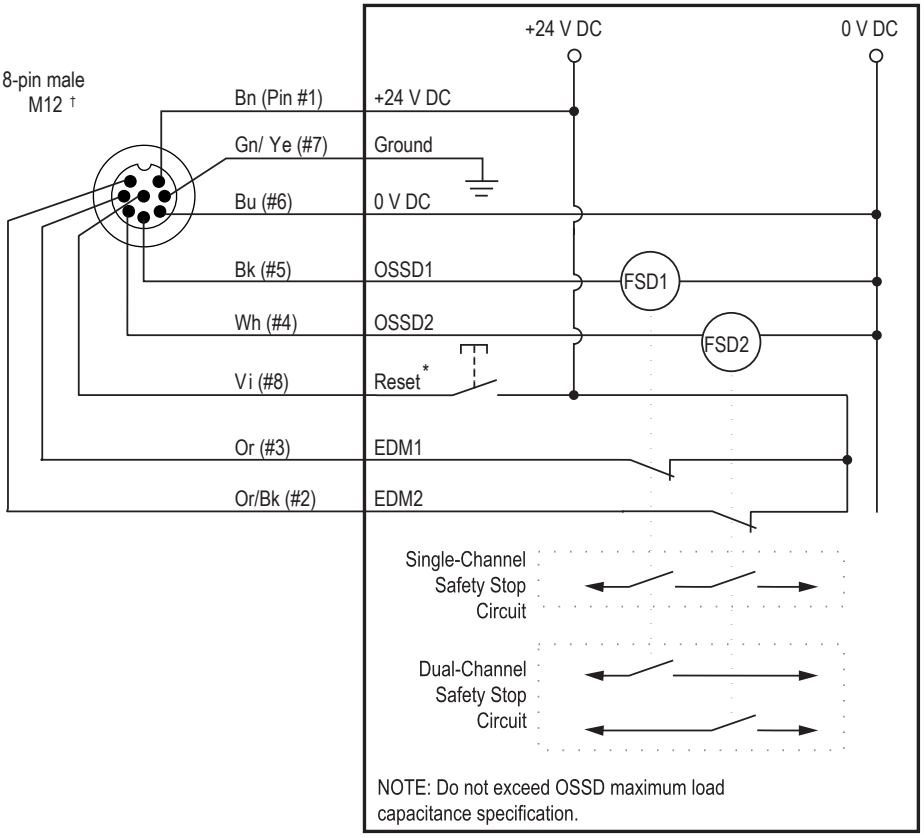


*Trip (auto reset) - Not connected

†See "Cordsets" on page 79 for more cordset information.


© Banner Engineering Corp. All rights reserved.

## 5.5.4 Generic Receiver Wiring—Self-checking Safety Module, Safety Controller, Safety PLC

*Figure 40. Generic wiring for self-checking safety module, Safety Controller, safety PLC (no monitoring, automatic reset)*

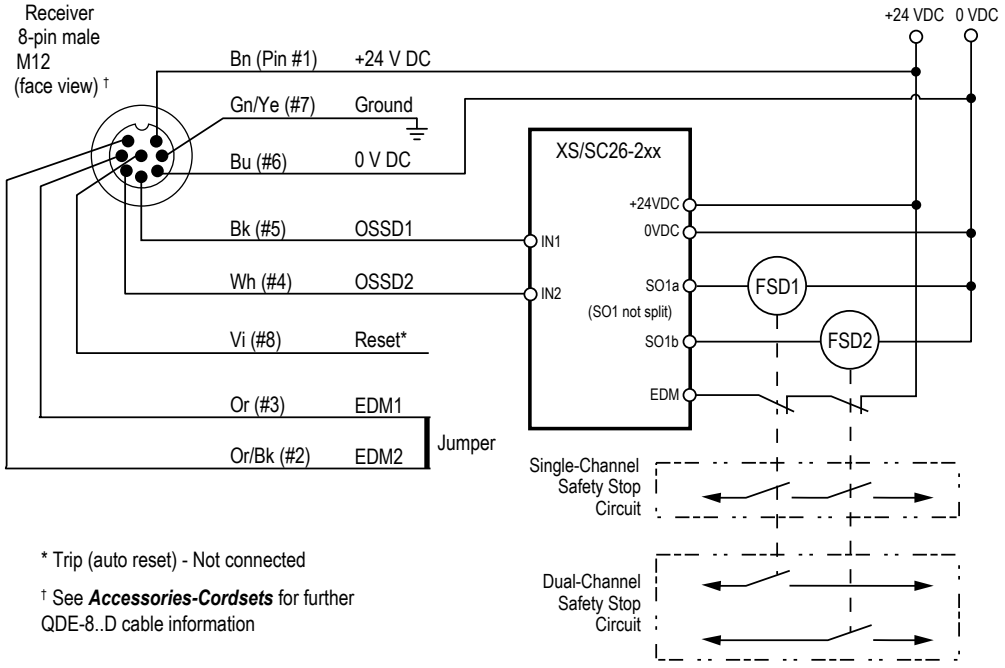


**NOTE:** EZ-SCREEN LP receiver DIP switches are configured for “Trip” (T) output and 2-channel EDM. If the Auxiliary output is to be used, configure the EZ-SCREEN LP receiver for 1-channel EDM and connect pin #3 (Or) to +24 V DC.

## 5.5.5 Generic Receiver Wiring—Interface Module

**WARNING:**

- **Properly install arc or transient suppressors**
- Failure to follow these instructions could result in serious injury or death.
- Install any suppressors as shown across the coils of the machine primary control elements. Do not install suppressors directly across the output contacts of the safety or interface module. In such a configuration, it is possible for suppressors to fail as a short circuit.

See "Cordsets" on page 79 for additional cordset information.


© Banner Engineering Corp. All rights reserved.

*Figure 41. Generic wiring for an interface module (2-Channel EDM, Manual Reset)*

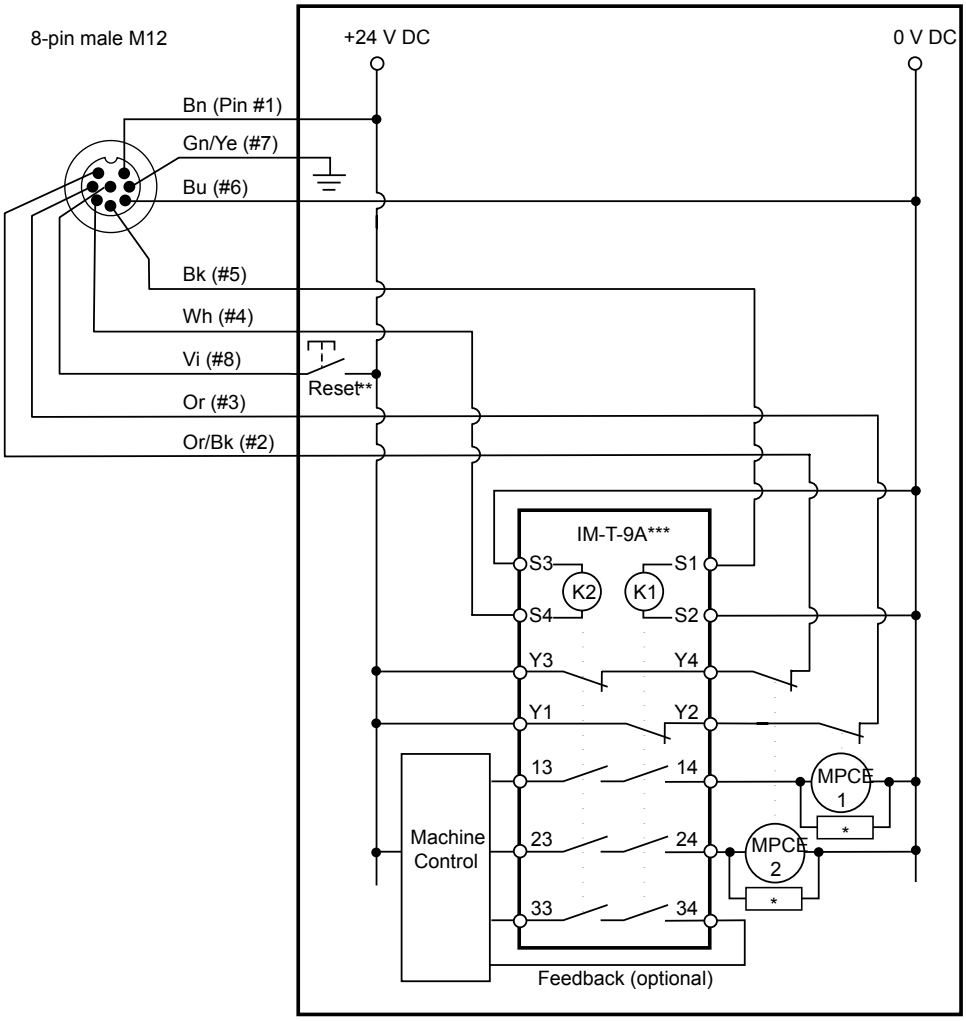


*Installation of transient (arc) suppressors across the coils of MPCE1 and MPCE2 is recommended (see WARNING).

*** Other interfacing modules and solutions available, see "Cordsets" on page 79 or www.bannerengineering.com.

** Trip (auto reset)—Not connected


© Banner Engineering Corp. All rights reserved.

*Figure 42. Generic wiring for an interface module (1-Channel EDM, Manual Reset)*

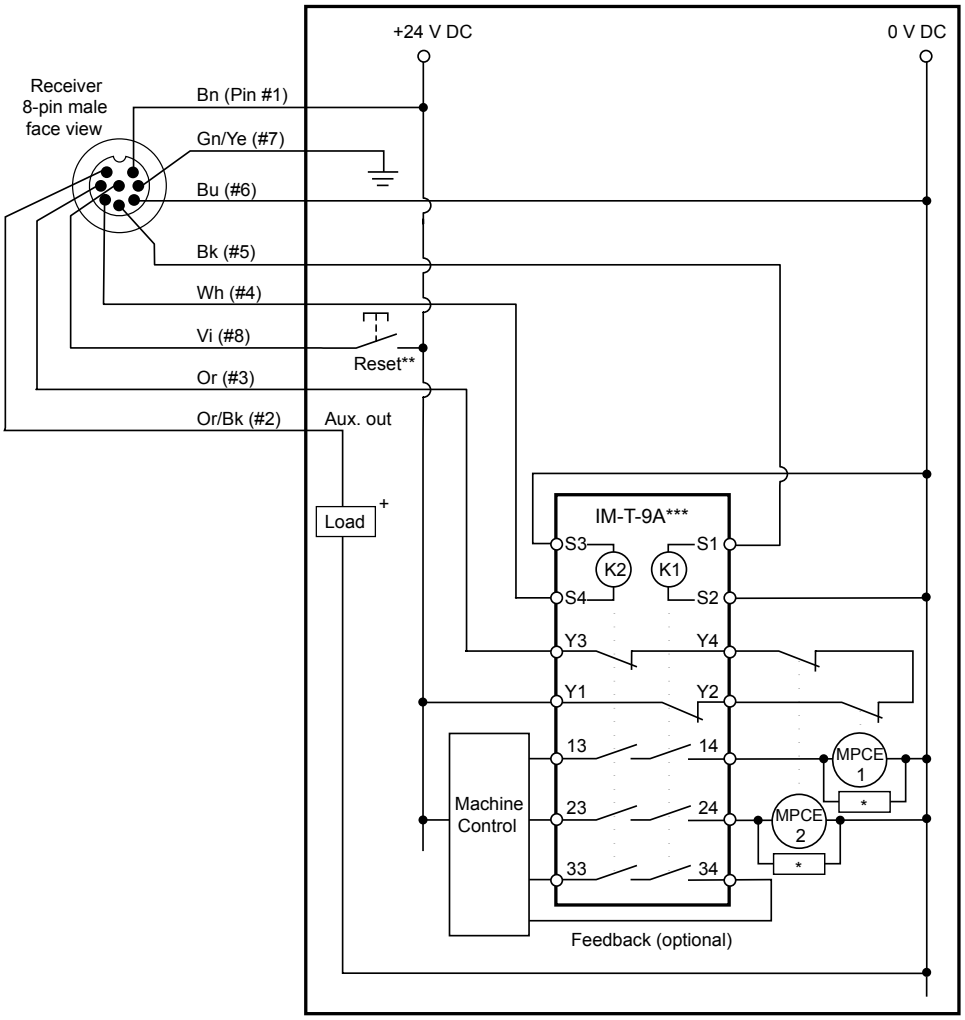


*Installation of transient (arc) suppressors across the coils of MPCE1 and MPCE2 is recommended (see WARNING).

** Trip (auto reset)—Not connected

*** Other interfacing modules and solutions available, see "Cordsets" on page 79 or www.bannerengineering.com.

## 5.6 Preparing for System Operation

After the initial trip test has been accomplished, and the OSSD safety outputs and EDM connections have been made to the machine to be controlled, the EZ-SCREEN LP is ready for testing in combination with the guarded machine.

The operation of the EZ-SCREEN LP with the guarded machine must be verified before the combined System and machine may be put into service. To do this, a Qualified Person must perform the Commissioning Checkout Procedure (see "Commissioning Checkout" on page 59).


© Banner Engineering Corp. All rights reserved.

### 5.6.1 Commissioning Checkout

Perform this checkout procedure as part of the System installation after the System has been interfaced to the guarded machine, or whenever changes are made to the System (either a new configuration of the EZ-SCREEN LP or changes to the machine). A Qualified Person must perform the procedure. Checkout results should be recorded and kept on or near the guarded machine as required by applicable standards.

**WARNING:**

- **Do not use the system until the checkouts are verified**
- Attempts to use the guarded/controlled machine before these checks are verified could result in serious injury or death.
- If all these checks cannot be verified, do not attempt to use the safety system that includes the Banner Engineering Corp. device and the guarded/controlled machine until the defect or problem has been corrected.

Follow these steps to prepare the System for this checkout.

1. Examine the guarded machine to verify that it is of a type and design compatible with the EZ-SCREEN LP System. See "Appropriate Applications" on page 9 for a list of appropriate and inappropriate applications.
2. Verify that the EZ-SCREEN LP is configured for the intended application.
3. Verify that the safety distance (minimum distance) from the closest danger point of the guarded machine to the defined area is not less than the calculated distance, per "Calculating the Safety Distance (Minimum Distance)" on page 19.
4. Verify that:
   a. Access to any dangerous parts of the guarded machine is not possible from any direction not protected by the EZ-SCREEN LP System, hard (fixed) guarding, or supplemental safeguarding, and
   b. It is not possible for a person to stand between the defined area and the dangerous parts of the machine, or
   c. Supplemental safeguarding and hard (fixed) guarding, as described by the appropriate safety standards, are in place and functioning properly in any space (between the defined area and any hazard) that is large enough to allow a person to stand undetected by the EZ-SCREEN LP.
5. If used, verify that all reset switches are mounted outside and in full view of the guarded area, out of reach of anyone inside the guarded area, and that means of preventing inadvertent use is in place.
6. Examine the electrical wiring connections between the EZ-SCREEN LP OSSD outputs and the guarded machine's control elements to verify that the wiring meets the requirements stated in "Electrical Connections to the Guarded Machine" on page 48.
7. Inspect the area near the defined area (including work pieces and the guarded machine) for reflective surfaces (see "Adjacent Reflective Surfaces" on page 25). Remove the reflective surfaces if possible by relocating them, painting, masking or roughening them. Remaining problem reflections will become apparent during the Trip Test.
8. Verify that power to the guarded machine is Off. Remove all obstructions from the defined area. Apply power to the EZ-SCREEN LP System. If the EZ-SCREEN LP is configured for Manual Power-Up, the amber Status indicator will be double-flashing. Perform a manual reset (close the reset switch for 0.25 to 2 seconds, then open the switch).
9. Observe the Status indicators and Diagnostic Display:
   - **Lockout:** Status flashing red; all others Off
   - **Blocked:** Status On red; one or more Zone indicators On red; Reset On amber
   - **Clear:** Status On green[1]; all Zone indicators On green[2]; Reset On amber
   - **Latch:** (defined area clear) Status On red; all Zone indicators On green; Reset double-flashing amber
10. A Blocked condition indicates that one or more of the beams is misaligned or interrupted. To correct this situation, see "Optical Alignment" on page 42. If the System is in a Latch condition, perform a manual reset.
11. After the green and amber Status indicators are On, **perform the trip test** ("Perform a Trip Test" on page 46) on each sensing field to verify proper System operation and to detect possible optical short circuits or reflection problems. **Do not continue until the EZ-SCREEN LP passes the trip test.**

**IMPORTANT: Do not expose any individual to any hazard during the following checks.**

[1] The status indicator flashes green if reduced resolution is enabled.
[2] The Zone indicators flash green if fixed blanking is enabled.


© Banner Engineering Corp. All rights reserved.

**WARNING:**

- **Clear the guarded area before applying power or resetting the system**
- Failure to clear the guarded area before applying power could result in serious injury or death.
- Verify that the guarded area is clear of personnel and any unwanted materials before applying power to the guarded machine or before resetting the system.

12. Apply power to the guarded machine and verify that the machine does not start up.
13. Interrupt (block) the defined area with the supplied test piece and verify that it is not possible for the guarded machine to be put into motion while the beam(s) is blocked.
14. Initiate machine motion of the guarded machine and, while it is moving, use the supplied test piece to block the defined area. Do not attempt to insert the test piece into the dangerous parts of the machine. Upon blocking any beam, the dangerous parts of the machine must come to a stop with no apparent delay.
15. Remove the test piece from the beam; verify that the machine does not automatically restart, and that the initiation devices must be engaged to restart the machine.
16. Remove electrical power to the EZ-SCREEN LP. Both OSSD outputs should immediately turn Off, and the machine must not be capable of starting until power is re-applied to the EZ-SCREEN LP.
17. Test the machine stopping response time, using an instrument designed for that purpose, to verify that it is the same or less than the overall system response time specified by the machine manufacturer. **Do not continue operation until the entire checkout procedure is complete and all problems are corrected.**


© Banner Engineering Corp. All rights reserved.

Chapter Contents

6.1 Security Protocol ..... 61
6.2 System Configuration Settings ..... 61
6.3 Reset Procedures ..... 64
6.4 Status Indicators ..... 65
6.5 Normal Operation ..... 69
6.6 Periodic Checkout Requirements ..... 70

# Chapter 6 System Operation

## 6.1 Security Protocol

Certain procedures for installing, maintaining, and operating the EZ-SCREEN LP must be performed by either Designated Persons or Qualified Persons.

A **Designated Person** is identified and designated in writing, by the employer, as being appropriately trained and qualified to perform system resets and the specified checkout procedures on the EZ-SCREEN LP. The Designated Person is empowered to:

- Perform manual resets and hold possession of the reset key (see "Reset Procedures" on page 64)
- Perform the Daily Checkout Procedure

A **Qualified Person**, by possession of a recognized degree or certificate of professional training, or by extensive knowledge, training, and experience, has successfully demonstrated the ability to solve problems relating to the installation of the EZ-SCREEN LP System and its integration with the guarded machine. In addition to everything for which the Designated Person is empowered, the Qualified Person is empowered to:

- Install the EZ-SCREEN LP System
- Perform all checkout procedures
- Make changes to the internal configuration settings
- Reset the System following a Lockout condition

## 6.2 System Configuration Settings

If not previously configured, System settings are made on the configuration panels located on each sensor, behind the access door. The access door is opened by loosening the factory-installed screw (M2 / Phillips #1).

The receiver has redundant Trip/Latch and Reduced Resolution DIP switches, which must be set identically. Failure to do so will cause a Lockout condition when power is applied. **If the corresponding pairs of DIP switches are not set identically, the EZ-SCREEN LP will not operate.**

**Power to the EZ-SCREEN LP receiver should be OFF when changing DIP switch settings (other than Scan Code) or a Lockout will occur.**

After configuration settings are verified/set, fully close the access door and tighten the screw to maintain the sensor IP rating.


© Banner Engineering Corp. All rights reserved.

*Figure 43. Accessing the configuration switches*

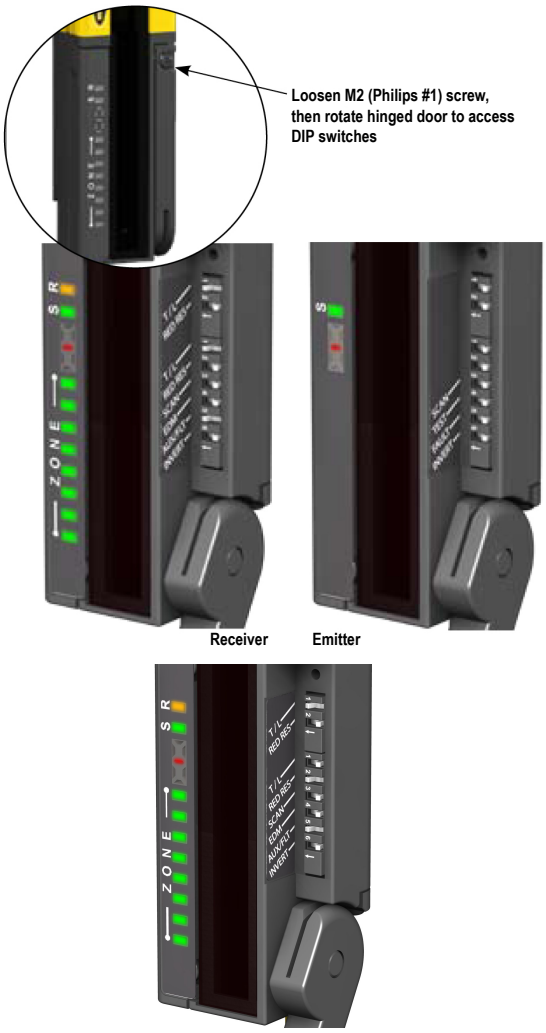


Underlined entries indicate factory defaults. “Left” and “right” refer to positions as shown.

*Table 9. DIP Switch Settings*

| Label | Left Position (<–) | Right Position (–>) |
|---|---|---|
| **T/L** | Trip Output | Latch Output |
| **RED RES** | 2-Beam Reduced Resolution enabled | Reduced Resolution Off |
| **SCAN** | Scan Code 2 | Scan Code 1 |
| **EDM** | 1-Channel EDM (E1) | 2-Channel EDM (E2) |
| **AUX/FLT** | Aux (OSSD follow) | Fault (lockout) |
| **INVERT** | Inverted display | OFF (Standard display) |
| **TEST (Emitter)** | Test function | Reset function |
| **FAULT (Emitter)** | ON | OFF |

**Trip or latch output operation** is selected on two DIP switches in the receiver configuration port. Both switches must be set to the same setting. If they have different settings, an error code displays. If the switches are set for trip output (T), the EZ-SCREEN LP will auto-reset after a blocked condition. If the switches are set for latch output (L), it will require a manual reset.

**Reduced Resolution:** Enables or disables two-beam reduced resolution, and is selected on two DIP switches that must be set to the same setting.

> **NOTE:** Enabling reduced resolution will affect the minimum safety distance (see "Calculating the Safety Distance (Minimum Distance)" on page 19).


© Banner Engineering Corp. All rights reserved.

**External Device Monitoring (EDM):** EDM mode is selected via a 2-position DIP switch on the receiver. For 1-channel monitoring, set the EDM DIP switch to the 1-channel EDM position. For 2-channel monitoring or no monitoring, set the switch to the 2-channel EDM position (see "Machine Primary Control Elements and EDM Input" on page 50).

**Scan code** is used to allow operation of multiple pairs of emitters and receivers in close proximity by enabling a receiver to recognize beams only from an emitter with the same Scan Code setting. This helps minimize the effects of crosstalk between multiple emitter/receiver pairs and allows multiple pairs to operate in close proximity in certain situations. The scan code may be set to 1 or 2, via DIP switches on each component. The scan code setting for each emitter must agree with its corresponding receiver. Scan code settings may be changed while in Run mode without causing a Lockout.

**Auxiliary/Fault Output (Receiver):** Determines whether the receiver auxiliary output follows the state of the OSSDs (output On = Green Status LED) or if the sensor is in a lockout (output ON = Fault). When 2-channel monitoring (EDM) is selected, these aux. output options are not available and this DIP switch setting has no effect (see "External Device Monitoring" on page 50).

**Inverted Display:** Inverts the 7-segment display for readability when sensors are mounted with the indicator end facing up. DIP switch position Off results in standard orientation.

**Test/Reset:** This emitter-only function is used to configure the violet wire (pin 8) for either a Reset function (similar to the receiver), or for a Test function. An external switch, typically a normally open contact, held closed, is connected between the emitter and 24 V DC. Opening the switch “turns off” the emitter, simulating an interruption of one or more light beams. This function may be useful for EZ-SCREEN LP setup and to verify machine control circuit operation.

**NOTE:** The emitter Test function can not be used in a color-for color (swapable) wiring.

**Fault (Emitter):** This emitter-only function is used to determine whether the emitter Fault signal is active (+24V) when the emitter locks out. Options are On or Off. If the color-for-color (swapable) wiring is used and the receiver is configured for 2-channel EDM or OSSD follow, set this switch to OFF; if the system is configured for OR fault function, set this switch to ON (see "Sensor Interchangeability" on page 53).

### 6.2.1 Selectable Trip/Latch Outputs

The setting for Trip or Latch Output determines whether the System will enter RUN mode automatically after power-up, or if it will require a manual reset first. If the System is set for Trip Output, other measures must be taken to prevent a pass-through hazard.

- If Trip Output is selected, the OSSD outputs will turn ON after power is applied and the receiver passes its internal self-test/synchronization and recognizes that all beams are clear. The OSSD outputs will also turn on after all beams are cleared following a blocked beam.
- If Latch Output is selected, the EZ-SCREEN LP requires a manual reset for the OSSD outputs to turn ON, whenever power is applied and all beams are clear, or following a blocked beam.

**WARNING:**

- **Use of automatic (trip) or manual (latch) start/restart**
- Failure to follow these instructions could result in a serious injury or death.
- Applying power to the Banner Engineering Corp. device, clearing the defined area, or resetting a latch condition must not initiate dangerous machine motion. Design the machine control circuitry so that one or more initiation devices must be engaged to start the machine (a conscious act), in addition to the Banner Engineering Corp. device going into Run mode.

### 6.2.2 Manual Resets and Lockout Conditions

Perform the reset routine as described.

The EZ-SCREEN LP requires a manual reset to clear a Power-Up Lockout or Latch condition and after the cause of a Lockout condition is corrected. This function is designed to provide a monitored manual reset (that is, an open-closed-open action), such that a shorted or tied-down button cannot cause a reset. When a key-operated switch is used, it is typically called a key reset. (Reset switch is sold separately.)

To perform a manual reset:

1. Close the normally open switch for at least 0.25 second, but no longer than 2 seconds.
2. Re-open the switch.


© Banner Engineering Corp. All rights reserved.

A Lockout condition causes the EZ-SCREEN LP OSSD outputs to turn off. A Lockout condition is indicated by a flashing red emitter or receiver Status indicator and an error number displayed on the Diagnostic Display. Lockout conditions require a manual reset routine to return the System to Run mode after the failure has been corrected. For a description of possible lockouts, their causes, and troubleshooting hints, see "Troubleshooting" on page 71.

**Trip Output/Auto Reset**—While the use of a reset switch is recommended, it is not required for EZ-SCREEN LP receivers that are configured for Trip Output (automatic reset). Cycling the supply power (Off for > 2 seconds, then On) also clears lockouts if their cause has been corrected.

If a reset switch is not used, leave pin 8 (violet wire) not connected (open) and secure it against shorting to a source of power or ground.

# 6.3 Reset Procedures

System resets are performed using an external reset switch. This switch must be located outside the guarded area, and must not be within reach from within the guarded area (see "Reset Switch Location" on page 24). Its location should provide a clear view of the entire safeguarded area. If any hazardous areas are not in view from the switch location, additional means of safeguarding must be provided. The switch should be protected from accidental or unintended actuation (for example, through the use of rings or guards).

If supervisory control of the reset switch is required, a key switch may be used, with the key kept in the possession of a Designated or Qualified Person. Using a key switch provides some level of personal control, since the key may be removed from the switch. This hinders a reset while the key is under the control of an individual, but must not be relied upon solely to guard against accidental or unauthorized reset. Spare keys in the possession of others or additional personnel entering the safeguarded area unnoticed may create a hazardous situation.

## 6.3.1 Emitter and Receiver Resets

**WARNING:**

- **Lockouts and power failures indicate a problem**
- Attempts to continue to operate machinery by bypassing the Banner Engineering Corp. device or other safeguards is dangerous and could result in serious injury or death.
- A Qualified Person[1] must immediately investigate the problem.

**WARNING:**

- **Shut down the machinery before servicing**
- Servicing the Banner Engineering Corp. device or system while the hazardous machinery is operational could result in serious injury or death.
- The machinery to which the Banner Engineering Corp. device or system is connected must not be operating at any time during major service or maintenance. This might require lockout/tagout procedures (refer to OSHA1910.147, ANSI Z244-1, ISO 14118 or the applicable standard for controlling hazardous energy).

The EZ-SCREEN LP receiver and emitter each have a Reset input that provides for a manual reset input signal.

The receiver requires a manual reset to clear a Latch condition and resume operation following a stop command. Internal Lockout conditions also require a manual reset to return either the emitter or the receiver to Run mode after the failure has been corrected. Emitter resets are needed only in the unlikely event that a Lockout occurs.

Receiver manual resets are required in the following situations:

- Trip Output operation – only after a Lockout (see "Lockout Conditions" on page 71 for causes).
- Latch Output operation – at power-up, after each Latch condition occurs, or after a Lockout.

**Reset Routine**

To reset the receiver:

[1] A person who, by possession of a recognized degree or certificate of professional training, or who, by extensive knowledge, training and experience, has successfully demonstrated the ability to solve problems relating to the subject matter and work.


© Banner Engineering Corp. All rights reserved.

1. Close the reset switch for 0.25 to 2 seconds.
2. Open the reset switch.

An alternative method to reset either component after a lockout is to power the sensor down, then power it up.

If reset switch model MGA-KSO-1 (see "Accessories" on page 79 ) is used:

1. Turn the key 1/4 turn clockwise to close.
2. Turn the key counterclockwise, back to its original position, to open.

**NOTE:** Closing the reset switch too long will cause the sensor to ignore the reset request; the switch must be closed from 0.25 seconds to 2 seconds, but no longer.

**NOTE:** If the receiver is set for latch output, a manual reset using a remote switch, as described in "Reset Procedures" on page 64, is required to resume full operation.

## 6.4 Status Indicators

Status indicators on both the emitter and receiver are clearly visible on each sensor’s front panel.

**Emitter:**

| Key | Description |
|---|---|
| A | Status Indicator (Red/Green)—shows whether power is applied, and whether the emitter is in Run mode, TEST mode, or Lockout condition. |
| B | 7-segment Diagnostic Display—indicates specific error or configuration conditions. |

*Figure 44. Emitter*

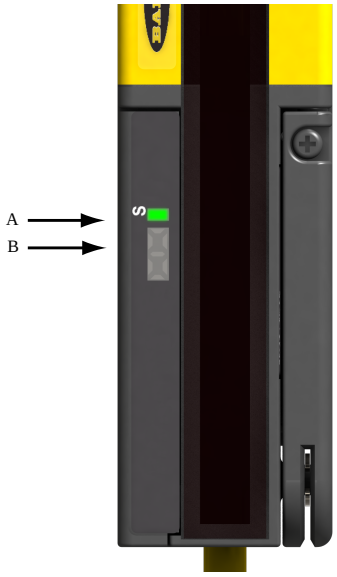



© Banner Engineering Corp. All rights reserved.

**Receiver:**

1-Digit Diagnostic Display—indicates specific error, configuration conditions, or total number of blocked beams.

| Key | Description |
|---|---|
| **A** | Reset indicator (Yellow)—shows System status:<br>• Run mode (ON)<br>• Waiting for a reset (flashing) |
| **B** | Status indicator (Red/Green)—shows System status:<br>• Reduced Resolution enabled (flashing green)<br>• Outputs are ON or OFF (green ON or red ON)<br>• The System is in Lockout condition (flashing red) |
| **C** | 7-Segment Diagnostic Display |
| **D** | Zone indicators (Red/Green)—each shows status of approximately 1/8 of the total beams:<br>• Aligned and clear (green ON)<br>• Blocked and/or misaligned (red ON)<br>• Fixed blanked area (flashing green) |
| **E** | Zone 1 Indicator—indicates beam synchronization status |

*Figure 45. Receiver*

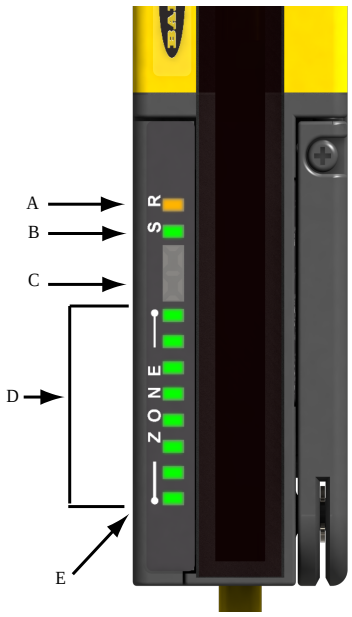


## 6.4.1 Emitter Status Indicator Codes

A single bi-color red/green Status indicator shows whether power is applied, and whether the emitter is in a Run mode, Test mode, or a Lockout. A Diagnostic Display indicates a specific error code when the emitter is in Lockout; the display also momentarily indicates the scan code setting at power-up or when changed.

*Table 10. Emitter status indicator operation*

| Operating Status | Status Indicator | 7-Segment Diagnostic Display |
|---|---|---|
| Power-up | Red Single Flash | Scan code flashes 3 times - sequentially<br>C1 or C2 |
| Run Mode | Green | - |
| Test Mode | Flashing Green | - |
| Lockout | Flashing Red | Displays error code (see "Troubleshooting" on page 71) |

## 6.4.2 Receiver Status Indicator Codes

A single bi-color red/green Status indicator shows when the OSSD outputs are On (green) or Off (red), or the System is in Lockout status (flashing red).

An amber status indicator shows when the system is in Run mode or is waiting for a reset.

The Diagnostic Display indicates the receiver's trip (–) or latch (L) configuration and displays a specific error code when the receiver is in Lockout. The Diagnostic Display also momentarily indicates the scan code setting at power-up or when changed.

Bi-color red/green Zone indicators that show whether a section of the defined area is aligned and clear, or is blocked and/or misaligned. All models have 8 Zone indicators, each of which indicates Blocked/Clear conditions for approximately 1/8 of the total light screen.


© Banner Engineering Corp. All rights reserved.

## Receiver Status Indicator Operation - Trip Output

| Operating Mode | Reset Indicator | Status Indicator | Zone Indicators[1] | 7-Segment Diagnostic Display | OSSD Outputs |
|---|---|---|---|---|---|
| Power-up | Off | Single-Flash Red | All Single-Flash Red | Scan code flashes 3 times - sequentially  | Off |
| Alignment Mode - Beam 1 Blocked | Off | Red | Zone 1 Red, Others Off |  | Off |
| Alignment Mode - Beam 1 Clear | Off | Red | Red or Green | Total number of blocked beams | Off |
| Run Mode - Clear | On | Solid Green or Flashing Green[2] | All On Green |  | On |
| Run Mode - Blocked | On | Red | Red or Green | Total number of blocked beams | Off |
| Lockout | Off | Flashing Red | All Off | Displays error code (see "Troubleshooting" on page 71) | Off |

## Receiver Status Indicator Operation - Latch Output

| Operating Mode | Reset Indicator | Status Indicator | Zone Indicators * | 7-Segment Diagnostic Display | OSSD Outputs |
|---|---|---|---|---|---|
| Power-up | Off | Single-Flash Red | All Single-Flash Red | Scan code flash 3 times - sequentially  | Off |
| Alignment Mode - Beam 1 Blocked | Off | Red | Zone 1 Red*, Others Off |  | Off |
| Alignment Mode - Beam 1 Clear | Off | Red | Red or Green | Total number of blocked beams | Off |
| Alignment Mode - All Beams Clear | Double-Flash | Red | All On green | Off | Off |
| Run Mode - Clear | On | Solid Green or Flashing Green (flashing if Reduced Resolution is enabled.) | All On Green |  | On |
| Latched - Blocked Beam 1 Blocked | On | Red | Red or Green* |  | Off |
| Latched - Blocked Beam 1 Clear | On | Red | Red or Green* | Total number of blocked beams | Off |
| Latched - Clear | Flashing | Red | All On Green |  | Off |
| Lockout | Off | Flashing Red | Off | Displays error code (see "Lockout Conditions" on page 71) | Off |

* If beam 1 is blocked, Zone indicators 2–8 will be Off, because beam 1 provides the synchronization signal for all the beams.

## Status Indicators for Cascaded Applications

When multiple light screens are cascaded, some unique indications may occur, as indicated.

When a receiver's CSSI input is in a Stop condition (because of a blocked light screen further upstream in the cascade, or because of a Stop signal from an E-stop button, for example), the display on the downstream receivers, including the master receiver, will be bracketed by a pair of vertical "goalposts." See "Receiver Error Codes" on page 73 for an illustration.

*Table 11. Receiver #1 (Master — Configured for Latch Operation)*

| Condition | OSSDs | Display | Reset Indicator | Status Indicator |
|---|---|---|---|---|
| Clear | On |  | On | Green |

Continued on page 68

[1] If beam 1 is blocked, Zone indicators 2–8 will be Off, because beam 1 provides the synchronization signal for all the beams.
[2] Flashing if Reduced Resolution is enabled.


© Banner Engineering Corp. All rights reserved.

Continued from page 67

| Condition | OSSDs | Display | Reset Indicator | Status Indicator |
|---|---|---|---|---|
| CSSI Stop (Receiver #2, 3, or 4 is blocked) | Off | H | On | Red |
| Latch | Off | L | Flashing | Red |

*Table 12. Receiver #2, 3, or 4 (Configured for Trip Operation)*

| Condition | OSSDs | Display | Reset Indicator | Status Indicator |
|---|---|---|---|---|
| Clear | On | - | On | Green |
| Blocked | Off | # of beams blocked | On | Red |
| CSSI Stop (Receiver upstream is blocked) | Off | H | On | Red |
| Cleared | On | - | On | Green |

*Table 13. Cascade indicator status conditions*

*Figure 46. Cascade powered up clear*

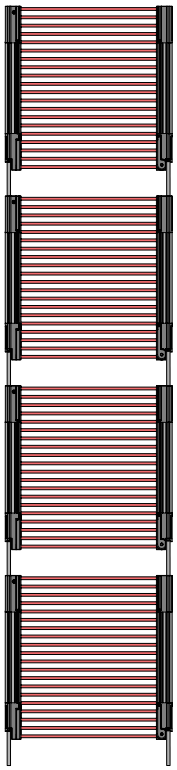


*Figure 47. An object is blocking light curtain 4*

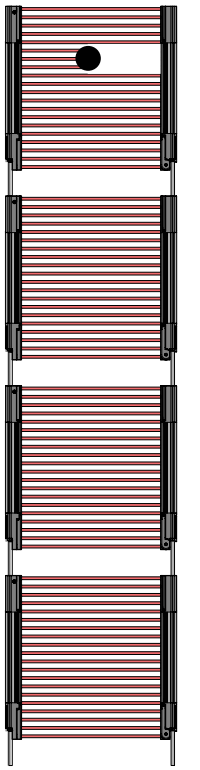


Continued on page 69


© Banner Engineering Corp. All rights reserved.

Continued from page 68

*Figure 48. The object is blocking light curtain #3*

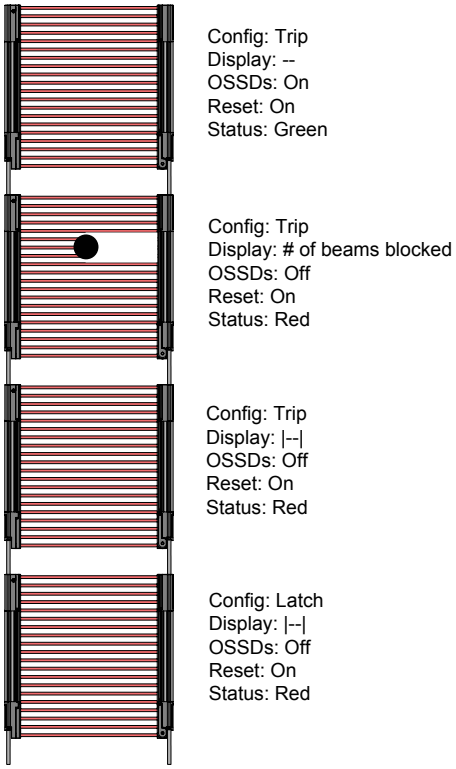


*Figure 49. The object has been removed; cascade is waiting for reset*

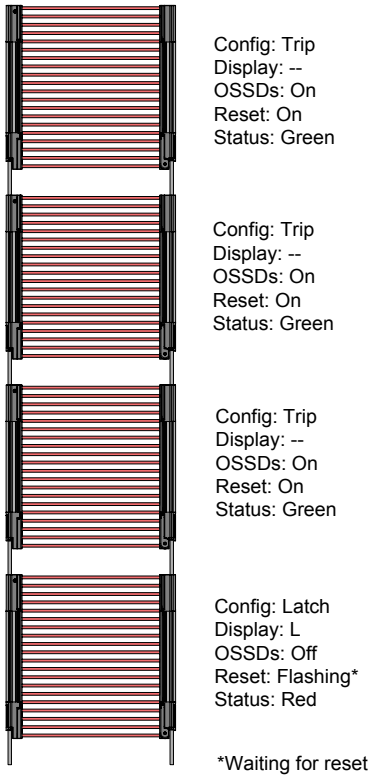


# 6.5 Normal Operation

## 6.5.1 System Power-Up

The EZ-SCREEN LP powers up in one of two ways, depending on the trip/latch output configuration. If it is set for trip output, it powers up and resets automatically; if it is set for latch output, it requires a manual reset procedure after the power-up and sensor alignment.

**Trip Output Power-Up**: When power is applied, each sensor conducts self-tests to detect critical internal faults, determine configuration settings, and prepare the EZ-SCREEN LP for operation. If either sensor detects a critical fault, scanning ceases, the receiver outputs remain Off and diagnostic information displays on the sensor's Diagnostic Display. If no faults are detected, the EZ-SCREEN LP automatically enters Alignment mode, and the receiver looks for an optical sync pattern from the emitter. If the receiver is aligned and receives the proper sync pattern, it enters Run mode and begins scanning to determine the blocked or clear status of each beam. No manual reset operation is required.

**Latch Output Power-Up**: When power is applied, each sensor conducts self-tests to detect critical internal faults, determine configuration settings, and prepare for operation. If either sensor detects a critical fault, scanning ceases, the receiver outputs remain Off and diagnostic information is displayed on the sensor's Diagnostic Display. If no faults are detected, the EZ-SCREEN LP automatically enters Alignment mode, and the receiver looks for an optical sync pattern from the emitter. If the receiver is aligned and receives the proper sync pattern, it begins scanning to determine the blocked or clear status of each beam. When all beams are aligned, the Yellow Reset indicator double-flashes to indicate the EZ-SCREEN LP is waiting for a manual reset. After a valid manual reset, the EZ-SCREEN LP enters Run mode and continues scanning.

## 6.5.2 Run Mode

**Trip Output Configuration**: If any beams become blocked while the EZ-SCREEN LP is running with trip output selected, the receiver outputs turn Off within the stated EZ-SCREEN LP response time (see "Specifications" on page 17). If all the beams then become clear, the receiver outputs come back On. No resets are needed. All required machine control resets are provided by the machine control circuit.


© Banner Engineering Corp. All rights reserved.

**Latch Output Configuration**: If any beams become blocked while the EZ-SCREEN LP is running with latch output selected, the receiver outputs turn Off within the stated EZ-SCREEN LP response time (see "Specifications" on page 17). If all the beams then become clear, the receiver Zone indicators will all be Green and the Reset indicator single-flashes, indicating the EZ-SCREEN LP is waiting for a manual latch reset. In latch output operation, the outputs come back On only when all beams are clear and after a manual reset. The EZ-SCREEN LP will wait for a manual reset; when a valid reset signal is received and all beams remain clear, the receiver outputs turn On.

**Internal Faults (Lockouts)**: If either sensor detects a critical fault, scanning ceases, the receiver outputs turn Off and diagnostic information displays on the sensor's Diagnostic Display. For resolution of error/fault conditions, see "Lockout Conditions" on page 71.

## 6.6 Periodic Checkout Requirements

To ensure continued reliable operation, the System must be checked out periodically. Banner Engineering highly recommends performing the System checkouts as described below. However, a Qualified Person should evaluate these recommendations, based on the specific application and the results of a machine risk assessment, to determine the appropriate content and frequency of checkouts.

**At every shift change, power-up, and machine setup change,** the Daily Checkout should be performed; this checkout may be performed by a Designated or Qualified Person.

**Semi-annually,** the System and its interface to the guarded machine should be thoroughly checked out; this checkout must be performed by a Qualified Person (see "Schedule of Checkouts" on page 78). A copy of these test results should be posted on or near the machine.

**Whenever changes are made to the System** (either a new configuration of the EZ-SCREEN LP System or changes to the machine), perform the Commissioning Checkout (see "Commissioning Checkout" on page 59).

**Verify Proper Operation** The EZ-SCREEN LP can operate as it is designed only if it and the guarded machine are operating properly, both separately and together. It is the user's responsibility to verify this, on a regular basis, as instructed in "Schedule of Checkouts" on page 78. Failure to correct such problems can result in an increased risk of harm. Before the System is put back into service, verify that the EZ-SCREEN LP System and the guarded machine perform exactly as outlined in the checkout procedures and any problem(s) are found and corrected.


© Banner Engineering Corp. All rights reserved.

Chapter Contents

7.1 Lockout Conditions ..... 71
7.2 Recovery Procedures ..... 71
7.3 Electrical and Optical Noise ..... 77

# Chapter 7 Troubleshooting

## 7.1 Lockout Conditions

**WARNING:**
- **Shut down the machinery before servicing**
- Servicing the Banner Engineering Corp. device or system while the hazardous machinery is operational could result in serious injury or death.
- The machinery to which the Banner Engineering Corp. device or system is connected must not be operating at any time during major service or maintenance. This might require lockout/tagout procedures (refer to OSHA1910.147, ANSI Z244-1, ISO 14118 or the applicable standard for controlling hazardous energy).

A Lockout condition causes all of the EZ-SCREEN LP OSSD outputs to turn or remain Off, sending a stop signal to the guarded machine. Each sensor provides diagnostic error codes to assist in the identification of the cause(s) of lockouts (see "Emitter Error Codes" on page 73 and "Receiver Error Codes" on page 73) or the Diagnostic Error Code label supplied in the documentation pack).

In addition, emitters internally monitor the infrared LEDs, and provide a health status indication whenever one of these components has degraded. The emitter will not lockout in this situation. Rather, the indication is intended to notify the user that the emitter should be replaced soon.

**WARNING:**
- **Lockouts and power failures indicate a problem**
- Attempts to continue to operate machinery by bypassing the Banner Engineering Corp. device or other safeguards is dangerous and could result in serious injury or death.
- A Qualified Person[1] must immediately investigate the problem.

The following tables indicate a sensor lockout condition:

*Table 14. Receiver Lockout Conditions*

| Indicator | Receiver Lockout Conditions | Emitter Lockout Conditions |
|---|---|---|
| **Reset indicator** | Off | |
| **Status indicator** | Flashing red | Flashing red |
| **Zone indicators** | Off | |
| **Diagnostic display** | Error code (flashing) | Error code (flashing) |

## 7.2 Recovery Procedures

To recover from a Lockout condition, correct all errors and perform a single sensor reset sequence as described below.

[1] A person who, by possession of a recognized degree or certificate of professional training, or who, by extensive knowledge, training and experience, has successfully demonstrated the ability to solve problems relating to the subject matter and work.


© Banner Engineering Corp. All rights reserved.

### 7.2.1 Emitter and Receiver Resets

**WARNING:**
- **Lockouts and power failures indicate a problem**
- Attempts to continue to operate machinery by bypassing the Banner Engineering Corp. device or other safeguards is dangerous and could result in serious injury or death.
- A Qualified Person[1] must immediately investigate the problem.

**WARNING:**
- **Shut down the machinery before servicing**
- Servicing the Banner Engineering Corp. device or system while the hazardous machinery is operational could result in serious injury or death.
- The machinery to which the Banner Engineering Corp. device or system is connected must not be operating at any time during major service or maintenance. This might require lockout/tagout procedures (refer to OSHA1910.147, ANSI Z244-1, ISO 14118 or the applicable standard for controlling hazardous energy).

The EZ-SCREEN LP receiver and emitter each have a Reset input that provides for a manual reset input signal.

The receiver requires a manual reset to clear a Latch condition and resume operation following a stop command. Internal Lockout conditions also require a manual reset to return either the emitter or the receiver to Run mode after the failure has been corrected. Emitter resets are needed only in the unlikely event that a Lockout occurs.

Receiver manual resets are required in the following situations:

- Trip Output operation – only after a Lockout (see "Lockout Conditions" on page 71 for causes).
- Latch Output operation – at power-up, after each Latch condition occurs, or after a Lockout.

**Reset Routine**

To reset the receiver:

1. Close the reset switch for 0.25 to 2 seconds.
2. Open the reset switch.

An alternative method to reset either component after a lockout is to power the sensor down, then power it up.

If reset switch model MGA-KSO-1 (see "Accessories" on page 79 ) is used:

1. Turn the key 1/4 turn clockwise to close.
2. Turn the key counterclockwise, back to its original position, to open.

**NOTE:** Closing the reset switch too long will cause the sensor to ignore the reset request; the switch must be closed from 0.25 seconds to 2 seconds, but no longer.

**NOTE:** If the receiver is set for latch output, a manual reset using a remote switch, as described in "Reset Procedures" on page 64, is required to resume full operation.

[1] A person who, by possession of a recognized degree or certificate of professional training, or who, by extensive knowledge, training and experience, has successfully demonstrated the ability to solve problems relating to the subject matter and work.


© Banner Engineering Corp. All rights reserved.

## 7.2.2 Emitter Error Codes

| Diagnostic Display[1] | Error Description | Appropriate Action |
|---|---|---|
|  | **Emitter Error**<br>This error can occur either due to excessive electrical noise or due to an internal failure. | • Reset the emitter per "Reset Procedures" on page 64<br>• If the error clears, perform the daily checkout procedure (per EZ-SCREEN Checkout Procedures: Shift and Daily Checkout Procedure; Daily Checkout Card). If the System checks out, resume operation. If the System fails, replace the emitter<br>• If the error continues, check the ground connection (see "Cordsets" on page 79)<br>• If the sensor has a good earth ground connection, check for electrical noise (see "Electrical and Optical Noise" on page 77)<br>• If the error persists, replace the emitter |
|  | **Excessive Noise Error**<br>This error can occur due to excessive electrical noise. | • Reset the emitter per "Reset Procedures" on page 64<br>• If the error clears, perform the daily checkout procedure (per EZ-SCREEN Checkout Procedures: Shift and Daily Checkout Procedure; Daily Checkout Card). If the System checks out, resume operation. If the System fails, replace the emitter<br>• If the error continues, check the ground connection (see "Cordsets" on page 79)<br>• If the sensor has a good earth ground connection, check for electrical noise (see "Electrical and Optical Noise" on page 77)<br>• If the error persists, replace the emitter |
|  | **Emitter LED Problem**<br>This is not an error. | This indication can occur due to a potential problem with an LED and is provided as an early warning indicator |
| **"Axx"/"cxx"**, where "xx" are alpha-numeric characters | **Advanced Diagnostics** for the purpose of factory troubleshooting and repair; not intended for field troubleshooting. | If advanced diagnostic codes are inadvertently displayed, toggle the Invert Display DIP switch (to the opposite state and back, within 1 second) to return to the standard error code display |

## 7.2.3 Receiver Error Codes

| Diagnostic Display [2] | Error Description | Cause of Error and Appropriate Action |
|---|---|---|
|  | **Output Error**<br>**Error is caused by:**<br>• one or both outputs being shorted to a power supply (high or low)<br>• by shorting OSSD 1 to OSSD 2<br>• by an overload (greater than 0.5 A) | • Disconnect the OSSD loads and reset the receiver.<br>• If the error clears, the problem is in the OSSD load(s) or in the load wiring.<br>• If the error continues with no load connected, replace the receiver. |
|  | **Reset Input Error**<br>This error occurs when the Reset switch is closed (or the wiring is shorted to +24 V) during power-up. | • Verify that the reset switch is in the open position.<br>• Reset the receiver per EZ-SCREEN Checkout Procedures: Shift and Daily Checkout Procedure.<br>• If the error remains, disconnect the reset wire at pin 8; cycle power.<br>• If the error clears, the problem is in the reset switch or in the wiring.<br>• If the error continues when the reset wire is disconnected, replace the receiver. |

Continued on page 74

[1] Multiple-digit codes are sequential, followed by a pause.
[2] Multiple-digit codes are sequential, followed by a pause.


© Banner Engineering Corp. All rights reserved.

Continued from page 73

| Diagnostic Display | Error Description | Cause of Error and Appropriate Action |
|---|---|---|
|  | **EDM Input Error**<br>**Can occur for the following reasons:**<br>• EDM wiring configuration does not match the EDM switch configuration<br>• No connection to EDM connections<br>• Both EDM inputs fail to respond within 250 ms of each other<br>• Excessive noise on EDM inputs<br>• Loose QD connection(s) | • Verify that the EDM configuration switches are set correctly and that the wiring is correct for the EDM type configured (see "Machine Primary Control Elements and EDM Input" on page 50).<br>• Reset the receiver.<br>• If the error continues, remove power to the guarded machine, disconnect the OSSD loads, disconnect the EDM input signals, configure EDM for No Monitoring ("Machine Primary Control Elements and EDM Input" on page 50) and conduct the Initial Checkout procedure in "Initial Checkout Procedure" on page 41.<br>• If the error clears, the problem is in the external device contacts or wiring, or is a response-time problem of the external devices. Verify that the EDM wiring is correct and that the external devices meet the requirements described in "Machine Primary Control Elements and EDM Input" on page 50.<br>• If the error continues, check for noise on the EDM inputs (see "Electrical and Optical Noise" on page 77). If error continues, replace the receiver |
|  | **Receiver Error**<br>This error can occur due to either excessive electrical noise or an internal failure. | • Perform a reset per EZ-SCREEN Checkout Procedures: Shift and Daily Checkout Procedure.<br>• If the error clears, perform a Daily Checkout procedure (per EZ-SCREEN Checkout Procedures: Shift and Daily Checkout Procedure; Daily Checkout Card) and if the System checks out, resume operation. If the System fails the Daily Checkout procedure, replace the receiver.<br>• If the error continues, check the ground connection (pin 7).<br>• If the sensor has a good earth ground connection to pin 7, perform the Initial Checkout procedure (per "Initial Checkout Procedure" on page 41).<br>• If the error clears, check the external connections and configuration settings.<br>• If the error continues, replace the receiver. |
|  | **DIP Switch Error**<br>This error can be caused by incorrect DIP switch settings or by changes to the DIP switch settings when the system is On. | • Verify that the DIP switch settings are valid (per "System Configuration Settings" on page 61). Make any corrections necessary and perform a receiver reset.<br>• If the error occurred due to a change of the DIP switch settings while the System was in Run mode, verify the switch settings and perform a receiver reset to resume operation with the new switch settings and modified System configuration.<br>• If the error continues, replace the receiver. |

Continued on page 75


© Banner Engineering Corp. All rights reserved.

Continued from page 74

| Diagnostic Display | Error Description | Cause of Error and Appropriate Action |
|---|---|---|
|  | **EDM1 Error**<br>This error can occur due to EDM 1 input signal failing to respond within 250 ms of the OSSDs changing state (On to Off). | • Verify that the EDM wiring is correct and that the external devices meet the requirements described in "Machine Primary Control Elements and EDM Input" on page 50.<br>• If the error continues, remove power to the guarded machine, disconnect the OSSD loads, disconnect the EDM input signals, configure EDM for No Monitoring (per "Machine Primary Control Elements and EDM Input" on page 50) and conduct the Remote Test Input in "System Operation" on page 61.<br>• If the error clears, the problem is in the External Device contacts or wiring, or is a response-time problem of the external devices. Verify that the EDM wiring is correct and that the external devices meet the requirements described in "Machine Primary Control Elements and EDM Input" on page 50.<br>• If the error continues, check for noise on the EDM inputs (see "Electrical and Optical Noise" on page 77). |
|  | **EDM 2 Error**<br>EDM 2 configuration not valid (wiring or switch). | • Verify that the EDM wiring is correct and that the external devices meet the requirements described in "Machine Primary Control Elements and EDM Input" on page 50<br>• If the error continues, remove power to the guarded machine, disconnect the OSSD loads, disconnect the EDM input signals, configure EDM for no monitoring (per "Machine Primary Control Elements and EDM Input" on page 50) and conduct the initial checkout procedure ("Reset Procedures" on page 64).<br>• If the error clears, the problem is in the external device contacts or wiring, or is a response-time problem of the external devices. Verify that the EDM wiring is correct and that the external devices meet the requirements described in "Machine Primary Control Elements and EDM Input" on page 50.<br>• If the error continues, check for noise on the EDM inputs (see "Electrical and Optical Noise" on page 77). |
|  | **Fixed Blanking Error**<br>This error occurs when beam(s) that have been blanked (programmed to ignore a fixed object) become clear when the object is removed or moved. | • Reposition the object and perform a key reset (or cycle power).<br>• Re-program (teach) the fixed blanked object(s), see "Fixed Blanking" on page 45. |
|  | **Programming Timeout Error**<br>This error occurs when the Fixed Blanking programming mode (teach) exceeds the ten-minute limit. | • Re-program (teach) the fixed blanked object(s), see "Fixed Blanking" on page 45. |

Continued on page 76


© Banner Engineering Corp. All rights reserved.

Continued from page 75

| Diagnostic Display | Error Description | Cause of Error and Appropriate Action |
|---|---|---|
|  | **Cascade Configuration Error**<br>This error occurs when the configuration sequence is incorrectly followed, receiver(s) 2, 3 or 4 are configured, or receiver 1 is moved to a different position in the cascade.<br><br>If this code appears for a noncascaded application, check EDM wiring. | • The CSSI input channel(s) are shorted together or to another source of power or ground.<br>• Configure only the first receiver in the cascade (connected to the machine interface). All other receivers must be set for 2-channel EDM and trip output (T), see "Configuration for Cascaded Operation" on page 100.<br>• Re-configure the first receiver to adapt System to changes or replacement of other receivers, see "Configuration for Cascaded Operation" on page 100.<br>• See "Remote Fixed Blanking Programming Procedures" on page 107 for Remote Fixed Blanking procedures.<br><br>**NOTE:** In a cascaded System, all receivers are connected together, and all emitters are connected together. |
|  | **Excessive Noise Error – Reset Interface**<br>This error can occur due to excessive levels of electrical noise. | • Perform a reset per "Reset Procedures" on page 64.<br>• If the error clears, perform the daily checkout procedure (per EZ-SCREEN Checkout Procedures: Shift and Daily Checkout Procedure; Daily Checkout Card) and if the System checks out, resume operation. If the System fails the Daily Checkout procedure, replace the receiver.<br>• If the error continues, check the ground connection (pin 7).<br>• If the sensor has a good earth ground connection to pin 7, perform the Initial Checkout procedure ("Perform a Trip Test" on page 46).<br>• If the error clears, check for sources of electrical noise (see "Electrical and Optical Noise" on page 77).<br>• If the error continues, replace the receiver. |
|  | **Excessive Noise Error – EDM Interface**<br>This error can occur due to excessive levels of electrical noise. | |
|  | **Excessive Noise Error – Cascade Input**<br>This error can occur due to excessive levels of electrical noise. | |
|  | **Cascade Input Simultaneity**<br>Operation of channels A and B mismatch > 3 seconds. | • Check operation of Channel A and Channel B of cascade input.<br>• Cycle power or cycle the input. See "Emergency Stop Buttons in Cascaded Systems" on page 101 and "Interlock Switches in Cascaded Systems" on page 103. |
| **"Axx"/"bxx"/"Fxx"**, where "xx" are alpha-numeric characters | **Advanced Diagnostics** for the purpose of factory troubleshooting and repair; not intended for field troubleshooting. | If advanced diagnostic codes are inadvertently displayed, toggle the Invert Display DIP switch (to the opposite state and back, within 1 second) to return to the standard error code display. |

## 7.2.4 Test Mode

**If System will not align or go to a Green/Clear condition, the emitter's Test input may be open**. If so, the receiver Reset indicator will be Yellow, all Zone indicators Red, and the Status LED Red; the 7-segment display will show a numerical value equal to the total number of beams, minus one. (Multiple-digit codes are displayed sequentially.) For example, if an array has 55 beams total, the display would indicate 54. The emitter's Status indicator will flash Green. See "Status Indicators" on page 65 and "Receiver Error Codes" on page 73. (Exception: on a 14-beam system only, the Zone 1 indicator will be Green, and all others Red.)


© Banner Engineering Corp. All rights reserved.

*Figure 50. Test Mode*

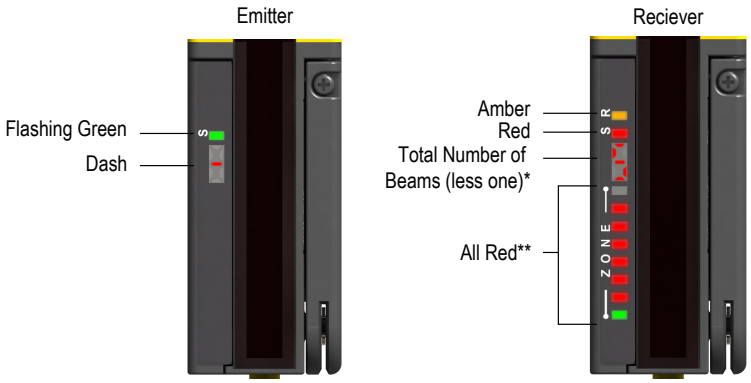


*The 7-segment display sequentially shows a numerical value equal to one less than the total number of beams. For example, if an array has 55 beams total, the display indicates 54.

**Except for 14-beam systems (SLPx25-270 models), where Zone 1 indicator is Green.

Opening a switch or relay contacts connected to the emitter Test connections, or supplying a voltage of less than 3 V DC to Test only, simulates a Blocked condition, for testing purposes. To verify proper operation, measure the voltage between emitter Test (pin 8, violet) and DC COM (pin 6, blue) and refer to the following table:

| Supply Voltage | Other Conditions | Appropriate Action |
|---|---|---|
| 10 to 30 V DC | Emitter should be in Run mode with beam scanning condition | If not, check the +24 V DC (pin 1, brown) to verify proper supply voltage |
| Outside the rated supply voltage specifications | - | Correct the supply voltage and recheck emitter operation |
| 10 to 30 V DC | Test1 is 10 to 30 V DC, but emitter is not in Run mode with beam scanning | Replace the emitter |
| Less than 3 V DC | Emitter should be in Test mode with no scanning occurring | If not in Test mode, replace the emitter |

# 7.3 Electrical and Optical Noise

The EZ-SCREEN LP is designed and manufactured to be highly resistant to electrical and optical noise and to operate reliably in industrial settings. However, serious electrical and/or optical noise may cause a random Trip or Latch condition. In very extreme electrical noise cases, a Lockout is possible. To minimize the effects of transitory noise, the EZ-SCREEN LP responds to noise only if the noise is detected on multiple consecutive scans.

If random nuisance Trips or lockouts occur, check the following:

- Poor connection between the sensor and earth ground
- Optical interference from adjacent light screens or other photoelectrics
- Sensor input or output wires routed too close to noisy wiring

## 7.3.1 Check for Optical Noise Sources

Follow these steps to check for optical noise sources.

1. Turn off the emitter, completely block the emitter, or open the Test input.
2. Use a Banner BT-1 Beam Tracker (see "Alignment Aids" on page 89) to check for light at the receiver.
3. Press the RCV button on the BT-1 and move it across the full length of the receiver's sensing window. If the BT-1's indicator lights, check for emitted light from other sources (other safety light screens, grids or points, or standard photoelectric sensors).


© Banner Engineering Corp. All rights reserved.

Chapter Contents

8.1 Schedule of Checkouts ..... 78

# Chapter 8 Checkout Procedures

This section lists the schedule of checkout procedures and describes where each procedure is documented. Checkouts must be performed as described. Results should be recorded and kept in the appropriate place (for example, near the machine, and/or in a technical file).

Banner Engineering highly recommends performing the System checkouts as described. However, a Qualified Person (or team) should evaluate these generic recommendations, considering their specific application, and determine the appropriate frequency of checkouts. This will generally be determined by a risk assessment, such as the one contained in ANSI B11.0. The result of the risk assessment will drive the frequency and content of the periodic checkout procedures and must be followed.

## 8.1 Schedule of Checkouts

Checkout cards and this manual can be downloaded at www.bannerengineering.com.

| Checkout Procedure | When to Perform | Where to Find the Procedure | Who Must Perform the Procedure |
|---|---|---|---|
| Trip Test | At Installation<br>Any time the System, the guarded machine, or any part of the application is altered. | "Perform a Trip Test" on page 46 | Qualified Person |
| Commissioning Checkout | At Installation<br>Whenever changes are made to the System (for example, either a new configuration of the EZ-SCREEN LP or changes to the guarded machine). | "Commissioning Checkout" on page 59 | Qualified Person |
| Shift/Daily Checkout | At each shift change<br>Machine setup change<br>Whenever the System is powered up<br>During continuous machine run periods, this checkout should be performed at intervals not to exceed 24 hours. | **Daily Checkout Card** (Banner p/n 140045)<br>A copy of the checkout results should be recorded and kept in the appropriate place (for example, near or on the machine, in the machine's technical file). | Designated Person or Qualified Person |
| Semi-Annual Checkout | Every six months following System installation, or whenever changes are made to the System (either a new configuration of the EZ-SCREEN LP or changes to the machine). | **Semi-Annual Checkout Card** (Banner p/n 140047)<br>A copy of the checkout results should be recorded and kept in the appropriate place (for example, near or on the machine, in the machine's technical file). | Qualified Person |


© Banner Engineering Corp. All rights reserved.

Chapter Contents

9.1 Cordsets ..... 79
9.2 Interface Modules ..... 83
9.3 Contactors ..... 83
9.4 AC Boxes ..... 84
9.5 Muting Module ..... 84
9.6 Safety Controllers ..... 84
9.7 Remote Blanking Key Switch Box ..... 85
9.8 External Keyed Reset Switches ..... 85
9.9 Snap-On Lens Shields ..... 85
9.10 EZ-LIGHT for EZ-SCREEN ..... 85
9.11 MSA Series Stands ..... 86
9.12 SSM Series Corner Mirrors ..... 86
9.13 Accessory Mounting Brackets ..... 87
9.14 Alignment Aids ..... 89

# Chapter 9 Accessories

## 9.1 Cordsets

Machine interface cordsets provide power to the first emitter/receiver pair. Sensor interconnect cables provide power to subsequent emitters and receivers in the cascade. Cordsets typically have yellow PVC cables and black overmolds.

A removable disconnect (RD) is required to connect directly to the sensor housing. QD connectors are used for cable-to-cable interconnections and connections to other devices.

### 9.1.1 Connection Options

Models SLP...-...P8

**300 mm cable with a 8-pin M12 QD**

Requires an M12 QD cordset: QDE, DEE2R, or CSM.



Models SLP...-..

**Integral Removable Disconnect (RD)**

Requires an RDLP, DELPE, or DELPEF cordset (for cascading).

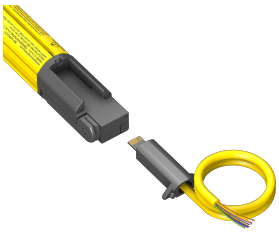

**RD to RD**

Requires an DELP cordset to connect 2nd, 3rd, and 4th sensors in a cascade.

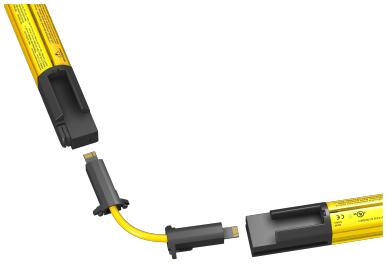

### 9.1.2 RD to Flying Leads Cordsets

Removable disconnect (RD) connector on one end; unterminated (cut to length) on other.

| Model Number | Length | Wire | Cordset Color Code | |
|---|---|---|---|---|
| For Emitters and Receivers | | | Color | Function |
| RDLP-815D | 4.6 m (15.1 ft) | 8-conductor cable, 22 AWG/0.33 mm² 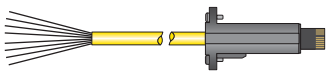 | Brown | +24 V DC |
| | | | Orange/Black | EDM 2 (Aux) |
| RDLP-825D | 8 m (26.2 ft) | | Orange | EDM 1 |
| RDLP-850D | 15.3 m (50.2 ft) | | White | OSSD 2 |
| RDLP-875D | 23 m (75.5 ft) | | Black | OSSD 1 |
| RDLP-8100D | 30.5 m (100.1 ft) | | Blue | 0 V DC |
| | | | Green/Yellow | Gnd/Chassis |

Continued on page 80


© Banner Engineering Corp. All rights reserved.

Continued from page 79

| Model Number | Length | Wire | Cordset Color Code | |
|---|---|---|---|---|
| For Emitters and Receivers | | | Color | Function |
| | | | Violet | Reset |

## 9.1.3 RD to Flying Leads Cordsets (E-Stop/Interlock Connections)

Used to connect devices to receiver cascade input RD connection. Removable disconnect (RD) connector on one end; unterminated (cut to length) on other.

See "Emergency-Stop Switch Requirements (Positive-Opening)" on page 102, "Positive-Opening Interlocking Safety Switches" on page 104, and "Figure: Monitoring positive-opening safety switches on multiple gates" on page 106.

| Model Number | Length | Wire | Banner Cordset Color Code | |
|---|---|---|---|---|
| For Cascade Receivers Only | | | Color | E-Stop Function |
| | | 4-conductor cable, 22 AWG/0.33 mm² | Brown | Ch 1a |
| RDLP6G-415D | 4.6 m (15.1 ft) | | White | Ch 2a |
| RDLP6G-425D | 8 m (26.2 ft) | | Black | Ch 1b |
| RDLP6G-450D | 15.3 m (50.2 ft) | | Blue | Ch 2b |

## 9.1.4 RD to RD Cordsets

Used to interconnect multiple SLPC.. emitters or receivers in a cascade. See "Determining Interconnect Cordset Lengths" on page 94 for maximum cordset lengths.

| Model | Length | Wire | Termination |
|---|---|---|---|
| DELP-110E | 0.05 m (0.2 ft) | 11-conductor cable, 24 AWG/0.20 mm² 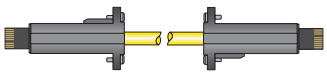 | RD-style removable disconnect fitting at each end, for cascade connections between SLPC.. sensors |
| DELP-111E | 0.3 m (1 ft) | | |
| DELP-113E | 1 m (3.3 ft) | | |
| DELP-118E | 2.5 m (8.2 ft) | | |
| DELP-1115E | 4.6 m (15.1 ft) | | |
| DELP-1125E | 8 m (26.2 ft) | | |
| DELP-1150E | 15.3 m (50.2 ft) | | |
| DELP-1175E | 23 m (75.5 ft) | | |
| DELP-11100E | 30.5 m (100.1 ft) | | |

## 9.1.5 RD to M12 QD Cordset

Used to interconnect SLPC.. and SLSC.. (standard EZ-SCREEN) emitters or receivers in a cascade, or for use with a mating M12 QD cordset, such as **QDE..**, **DEE2R-..**, or **CSB-..**.

| Model | Length | Wire | Termination |
|---|---|---|---|
| DELPE-81D | 0.3 m (1 ft) | 8-conductor cable, 22 AWG/0.33 mm² 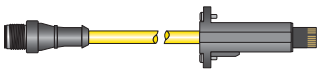 | RD-style removable disconnect fitting at one end, male M12 QD fitting at the other |

## 9.1.6 RD to Female M12 QD and Mating Cordsets

Used to connect E-stop or other devices to sensor input RD connection.

| Model | Length | Wire | Termination |
|---|---|---|---|
| | | 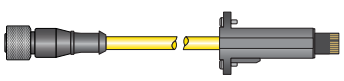 | |

Continued on page 81


© Banner Engineering Corp. All rights reserved.

Continued from page 80

| Model | Length | Wire | Termination |
|---|---|---|---|
| DELPEF-81D | 0.3 m (1 ft) | 8-conductor cable, 22 AWG/ 0.33 mm² | RD-style fitting at one end, female M12 QD fitting at the other to connect to QDE2R4-8..D cordset below |
| QDE2R4-815D | 4.6 m (15 ft) | 8-pin connector, 4-conductor cable, 22 AWG/0.33 mm² | Male M12 QD fitting at one end, flying leads at the other to enable 4-wire hookup to device |
| QDE2R4-825D | 7.6 m (25 ft) | | |
| QDE2R4-850D | 15.2 m (50 ft) | | |

## 9.1.7 M12 to Flying Leads Cordsets

M12 QD connector on one end; unterminated (cut to length) on other to interface with guarded machine. PVC-jacketed overmold and cables.

| Model | Length | Wire | Termination |
|---|---|---|---|
| For 8-pin Emitters and Receivers | | | |
| QDE-815D | 4.5 m (15 ft) | 22 AWG/0.33 mm² | 8-pin M12 female connector on one end; cut to length |
| QDE-825D | 7.6 m (24.9 ft) | | |
| QDE-830D | 9.1 m (30 ft) | | |
| QDE-850D | 15.2 m (49.8 ft) | | |
| QDE-875D | 22.8 m (74.7 ft) | | |
| QDE-8100D | 30.4 m (99.7 ft) | | |

| Banner Cordset Pinout/Color Code | | | European M12 Specification[1] | | | |
|---|---|---|---|---|---|---|
| Pin | Color | Function | Pin | Color | Fun | Connector (female face view) |
| 1 | Brown | +24 V DC | 1 | White | +24 V DC | 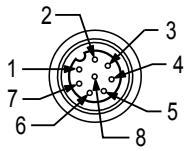 |
| 2 | Orange/ Black | EDM #2 (Aux) | 2 | Brown | EDM #2 (Aux) | |
| 3 | Orange | EDM #1 | 3 | Green | EDM #1 | |
| 4 | White | OSSD #2 | 4 | Yellow | OSSD #2 | |
| 5 | Black | OSSD #1 | 5 | Gray | OSSD #1 | |
| 6 | Blue | 0 V DC | 6 | Pink | 0 V DC | |
| 7 | Green/Yellow | Gnd/Chassis | 7 | Blue | Gnd/Chassis | |
| 8 | Violet | Reset | 8 | Red | Reset | |



## 9.1.8 Splitter Cordsets

Used for easy interconnection between an EZ-SCREEN LP receiver and its emitter, providing a single homerun cable. Model DEE2R-.. double-ended cordsets may be used to extend the QD trunk or either branch. (Branch #1 and branch #2 cable sections are 300 mm/1 ft long.) Model QDE-8..D single-ended cordsets may be used to extend the QD trunk for cut-to-length applications.

[1] The European M12 Specification pin assignment and color codes are listed for reference only. Verify the suitability of these cables for an application.


© Banner Engineering Corp. All rights reserved.

| 8-Pin Threaded M12 Splitter Cordsets—Flat Junction | | | |
|---|---|---|---|
| **Model** | **Trunk (Male)** | **Branches (Female)** | **Pinout** |
| **CSB-M1280M1280** | No trunk | No branches | Male 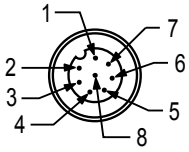  |
| **CSB-M1281M1281** | 0.3 m (1 ft) | 2 x 0.3 m (1 ft) | |
| **CSB-M1288M1281** | 2.44 m (8 ft) | | |
| **CSB-M12815M1281** | 4.57 m (15 ft) | | |
| **CSB-M12825M1281** | 7.62 m (25 ft) | | |
| **CSB-UNT825M1281** | 7.62 m (25 ft) Unterminated | | |
| 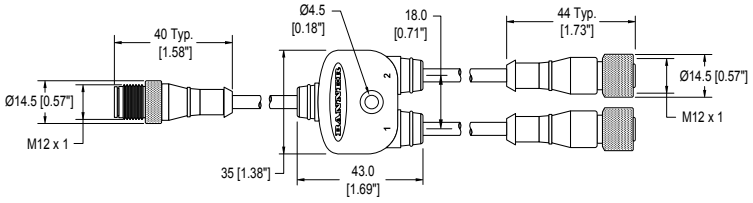  | | | Female 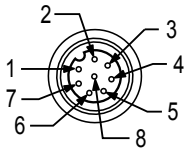  1 = Brown 2 = Or/Bk 3 = Orange 4 = White 5 = Black 6 = Blue 7 = Gn/Ye 8 = Violet |

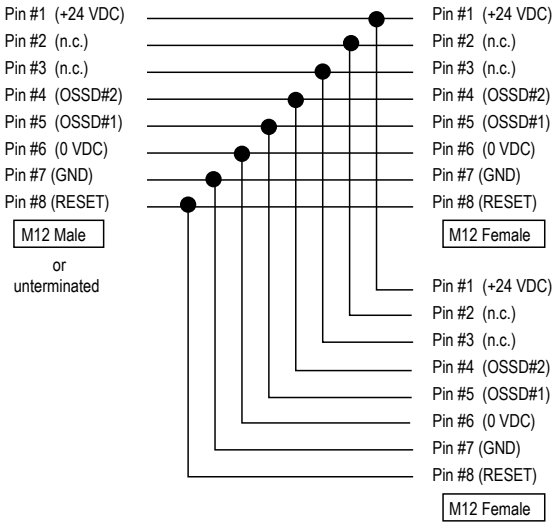


## 9.1.9 Male M12 to Female M12 QD Cordsets

Used for extending either the branch or trunk of a model CSB splitter cordset. M12 connectors, female to male (rotateable). Overmold and cables are PVC-jacketed.

| Model | Length | Wire | Termination |
|---|---|---|---|
| DEE2R-81D | 0.3 m (1 ft) | 8-conductor cable, 22 AWG/0.33 mm² | M12 QD fitting at each end, one male, one female |
| DEE2R-83D | 0.9 m (3 ft) | | |
| DEE2R-88D | 2.5 m (8 ft) | | |
| DEE2R-815D | 4.6 m (15 ft) | | |
| DEE2R-825 | 7.6 m (25 ft) | | |
| DEE2R-830D | 9.1 m (30 ft) | | |
| DEE2R-850D | 15.2 m (50 ft) | | |
| DEE2R-875D | 22.9 m (75 ft) | | |
| DEE2R-8100D | 30.5 m (100 ft) | | |


© Banner Engineering Corp. All rights reserved.

### 9.1.10 DEE8-xxD Adapter M12 QD Cordsets

Used to convert the 8-pin M12 QD from the EZ-SCREEN LP to a 5-pin female M12 QD for connection to a safety BUS gateway/node, a “smart” self-monitored safety module, safety controller, or safety PLC. Overmold and cables are PVC-jacketed.

**DEE8-4..D** cordsets do not have the pin 5 GND/chassis connection. GND/chassis connection should be made via the mounting hardware.

| Model | Length | Wire | Pinout |
|---|---|---|---|
| **DEE8-41D** | 0.3 m (1 ft) | 4-conductor cable, 22 AWG/ 0.33 mm² | 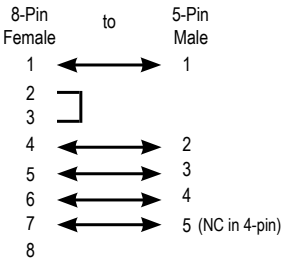  |
| **DEE8-51D** | 0.3 m (1 ft) | 5-conductor cable, 22 AWG/ 0.33 mm² | |

### 9.1.11 Bulkhead Connector

Connector for panel connection of EZ-SCREEN LP component cables.

| Model | Connection | Dimensions |
|---|---|---|
| **PMEF-810D** | 8-pin M12 female connector 3 m (10 ft) wires, cut to length (Banner color code); 22 AWG/0.33 mm² | 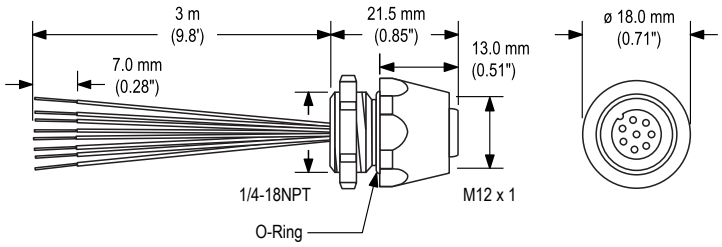  |

## 9.2 Interface Modules

Interface modules provide forced-guided, mechanically-linked relay (safety) outputs for the EZ-SCREEN LP System See the referenced Banner datasheets for more information.

| Model | Description | Datasheet |
|---|---|---|
| **IM-T-9A** | Interface module, 3 normally open (N.O.) redundant-output 6 amp contacts, removable screw terminals | 62822 |
| **IM-T-11A** | Interface module, 2 normally open (N.O.) redundant-output 6 amp contacts, plus 1 normally closed (N.C.) auxiliary contact, removable screw terminals | |
| **SR-IM-9A** | Interface module, 3 normally open (N.O.) redundant-output 6 amp contacts, spring clamp terminals | 208873 |
| **SR-IM-11A** | Interface module, 2 normally open (N.O.) redundant-output 6 amp contacts, plus 1 normally closed (N.C.) auxiliary contact, spring clamp terminals | |

## 9.3 Contactors

The normally closed contacts are used in an external device monitoring (EDM) circuit. If used, two contactors per EZ-SCREEN LP System are required. See datasheet p/n 111881 for additional options and more information.

| Model | Description |
|---|---|
| **11-BG00-31-D-024** | 10 amp positive-guided contactor, 3 normally open (N.O.) and 1 normally closed (N.C.) |

Continued on page 84


© Banner Engineering Corp. All rights reserved.

Continued from page 83

| Model | Description |
|---|---|
| **BF1801L024** | 18 amp positive-guided contactor, 3 normally open (N.O.) and 1 normally closed (N.C.) (N.C. contact rated at 10 amps) |

## 9.4 AC Boxes

AC power supply for use with EZ-SCREEN LP emitters and/or receivers. Models **EZAC-R..** can be interfaced with up to three receivers or two cascaded emitter/receiver pairs; models **EZAC-E..** can power up to four emitters. Box supplies +24 V DC power at 0.7 amps (16.8 W max. power); accepts input voltages from 100 to 250 V AC (50 to 60 Hz); IP65 metal housing. Models are available with external device monitoring (EDM); key reset switch on **EZAC-R..** models (Emitter/Receiver models). See datasheet p/n 120321 for more information.

| Emitter/Receiver Boxes | | | | | |
|---|---|---|---|---|---|
| **Model** | **Outputs** | **EDM** | **Emitter/Receiver Connection** | **AC Power Connection** | **Output and EDM Connections** |
| **EZAC-R9-QE8** | 3 N.O. | Selectable 1- or 2-Channel or no EDM | 8-Pin M12 QD | Hard-wired | Hard-wired |
| **EZAC-R11-QE8** | 2 N.O., 1 N.C. | | | | |
| **EZAC-R15A-QE8-QS83** | 1 N.O. + 1 SPDT (Form C) | 1-Channel | | 3-pin 7/8 in-16UNF QD | 8-pin 7/8 in-16UNF QD |
| **EZAC-R8N-QE8-QS53** | 1 N.O., 1 N.C. | Power Monitoring | | 3-pin 7/8 in-16UNF QD | 5-pin 7/8 in-16UNF QD |
| **EZAC-R10N-QE8-QS53** | 2 N.O. | | | | |

| Emitter-Only Boxes | | | |
|---|---|---|---|
| **Model** | **For Emitter Models** | **Emitter Connection** | **AC Power Connection** |
| **EZAC-E-QE8-QS3** | SLPE..-..Q8 | 8-Pin M12 QD | 3-Pin 7/8 in-16UNF QD |

## 9.5 Muting Module

Provides the muting capability for the EZ-SCREEN LP.

See Banner manual 116390 for more information and additional cabling options.

| Model | Description | |
|---|---|---|
| **MMD-TA-11B** | DIN-mount Muting module | 2 N.O. safety outputs (6 amps), 2 or 4 muting inputs, SSI, override input; IP20; terminal connections |
| **MMD-TA-12B** | | 2 OSSD outputs, 2 or 4 muting inputs, SSI, override input; IP20; terminal connections |

## 9.6 Safety Controllers

Safety Controllers provide a fully configurable, software-based safety logic solution for monitoring safety and non-safety devices.

For additional models and XS26 expansion modules, see instruction manual p/n 174868.

*Table 15. Safety controller models*

| Non-Expandable Models | Expandable Models | Description |
|---|---|---|
| **SC26-2** | **XS26-2** | 26 convertible I/O and 2 redundant solid-state safety outputs |
| **SC26-2d** | **XS26-2d** | 26 convertible I/O and 2 redundant solid-state safety outputs with display |
| **SC26-2e** | **XS26-2e** | 26 convertible I/O and 2 redundant solid-state safety outputs with Ethernet |
| **SC26-2de** | **XS26-2de** | 26 convertible I/O and 2 redundant solid-state safety outputs with display and Ethernet |
| **SC10-2roe** | | 10 inputs, 2 redundant relay safety outputs (3 contacts each) (ISD and Ethernet compatible) |
| | **XS26-ISDd** | 26 inputs, 2 redundant solid-state safety outputs with display, Ethernet, and 8 ISD channels |


© Banner Engineering Corp. All rights reserved.

## 9.7 Remote Blanking Key Switch Box

Used to configure fixed blanking remotely on cascadeable model receivers (when used as a standalone sensor pair, or the last receiver in a cascade). Use with DELPEF-8..D cordset to interface with receiver cascade end and DEE2R-8..D cordset to provide required extension, as needed.

| Model | Description | |
|---|---|---|
| **EZA-RBK-1** | Remote Blanking Key Switch | Allows the frequent configuration of a fixed blanked area, without using the receiver DIP switches |

## 9.8 External Keyed Reset Switches

| Model | Description |
|---|---|
| **EZA-RR-1** | External normally open reset switch with 8-pin M12/Euro-style QD; can be interconnected using cordset models QDE-8..D, DEE2R-8..D, or CSB-..M1281. |
| **MGA-KSO-1** | Panel-mount keyed normally open reset switch |
| **MGA-K-1** | Replacement key for switch MGA-KSO-1 |

## 9.9 Snap-On Lens Shields

Impact-resistant copolyester lens shields snap easily over the entire length of the sensor housing, protecting against metal-cutting fluids and other chemicals. The lens shields are not sealed at the top and bottom and decrease the sensing range by approximately 15% when they are protecting both the emitter and receiver. Order one per sensor.

| Sensor Model | Lens Shield Model | |
|---|---|---|
| SLP..-270..* | LPSS-270 |  |
| SLP..-410.. | LPSS-410 | |
| SLP..-550.. | LPSS-550 | |
| SLP..-690.. | LPSS-690 | |
| SLP..-830.. | LPSS-830 | |
| SLP..-970.. | LPSS-970 | |
| SLP..-1110.. | LPSS-1110 | |
| SLP..-1250.. | LPSS-1250 | |

* Not available in Muting.

## 9.10 EZ-LIGHT for EZ-SCREEN

Provides clear, 360° indication of the of the EZ-SCREEN receiver's output status. Use with a CSB splitter cable and optional DEE2R double-ended cables. See datasheet p/n 121901 for more information.


© Banner Engineering Corp. All rights reserved.

| Models | | Construction | Connector/LED Function/Inputs |
|---|---|---|---|
|  | **M18RGX8PQ8** [1] | Nickel-plated brass housing, M18x1 thread; thermoplastic lens<br>Fully encapsulated IP67 | 8-pin M12 Integral QD<br>Red/Green indication follows OSSD output of the EZ-SCREEN receiver<br>**ON Red:**—Power ON Beam Blocked or Lockout<br>**ON Green:**—Power ON Beam Clear<br>PNP (Sourcing) |
|  | **K30LRGX8PQ8** | Polycarbonate housing, 30 mm thermoplastic dome, 22 mm base mount<br>Fully encapsulated, IP67 | |
|  | **K50LRGX8PQ8** | Polycarbonate housing, 50 mm thermoplastic dome, 30 mm base mount<br>Fully encapsulated, IP67 | |
|  | **K80LRGX8PQ8** | Polycarbonate housing, 50 mm thermoplastic dome, flat or DIN mount<br>Encapsulated electronics, IP67 | |

# 9.11 MSA Series Stands

- Provides mounting T-slots with 20 mm dimension between slots
- Base included. Available without a base by adding the suffix **NB** to the model number (for example, **MSA-S42-1NB**)

| Stand Model | Pole Height | Useable Stand Height | Overall Stand Height | |
|---|---|---|---|---|
| **MSA-S24-1** | 610 mm (24 in) | 483 mm (19 in) | 616 mm (24.25 in) | 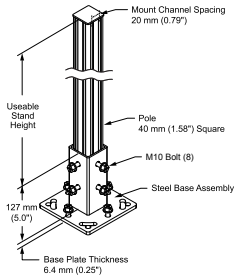 |
| **MSA-S42-1** | 1067 mm (42 in) | 940 mm (37 in) | 1073 mm (42.25 in) | |
| **MSA-S66-1** | 1676 mm (66 in) | 1550 mm (61 in) | 1682 mm (66.25 in) | |
| **MSA-S84-1** | 2134 mm (84 in) | 2007 mm (79 in) | 2140 mm (84.25 in) | |
| **MSA-S105-1** | 2667 mm (105 in) | 2667 mm (100 in) | 2673 mm (105.25 in) | |

# 9.12 SSM Series Corner Mirrors

- Robust for heavy-duty applications.
- Extra wide for use with long-range optical safety systems.
- Rear-surface glass mirrors are rated at 85% efficiency. The total sensing range decreases by approximately 8% per mirror. See mirror datasheet p/n 61934 or www.bannerengineering.com for further information.
- To order the stainless steel reflective surface models, add the suffix **-S** (for example, **SSM-375-S**); range reduction for these models is approximately 30% per mirror. See datasheet p/n 67200.
- Robust construction, two mounting brackets and hardware included.
- In addition to the included SMA-MBK-1 brackets, an EZA-MBK-2 adapter bracket kit is required for use with MSA Series stands; refer to the mounting bracket accessories list.
- Brackets may be inverted from the positions shown, decreasing dimension L1 by 58 mm (2.3 in).

[1] Available in a kit that includes one M18 EZ-LIGHT, one SMB18A mounting bracket, and hardware for mounting to the side channel of an EZ-SCREEN housing (kit model number **EZA-M18RGX8PQ8)**.


© Banner Engineering Corp. All rights reserved.

| Mirror Model | Reflective Area Height (Y) | Mounting Height (L1)[1] | Overall Height (L2) | |
|---|---|---|---|---|
| SSM-100-S | 100 mm (3.9 in) | 211 mm (8.3 in) | 178 mm (7.0 in) | |
| SSM-150-S | 150 mm (5.9 in) | 261 mm (10.3 in) | 228 mm (9.0 in) | |
| SSM-200-S | 200 mm (7.9 in) | 311 mm (12.2 in) | 278 mm (10.9 in) | |
| SSM-250-S | 250 mm (9.8 in) | 361 mm (14.2 in) | 328 mm (12.9 in) | |
| SSM-375-S | 375 mm (14.8 in) | 486 mm (19.1 in) | 453 mm (17.8 in) | |
| SSM-475-S | 475 mm (18.7 in) | 586 mm (23.1 in) | 553 mm (21.8 in) | |
| SSM-550-S | 550 mm (21.7 in) | 661 mm (26.0 in) | 628 mm (24.7 in) | |
| SSM-675-S | 675 mm (26.6 in) | 786 mm (31.0 in) | 753 mm (29.6 in) | |
| SSM-825-S | 825 mm (32.5 in) | 936 mm (36.9 in) | 903 mm (35.6 in) | |
| SSM-875-S | 875 mm (34.4 in) | 986 mm (38.8 in) | 953 mm (37.5 in) | |
| SSM-975-S | 975 mm (38.4 in) | 1086 mm (42.8 in) | 1053 mm (41.5 in) | |
| SSM-1100-S | 1100 mm (43.3 in) | 1211 mm (47.7 in) | 1178 mm (46.4 in) | |
| SSM-1175-S | 1175 mm (46.3 in) | 1286 mm (50.6 in) | 1253 mm (49.3 in) | |
| SSM-1275-S | 1275 mm (46.3 in) | 1386 mm (54.6 in) | 1353 mm (53.3 in) | |
| SSM-1400-S | 1400 mm (55.1 in) | 1511 mm (59.5 in) | 1478 mm (58.2 in) | |
| SSM-1475-S | 1475 mm (58.1 in) | 1586 mm (62.5 in) | 1553 mm (61.1 in) | |
| SSM-1550-S | 1550 mm (61.0 in) | 1661 mm (65.4 in) | 1628 mm (64.1 in) | |
| SSM-1675-S | 1675 mm (65.9 in) | 1786 mm (70.3 in) | 1753 mm (69.0 in) | |
| SSM-1750-S | 1750 mm (68.9 in) | 1861 mm (73.3 in) | 1828 mm (72.0 in) | |
| SSM-1900-S | 1900 mm (74.8 in) | 2011 mm (79.2 in) | 1978 mm (77.9 in) | |

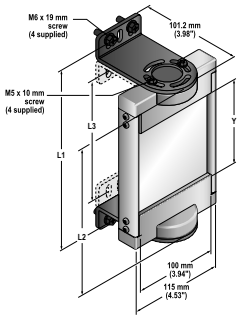


| SSM Models | Light Curtain Series | | | | | |
|---|---|---|---|---|---|---|
| | SLS | S4B | LP | LS | Type 2 | SGS |
| **SSM-100** | | | | | | |
| **SSM-150** | | | | | | |
| **SSM-200** | 150 | | | | 150 | |
| **SSM-250** | | | | | | |
| **SSM-375** | 300 | 300 | 270 | 280 | 300 | |
| **SSM-475** | | | 410 | 350/420 | | |
| **SSM-550** | 450 | 450 | | 490 | 450 | 2–500 |
| **SSM-675** | 600 | 600 | 550 | 560/630 | 600 | |
| **SSM-825** | 750 | 750 | 690 | 700/770 | 750 | |
| **SSM-875** | | | 830 | 840 | | 3–400 |
| **SSM-975** | 900 | 900 | | 910 | 900 | 4–300 |
| **SSM-1100** | 1050 | 1050 | 970 | 980/1050 | 1050 | |
| **SSM-1175** | | | 1110 | 1120 | | |
| **SSM-1275** | 1200 | 1200 | | 1190 | 1200 | 4–400 |
| **SSM-1400** | 1350 | 1350 | 1250 | 1260/1330 | 1350 | |
| **SSM-1475** | | | 1390 | 1400 | | |
| **SSM-1550** | 1500 | 1500 | | 1470 | 1500 | |
| **SSM-1675** | | | 1530 | 1540/1610 | | |
| **SSM-1750** | 1650 | 1650 | 1670 | 1680 | 1650 | |
| **SSM-1900** | 1800 | 1800 | 1810 | 1750/1820 | 1800 | |

## 9.13 Accessory Mounting Brackets

Contact Banner Engineering for more information. Order one LPA-MBK-.. bracket per sensor, two per pair.

[1] The mounting brackets may be inverted from the positions shown at left (flanges pointing “inward” instead of “outward,” as shown). When this is done, dimension L1 decreases by 58 mm (2.3 in).


© Banner Engineering Corp. All rights reserved.

| Model | Description | |
|---|---|---|
| **LPA-MBK-10** | • End-mount bracket<br>• 14 ga (1.9 mm) steel, black zinc plated<br>• Includes two brackets and hardware |  |
| **LPA-MBK-13** | • Adaptor for side-mount bracket LPA-MBK-12<br>• Reorients sensor rotation by 90° (+10°/ −30°)<br>• 14 ga (1.9 mm) steel, black zinc plated<br>• Includes 1 bracket and hardware |  |
| **LPA-MBK-15** | • End-cap bracket for mounting EZ-LIGHT indicators with a 30 mm mounting hub<br>• Uses end-cap plates and die-cast zinc end cap from bracket LPA-MBK-11 (supplied with sensor)<br>• 360º sensor rotation; 14 ga. (1.9 mm) steel, black zinc plated<br>• End-cap bracket kit includes 1 end bracket | 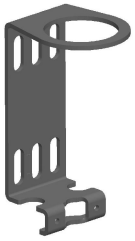 |
| **LPA-MBK-16** | • Side-mounting bracket provides a mounting option that is fully adjustable (lateral and +15/-20° rotational) from the face of the sensor and allows "no blind zone" mounting with minimal or no "gaps" in detection<br>• Zinc diecast<br>• Includes 1 bracket and hardware |  |
| **LPA-MBK-20** | • Universal adapter bracket for mounting to engineered/slotted aluminum framing (for example, 80/20™, Bosch)<br>• Retrofit for Banner MS/US/MG; clearance for M4 and M6 hardware<br>• Use with LPA-MBK-11, -12, or -13<br>• 12 ga (2.66 mm) steel, black zinc plated<br>• Includes 1 bracket and hardware |  |
| **LPA-MBK-22** | • End-cap bracket for mounting sensor inside Unistrut® metal framing; uses end-cap plates from bracket LPA-MBK-11<br>• Fits Unistrut P1000 size, with M6 or 1/4" channel nuts<br>• 14 ga (1.90 mm) steel, black zinc plated; diecast zinc clamps<br>• Includes 2 brackets and hardware |  |
| **LPA-MBK-Pxxx** | • L-shaped bracket for one emitter or receiver protects sensor from weld flash, impact.<br>• Sized to match sensor length; replace “xxx” in model number with sensor size (for example, LPAMBK- P270 for use with sensor SLP..-270..); bracket studs mate with side-mount brackets LPA-MBK-12, included with sensor. Corner notch accommodates cable routing.<br>• +10°/ −30° sensor rotation<br>• 12 ga (2.66 mm) steel, black zinc plated or painted<br>• Includes 1 bracket and hardware |  |


© Banner Engineering Corp. All rights reserved.

| Model | Description | |
|---|---|---|
| **LPA-MBK-21** | • Pivoting “L” bracket system for two cascaded emitters or receivers; uses clamps from sidemount bracket LPA-MBK-12. Order one per cascaded joint; set includes two brackets.<br>• Adjustable 90° to 180° orientation; resolution is 25 mm at < 135°, 28 mm at 120°, and 32 mm at 90° configuration. (Resolution between sensors at the pivot point can be as large as 32 mm.)<br>• +10°/ −30° sensor rotation<br>• 14 ga (1.9 mm) steel, black zinc plated<br>• Cascade brackets join two sensors. Each model number is one set of 2 (mirror image) brackets and hardware. |  |
| **LPA-MBK-90** | • Fixed angled “L” bracket for two cascaded emitters or receivers; uses clamps from sidemount bracket LPA-MBK-12. Order one per cascaded joint; set includes two brackets.<br>• Fixed 90° orientation; maintains 25 mm resolution between sensor pairs<br>• +10°/ −30° sensor rotation<br>• 14 ga (1.9 mm) steel, black zinc plated<br>• Cascade brackets join two sensors. Each model number is one set of 2 (mirror image) brackets and hardware. |  |
| **LPA-MBK-180** | • Fixed inline (straight) bracket for two cascaded emitters or receivers; uses clamps from sidemount bracket LPA-MBK-12. Order one per cascaded joint; set includes two brackets.<br>• Fixed 180° orientation; maintains 25 mm resolution between sensor pairs<br>• +10°/ −30° sensor rotation<br>• 14 ga (1.9 mm) steel, black zinc plated<br>• Cascade brackets join two sensors. Each model number is one set of 2 (mirror image) brackets and hardware. |  |

## 9.14 Alignment Aids

| Model | Description | |
|---|---|---|
| **LAT-1-LP** | Self-contained visible-beam laser tool for aligning any EZ-SCREEN LP emitter/receiver pair. Includes retroreflective target material and mounting clip. |  |
| **LPA-LAT-2** | Replacement adaptor (clip) hardware for EZ-SCREEN LP models | |
| **LPA-LAT-1** | Clip-on retroreflective LAT target | |
| **BRT-THG-2-100** | Two-inch retroreflective tape, 100 ft | |
| **BT-1** | Beam Tracker | |


© Banner Engineering Corp. All rights reserved.

Chapter Contents

10.1 Overview of Cascading ..... 90
10.2 Cascadeable Emitter and Receiver Models—14 mm Resolution ..... 91
10.3 Cascadeable Emitter and Receiver Models—25 mm Resolution ..... 92
10.4 Determining Interconnect Cordset Lengths ..... 94
10.5 Cordset examples for two cascaded light screens ..... 95
10.6 Cordset examples for three cascaded light screens ..... 95
10.7 Cordset examples for four cascaded light screens ..... 96
10.8 Response Time for Cascaded Light Screens ..... 96
10.9 Cascaded Sensor Configuration Settings ..... 100
10.10 Configuration for Cascaded Operation ..... 100
10.11 Emergency Stop Buttons in Cascaded Systems ..... 101
10.12 Interlock Switches in Cascaded Systems ..... 103
10.13 Remote Fixed Blanking ..... 106

# Chapter 10 Cascade

## 10.1 Overview of Cascading

EZ-SCREEN LP emitters and receivers are available in cascadeable models. These models can be used as stand-alone light screens, or can be cascaded up to four pairs in one system. The cascaded sensor pairs can be any length, any number of beams, or have different resolutions (14 mm and 25 mm), as long as each emitter matches its receiver.

**NOTE:** EZ-SCREEN SLP.. (stand-alone) or 8-pin SLSC.. models can be used as the end sensor pair.

The control reliability, installation and alignment, electrical interface to the guarded machine, initial checkout, periodic checkout, troubleshooting and maintenance features of cascadeable models are functionally identical to those of the standard models.

Make a cascade interconnection by using the double-ended removable disconnect DELS-11..E cordsets. Make connections for optional EZ-LIGHT indication (integral or remotely located), interfacing to an E-Stop button or Interlocking switches (hard contacts), and remote fixed blanking at the end receiver or with an individual cascade receiver; see "Cordsets" on page 79. All receivers in a cascade activate the same set of OSSD outputs: the OSSDs of the master receiver.

**NOTE:** In a cascaded system, all receivers are connected together, and all emitters are connected together.

*Figure 51. Cascaded light screens guarding a u-shaped cell*

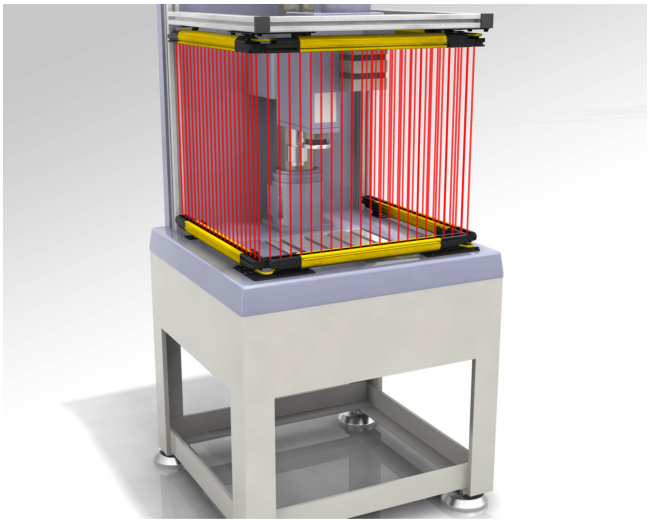


© Banner Engineering Corp. All rights reserved.

### 10.1.1 System Components and Specifications

A multiple-light screen cascaded EZ-SCREEN LP system includes compatible emitter/receiver pairs (up to four), a terminator plug (shipped installed on each cascade receiver) for the last receiver in the cascade, two RD cables or pigtail cables to interface with the machine and provide power to the system, and pairs of double-ended (sensor interface) cables to interconnect the emitters and the receivers in the cascade. (A “dummy” plug is installed at the cascade end of each emitter. It is not required for operation, but maintains the emitter’s IP65 rating.) Additional cordsets may be used to enable quick disconnect (QD) connections; see "Cordsets" on page 79.

The terminator plug (model LPA-TP-1) must be used on the receiver in a stand-alone system, and on the last receiver in a multiple-pair cascade, unless an EZA-RBK-1 key switch box or an RDLP6G-4..D cordset interfaced with an E-stop or other hard contacts is in place (see "Emergency Stop Buttons in Cascaded Systems" on page 101, "Interlock Switches in Cascaded Systems" on page 103, and "Fixed Blanking" on page 45).

**NOTE:** The machine interface cable must connect to the sensor end adjacent to the status indicators.

Available single-ended, double-ended, and splitter cordsets are listed in "Cordsets" on page 79. Cordset lengths are limited – for both the machine interface/power cables and the sensor interconnect cables; see "Determining Interconnect Cordset Lengths" on page 94 for more information.

### 10.1.2 Receiver Display

In Run mode, the 7-segment display shows the following. See "Receiver Error Codes" on page 73 if any indication is flashing.

| Condition | Display |
|---|---|
| Clear |  |
| Latch output operation |  |
| Trip output operation |  |
| Blocked | Number of blocked beams (sequential) |
| CSSI Input Off or open, for example, “upstream” receiver is blocked or in lockout |  Solid (not flashing) |

## 10.2 Cascadeable Emitter and Receiver Models—14 mm Resolution

Only standard yellow housing models are listed. Cabled QD models (for example, **SLPCE14-410P8**) have yellow PVC cable and black PVC QD overmold. For other models, see below.

See www.bannerengineering.com or contact Banner Engineering for kit model numbering scheme.

Order one machine interface cordset for each emitter or receiver; see "Cordsets" on page 79. *For interconnections between cascaded emitters and receivers, use DELP.. series double-ended cordsets.*

| Defined Area | Models | | | Connection | Response Time | # Beams |
|---|---|---|---|---|---|---|
| | Emitter | Receiver | Pair[1] | | | |
| 410 mm | **SLPCE14-410P8** | **SLPCR14-410P8** | **SLPCP14-410P88** | 300 mm (1 ft) PVC-jacketed cable with an 8-pin M12 male quick-disconnect connector | 13.5 ms | 41 |
| | **SLPCE14-410** | **SLPCR14-410** | **SLPCP14-410** | Integral Removable Disconnect (RD) | | |
| 550 mm | **SLPCE14-550P8** | **SLPCR14-550P8** | **SLPCP14-550P88** | 300 mm (1 ft) PVC-jacketed cable with an 8-pin M12 male quick-disconnect connector | 16.5 ms | 55 |
| | **SLPCE14-550** | **SLPCR14-550** | **SLPCP14-550** | Integral Removable Disconnect (RD) | | |

Continued on page 92

[1] A pair includes an emitter and a receiver


© Banner Engineering Corp. All rights reserved.

Continued from page 91

| Defined Area | Models | | | Connection | Response Time | # Beams |
|---|---|---|---|---|---|---|
| | Emitter | Receiver | Pair | | | |
| 690 mm | **SLPCE14-690P8** | **SLPCR14-690P8** | **SLPCP14-690P88** | 300 mm (1 ft) PVC-jacketed cable with an 8-pin M12 male quick-disconnect connector | 19.5 ms | 69 |
| | **SLPCE14-690** | **SLPCR14-690** | **SLPCP14-690** | Integral Removable Disconnect (RD) | | |
| 830 mm | **SLPCE14-830P8** | **SLPCR14-830P8** | **SLPCP14-830P88** | 300 mm (1 ft) PVC-jacketed cable with an 8-pin M12 male quick-disconnect connector | 22.5 ms | 83 |
| | **SLPCE14-830** | **SLPCR14-830** | **SLPCP14-830** | Integral Removable Disconnect (RD) | | |
| 970 mm | **SLPCE14-970P8** | **SLPCR14-970P8** | **SLPCP14-970P88** | 300 mm (1 ft) PVC-jacketed cable with an 8-pin M12 male quick-disconnect connector | 25.5 ms | 97 |
| | **SLPCE14-970** | **SLPCR14-970** | **SLPCP14-970** | Integral Removable Disconnect (RD) | | |
| 1110 mm | **SLPCE14-1110P8** | **SLPCR14-1110P8** | **SLPCP14-1110P88** | 300 mm (1 ft) PVC-jacketed cable with an 8-pin M12 male quick-disconnect connector | 28.5 ms | 111 |
| | **SLPCE14-1110** | **SLPCR14-1110** | **SLPCP14-1110** | Integral Removable Disconnect (RD) | | |
| 1250 mm | **SLPCE14-1250P8** | **SLPCR14-1250P8** | **SLPCP14-1250P88** | 300 mm (1 ft) PVC-jacketed cable with an 8-pin M12 male quick-disconnect connector | 31.5 ms | 125 |
| | **SLPCE14-1250** | **SLPCR14-1250** | **SLPCP14-1250** | Integral Removable Disconnect (RD) | | |
| 1390 mm * | **SLPCE14-1390P8** | **SLPCR14-1390P8** | **SLPCP14-1390P88** | 300 mm (1 ft) PVC-jacketed cable with an 8-pin M12 male quick-disconnect connector | 34.5 ms | 139 |
| | **SLPCE14-1390** | **SLPCR14-1390** | **SLPCP14-1390** | Integral Removable Disconnect (RD) | | |
| 1530 mm * | **SLPCE14-1530P8** | **SLPCR14-1530P8** | **SLPCP14-1530P88** | 300 mm (1 ft) PVC-jacketed cable with an 8-pin M12 male quick-disconnect connector | 37.5 ms | 153 |
| | **SLPCE14-1530** | **SLPCR14-1530** | **SLPCP14-1530** | Integral Removable Disconnect (RD) | | |
| 1670 mm * | **SLPCE14-1670P8** | **SLPCR14-1670P8** | **SLPCP14-1670P88** | 300 mm (1 ft) PVC-jacketed cable with an 8-pin M12 male quick-disconnect connector | 40.5 ms | 167 |
| | **SLPCE14-1670** | **SLPCR14-1670** | **SLPCP14-1670** | Integral Removable Disconnect (RD) | | |
| 1810 mm * | **SLPCE14-1810P8** | **SLPCR14-1810P8** | **SLPCP14-1810P88** | 300 mm (1 ft) PVC-jacketed cable with an 8-pin M12 male quick-disconnect connector | 43.5 ms | 181 |
| | **SLPCE14-1810** | **SLPCR14-1810** | **SLPCP14-1810** | Integral Removable Disconnect (RD) | | |

* Lengths longer than 1250 mm are no longer available.

For other models:

- **Anodized aluminum housing:** Prior to the connection designation (if any) in the model number, add “A” for a clear (brushed) anodized aluminum finish and black endcaps (for example, **SLPCE14-410A**). Pigtail QD models (for example, **SLPCE14-410AP8**) have black PVC cable and QD overmold.
- ESD-safe models: Prior to the connection designation (if any) in the model number, add “N” for a nickel plated housing and endcaps (for example, **SLPCE14-410N**). Pigtail QD models (for example, **SLPCE14-410NP8**) have black PVC cable and QD overmold.

- Cabled QD models require mating cordsets with an 8-pin M12 connector (such as **QDE-8..D**, **DEE2R-8..D**, or **CSB-M128..M1281**; see "Cordsets" on page 79).
- Integral RD models require mating cordsets with a removable disconnect connector (such as **RDLP-8..D**, **DELPE-8..D**, or **DELPE-11..D**; see "Cordsets" on page 79).

## 10.3 Cascadeable Emitter and Receiver Models—25 mm Resolution

Only standard yellow housing models are listed. Cabled QD models (for example, **SLPCE25-410P8**) have yellow PVC cable and black PVC QD overmold. For other models, see below.

See www.bannerengineering.com or contact Banner Engineering for kit model numbering scheme.


© Banner Engineering Corp. All rights reserved.

Order one machine interface cordset for each emitter or receiver; see "Cordsets" on page 79. For interconnections between cascaded emitters and receivers, use DELP.. series double-ended cordsets.

| Defined Area | Models | | | Connection | Response Time | # Beams |
|---|---|---|---|---|---|---|
| | Emitter | Receiver | Pair[1] | | | |
| 410 mm | **SLPCE25-410P8** | **SLPCR25-410P8** | **SLPCP25-410P88** | 300 mm (1 ft) PVC-jacketed cable with an 8-pin M12 male quick-disconnect connector | 9.5 ms | 21 |
| | **SLPCE25-410** | **SLPCR25-410** | **SLPCP25-410** | Integral Removable Disconnect (RD) | | |
| 550 mm | **SLPCE25-550P8** | **SLPCR25-550P8** | **SLPCP25-550P88** | 300 mm (1 ft) PVC-jacketed cable with an 8-pin M12 male quick-disconnect connector | 11 ms | 28 |
| | **SLPCE25-550** | **SLPCR25-550** | **SLPCP25-550** | Integral Removable Disconnect (RD) | | |
| 690 mm | **SLPCE25-690P8** | **SLPCR25-690P8** | **SLPCP25-690P88** | 300 mm (1 ft) PVC-jacketed cable with an 8-pin M12 male quick-disconnect connector | 12.5 ms | 35 |
| | **SLPCE25-690** | **SLPCR25-690** | **SLPCP25-690** | Integral Removable Disconnect (RD) | | |
| 830 mm | **SLPCE25-830P8** | **SLPCR25-830P8** | **SLPCP25-830P88** | 300 mm (1 ft) PVC-jacketed cable with an 8-pin M12 male quick-disconnect connector | 14 ms | 42 |
| | **SLPCE25-830** | **SLPCR25-830** | **SLPCP25-830** | Integral Removable Disconnect (RD) | | |
| 970 mm | **SLPCE25-970P8** | **SLPCR25-970P8** | **SLPCP25-970P88** | 300 mm (1 ft) PVC-jacketed cable with an 8-pin M12 male quick-disconnect connector | 15.5 ms | 49 |
| | **SLPCE25-970** | **SLPCR25-970** | **SLPCP25-970** | Integral Removable Disconnect (RD) | | |
| 1110 mm | **SLPCE25-1110P8** | **SLPCR25-1110P8** | **SLPCP25-1110P88** | 300 mm (1 ft) PVC-jacketed cable with an 8-pin M12 male quick-disconnect connector | 17 ms | 56 |
| | **SLPCE25-1110** | **SLPCR25-1110** | **SLPCP25-1110** | Integral Removable Disconnect (RD) | | |
| 1250 mm | **SLPCE25-1250P8** | **SLPCR25-1250P8** | **SLPCP25-1250P88** | 300 mm (1 ft) PVC-jacketed cable with an 8-pin M12 male quick-disconnect connector | 18.5 ms | 63 |
| | **SLPCE25-1250** | **SLPCR25-1250** | **SLPCP25-1250** | Integral Removable Disconnect (RD) | | |
| 1390 mm * | **SLPCE25-1390P8** | **SLPCR25-1390P8** | **SLPCP25-1390P88** | 300 mm (1 ft) PVC-jacketed cable with an 8-pin M12 male quick-disconnect connector | 20 ms | 70 |
| | **SLPCE25-1390** | **SLPCR25-1390** | **SLPCP25-1390** | Integral Removable Disconnect (RD) | | |
| 1530 mm * | **SLPCE25-1530P8** | **SLPCR25-1530P8** | **SLPCP25-1530P88** | 300 mm (1 ft) PVC-jacketed cable with an 8-pin M12 male quick-disconnect connector | 21 ms | 77 |
| | **SLPCE25-1530** | **SLPCR25-1530** | **SLPCP25-1530** | Integral Removable Disconnect (RD) | | |
| 1670 mm * | **SLPCE25-1670P8** | **SLPCR25-1670P8** | **SLPCP25-1670P88** | 300 mm (1 ft) PVC-jacketed cable with an 8-pin M12 male quick-disconnect connector | 22.5 ms | 84 |
| | **SLPCE25-1670** | **SLPCR25-1670** | **SLPCP25-1670** | Integral Removable Disconnect (RD) | | |
| 1810 mm * | **SLPCE25-1810P8** | **SLPCR25-1810P8** | **SLPCP25-1810P88** | 300 mm (1 ft) PVC-jacketed cable with an 8-pin M12 male quick-disconnect connector | 24 ms | 91 |
| | **SLPCE25-1810** | **SLPCR25-1810** | **SLPCP25-1810** | Integral Removable Disconnect (RD) | | |

* Lengths longer than 1250 mm are no longer available.

For other models:

- Anodized aluminum housing: Prior to the connection designation (if any) in the model number, add “A” for a clear (brushed) anodized aluminum finish and black endcaps (for example, **SLPCE25-410AP8**). Pigtail QD models (for example, **SLPCE25-410AP8**) have black PVC cable and QD overmold.
- ESD-safe models: Prior to the connection designation (if any) in the model number, add “N” for a nickel plated housing and endcaps (for example, **SLPCE25-410NP8**). Pigtail QD models (for example, **SLPCE25-410NP8**) have black PVC cable and QD overmold.

[1] A pair includes an emitter and a receiver


© Banner Engineering Corp. All rights reserved.

- Cabled QD models require mating cordsets with an 8-pin M12 connector (such as **QDE-8..D**, **DEE2R-8..D**, or **CSB-M128..M1281**; see "Cordsets" on page 79).
- Integral RD models require mating cordsets with a removable disconnect connector (such as **RDLP-8..D**, **DELPE-8..D**, or **DELPE-11..D**; see "Cordsets" on page 79).

# 10.4 Determining Interconnect Cordset Lengths

The following cordset length charts are possible combinations for each side of example cascaded systems. Model DELP-..E cordsets are used for calculations. Other lengths and combinations are possible; call Banner Engineering for assistance.

*Figure 52. Cascade Cordset Connection Schemes*

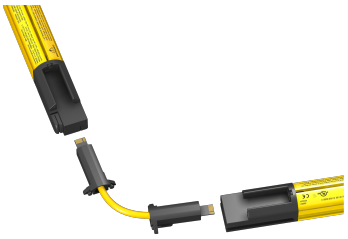

Standard Connection DELP-8..D cordset

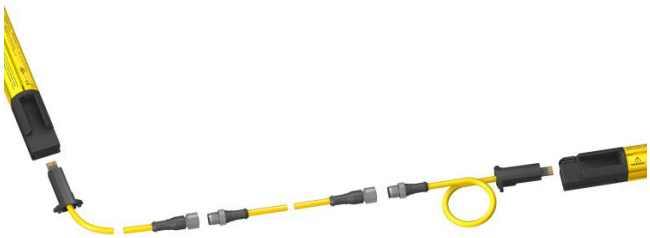

Optional Connection: DELPEF-81D cordset / DEE2R-8..D cordset (optional) / DELPE-8..D (or P8 models)

As the machine interface cordset lengthens, the voltage available at the first (master) sensor pair decreases, which results in shorter possible interconnect cordsets to maintain supply voltage requirements at last cascaded sensor. Due to the large number of possible combinations, the table for four cascaded light screens cordset options includes only applications in which L2 = L4. A common installation is one that protects two areas of a machine, for example, the front and back of a power press, and uses four EZ-SCREEN LP pairs to create two L-shaped sensing fields.

*Table 16. Cordset length options for two cascaded light screens (example cordset pairing per side of cascaded system)*

| Machine Interface Cordset (L1) QDE-8..D or RDLP-8..D | | 0.9 m (3 ft) | 4.6 m (15 ft) | 7.6 m (25 ft) | 15.2 m (50 ft) |
|---|---|---|---|---|---|
| Sensor Interconnect Cordset Lengths (L2) | Max. L2 (1) | 58.2 m (191 ft) | 47.5 m (156 ft) | 38.4 m (126 ft) | 16.2 m (53 ft) |
| | Individual DELP-..E Cordsets | 30.5 m (100 ft) | 30.5 m (100 ft) | 30.5 m (100 ft) | – |
| | | 22.9 m (75 ft) | 22.9 m (75 ft) | 22.9 m (75 ft) | – |
| | | 15.2 m (50 ft) | 15.2 m (50 ft) | 15.2 m (50 ft) | 15.2 m (50 ft) |
| | | 7.6 m (25 ft) | 7.6 m (25 ft) | 7.6 m (25 ft) | 7.6 m (25 ft) |
| | | 4.6 m (15 ft) | 4.6 m (15 ft) | 4.6 m (15 ft) | 4.6 m (15 ft) |
| | | 2.4 m (8 ft) | 2.4 m (8 ft) | 2.4 m (8 ft) | 2.4 m (8 ft) |
| | | 0.9 m (3 ft) | 0.9 m (3 ft) | 0.9 m (3 ft) | 0.9 m (3 ft) |
| | | 0.3 m (1 ft) | 0.3 m (1 ft) | 0.3 m (1 ft) | 0.3 m (1 ft) |
| | | 0.1 m (0.33 ft) | 0.1 m (0.33 ft) | 0.1 m (0.33 ft) | 0.1 m (0.33 ft) |

*Table 17. Cordset length options for three cascaded light screens (example cordset pairing per side of cascaded system)*

| Machine Interface Cordset (L1) QDE-8..D or RDLP-8..D | | 0.9 m (3 ft) | | 4.6 m (15 ft) | | 7.6 m (25 ft) | | 15.2 m (50 ft) | |
|---|---|---|---|---|---|---|---|---|---|
| | | L2 | L3 | L2 | L3 | L2 | L3 | L2 | L3 |
| Sensor Interconnect Cordset Lengths (L2, L3) | Max. L2 (2) | 28.7 m (94 ft) | 0.3 m (1 ft) | 22.3 m (73 ft) | 0.3 m (1 ft) | 16.8 m (55 ft) | 0.3 m (1 ft) | 3 m (10 ft) | 0.3 m (1 ft) |
| | Max. L3 (3) | 0.3 m(1 ft) | 57.0 m (187 ft) | 0.3 m (1 ft) | 43.9 m (144 ft) | 0.3 m (1 ft) | 32.9 m (108 ft) | 0.3 m (1 ft) | 5.8 m (19 ft) |
| | Individual DELP-..E Cordsets | 22.9 m (75 ft) | 7.6 m (25 ft) | - | - | - | - | - | - |
| | | 15.2 m (50 ft) | 22.9 m (75 ft) | 15.2 m (50 ft) | 15.2 m (50 ft | 15.2 m (50 ft) | 2.4 m (8 ft) | - | - |
| | | 7.6 m (25 ft) | 30.5 m (100 ft) | 7.6 m (25 ft) | 22.9 m (75 ft) | 7.6 m (25 ft) | 15.2 m (50 ft) | - | - |
| | | 4.6 m (15 ft) | 30.5 m (100 ft) | 4.6 m (15 ft) | 30.5 m (100 ft) | 4.6 m (15 ft) | 22.9 m (75 ft) | - | - |
| | | 2.4 m (8 ft) | 30.5 m (100 ft) | 2.4 m (8 ft) | 30.5 m (100 ft) | 2.4 m (8 ft) | 22.9 m (75 ft) | 2.4 m (8 ft) | 0.9 m (3 ft) |
| | | 0.9 m (3 ft) | 30.5 m (100 ft) 0.9 | 0.9 m (3 ft) | 30.5 m (100 ft) | 0.9 m (3 ft) | 30.5 m (100 ft) | 0.9 m (3 ft) | 4.6 m (15 ft) |
| | | 0.3 m (1 ft) | 30.5 m (100 ft) | 0.3 m (1 ft) | 30.5 m (100 ft) | 0.3 m (1 ft) | 30.5 m (100 ft) | 0.3 m (1 ft) | 4.6 m (15 ft) |

Continued on page 95

(1) Multiple DELP..-.. cordsets may be required.
(2) Multiple DELP..-.. cordsets may be required.
(3) Multiple DELP..-.. cordsets may be required.


© Banner Engineering Corp. All rights reserved.

Continued from page 94

| Machine Interface Cordset (L1) QDE-8..D or RDLP-8..D | | 0.9 m (3 ft) | | 4.6 m (15 ft) | | 7.6 m (25 ft) | | 15.2 m (50 ft) | |
|---|---|---|---|---|---|---|---|---|---|
| | | L2 | L3 | L2 | L3 | L2 | L3 | L2 | L3 |
| | | 0.1 m (0.33 ft) | 30.5 m (100 ft) | 0.1 m (0.33 ft) | 30.5 m (100 ft) | 0.1 m (0.33 ft) | 30.5 m (100 ft) | 0.1 m (0.33 ft) | 4.6 m (15 ft) |

*Table 18. Cordset length options for four cascaded light screens (example cordset pairing per side of cascaded system)*

| Machine Interface Cordset (L1) QDE-8..D or RDLP-8..D | | 0.9 m (3 ft) | | | 4.6 m (15 ft) | | | 7.6 m (25 ft) | | |
|---|---|---|---|---|---|---|---|---|---|---|
| | | L2 | L3 | L4 | L2 | L3 | L4 | L2 | L3 | L4 |
| Sensor Interconnect Cordset Lengths (L2, L3, and L4) | Max. L3 [1] | 0.3 m (1 ft) | 28 m (92 ft) | 0.3 m (1 ft) | 0.3 m (1 ft) | 20.4 m (67 ft) | 0.3 m (1 ft) | 0.3 m (1 ft) | 13.7 m (45 ft) | 0.3 m (1 ft) |
| | Individual DELP-..E Cordsets | 15.2 m (50 ft) | 0.9 m (3 ft) | 15.2 m (50 ft) | - | - | - | - | - | - |
| | | 7.6 m (25 ft) | 15.2 m (50 ft) | 7.6 m (25 ft) | 7.6 m (25 ft) | 7.6 m (25 ft) | 7.6 m (25 ft) | 7.6 m (25 ft) | 0.9 m (3 ft) | 7.6 m (25 ft) |
| | | 4.6 m (15 ft) | 15.2 m (50 ft) | 4.6 m (15 ft) | 4.6 m (15 ft) | 7.6 m (25 ft) | 4.6 m (15 ft) | 4.6 m (15 ft) | 4.6 m (15 ft) | 4.6 m (15 ft) |
| | | 2.4 m (8 ft) | 22.9 m (75 ft) | 2.4 m (8 ft) | 2.4 m (8 ft) | 15.2 m (50 ft) | 2.4 m (8 ft) | 2.4 m (8 ft) | 7.6 m (25 ft) | 2.4 m (8 ft) |
| | | 0.9 m (3 ft) | 22.9 m (75 ft) | 0.9 m (3 ft) | 0.9 m (3 ft) | 15.2 m (50 ft) | 0.9 m (3 ft) | 0.9 m (3 ft) | 7.6 m (25 ft) | 0.9 m (3 ft) |
| | | 0.3 m (1 ft) | 22.9 m (75 ft) | 0.3 m (1 ft) | 0.3 m (1 ft) | 15.2 m (50 ft) | 0.3 m (1 ft) | 0.3 m (1 ft) | 7.6 m (25 ft) | 0.3 m (1 ft) |
| | | 0.1 m (0.33 ft) | 22.9 m (75 ft) | 0.1 m (0.33 ft) | 0.1 m (0.33 ft) | 15.2 m (50 ft) | 0.1 m (0.33 ft) | 0.1 m (0.33 ft) | 7.6 m (25 ft) | 0.1 m (0.33 ft) |

## 10.5 Cordset examples for two cascaded light screens

**Example 1:**

Machine Interface Cordset (L1): 4.6 m (15 ft)

Sensor Interconnect Cordset (L2): 45.7 m (150 ft), using one 30.5 m (100 ft) and one 15.2 m (50 ft) DELP..-.. cordset, or 30.5 m (100 ft) or shorter using single cordsets

**Example 2:**

Machine Interface Cordset (L1): 15.2 m (50 ft)

Sensor Interconnect Cordset (L2): 16.2 m (53 ft) or shorter

## 10.6 Cordset examples for three cascaded light screens

**Example 1:**

Machine Interface Cordset (L1): 0.9 m (3 ft)

Sensor Interconnect Cordset (L2): 22.9 m (75 ft)

Sensor Interconnect Cordset (L3): 7.6 m (25 ft) or shorter

**Example 2:**

Machine Interface Cordset (L1): 4.6 m (15 ft)

Sensor Interconnect Cordset (L2): 7.6 m (25 ft)

Sensor Interconnect Cordset (L3): 22.9 m (75 ft) or shorter

[1] Multiple DELP..-.. cordsets may be required.


© Banner Engineering Corp. All rights reserved.

### 10.7 Cordset examples for four cascaded light screens

**Example 1:**

Machine Interface Cordset (L1): 4.6 m (15 ft
Sensor Interconnect Cordset (L2): 0.3 m (1 ft)
Sensor Interconnect Cordset (L3): 15.2 m (50 ft) or shorter
Sensor Interconnect Cordset (L4): 0.3 m (1 ft)

**Example 2:**

Machine Interface Cordset (L1): 4.6 m (15 ft)
Sensor Interconnect Cordset (L2): 0.9 m (3 ft)
Sensor Interconnect Cordset (L3): 15.2 m (50 ft) or shorter
Sensor Interconnect Cordset (L4): 0.9 m (3 ft)

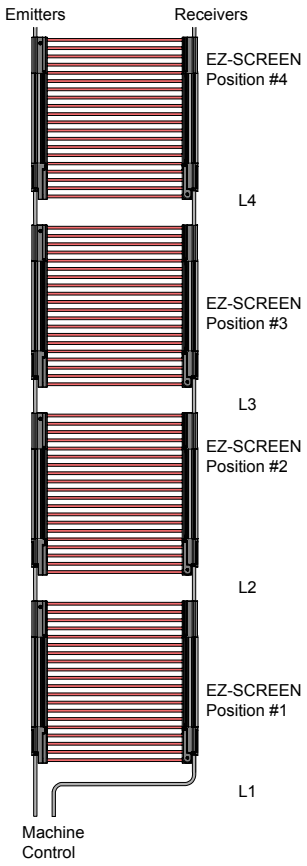


## 10.8 Response Time for Cascaded Light Screens

Response time is an important factor in determining a light screen's safety distance (minimum distance). For cascaded EZ-SCREEN LP systems, that response time is dependent on the number of light screens, the number of beams in the light screens, and their positions in the cascade. It can be calculated easily, in two ways:

- Based on the worst-case time for the entire cascade (where all light screens in the cascade have the same safety distance)
- Individually for each light screen in the cascade (safety distance is calculated for each light screen in the cascade)

**WARNING:**

- **Properly install the device**
- Failure to follow the installation instructions can result in ineffective or non-operation of the Banner Engineering Corp. device, which could create an unsafe condition resulting in serious injury or death.
- Follow all installation instructions.

### 10.8.1 Individual Response Time and Safety (Minimum) Distance

When calculating individual safety distance (minimum distance) for each emitter/receiver pair, the pair's position in the cascade impacts its response time, which then impacts its safety distance (see safety distance formulas in "Calculating the Safety Distance (Minimum Distance)" on page 19). The individual method results in the closest possible safety distance for each light screen in the cascade, while ensuring that each sensor pair is located at an adequate distance from the hazard.


© Banner Engineering Corp. All rights reserved.

The response time depends on how far the light screen is from the machine control. Each light screen position in the cascade, starting from the first light screen in the cascade, increases the light screen's response time by 2 ms.

"Figure: Calculating the individual response times of four cascaded safety light screens, each 550 mm long, with 25 mm resolution " on page 98 depicts a four-pair cascade. The 25 mm resolution, 550 mm EZ-SCREEN LP emitter/receiver pairs each begin with a response time of 11 ms. The pair in position #1 (connected directly to the machine control), maintains its 11 ms response time. Response time for the second pair in the cascade circuit increases by 2 ms, to 13 ms; for the third pair by 4 ms, to 15 ms, and for the fourth pair by 6 ms, to 17 ms. To calculate response time (Tr) for individual placement of each emitter/ receiver pair in the cascaded system use the following formulas:

**Position #1: $Tr_{(cascade1)} = Tr$**

**Position #2: $Tr_{(cascade2)} = Tr + 2$ ms**

**Position #3: $Tr_{(cascade3)} = Tr + 4$ ms**

**Position #4: $Tr_{(cascade4)} = Tr + 6$ ms**

See "Cascadeable Emitter and Receiver Models—14 mm Resolution" on page 91 and "Cascadeable Emitter and Receiver Models—25 mm Resolution" on page 92 for listed response times.


© Banner Engineering Corp. All rights reserved.

*Figure 53. Calculating the individual response times of four cascaded safety light screens, each 550 mm long, with 25 mm resolution*

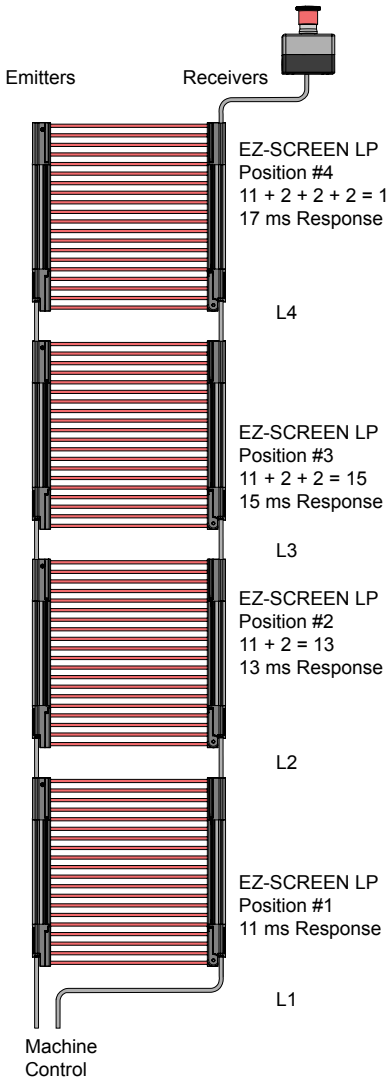


CSSI Response Time = 40 ms + [(4 – 1) × 2 ms] = 46 ms

EZ-SCREEN LP Cascade Overall System Response (for system as shown)[1]

```
11 + [(4 – 1) × 2 ms] = 11 + 6 = 17 ms response
```

## 10.8.2 Overall Response Time and Safety (Minimum) Distance

The cascaded system's Overall Response Time (Tr) is equal to the response time of the individual sensor pair with the most beams (the slowest individual response time), plus an adder resulting from the number of systems in the cascade. Tr can be found by the following formula:

$$Tr = Tr_{(max)} + [(N-1) \times 2\ ms]$$

where:

**$Tr_{(max)}$** is the response time of the slowest individual pair in the cascade (the pair with the most beams; see "Components" on page 11).
**N** is the number of sensor pairs in the cascade.

[1] Light screens of other lengths/resolutions will have different response times.


© Banner Engineering Corp. All rights reserved.

Use Tr value from the formula in "Calculating the Safety Distance (Minimum Distance)" on page 19 to determine Overall Safety Distance (Ds). This will ensure that all sensor pairs will be located at an adequate distance from the hazard, no matter how the system is installed.

When contacts, for example, an E-stop button, are connected to a cascaded receiver, the CSSI response time is 40 ms plus the 2 ms adder for each additional light screen, similar to the defined area Tr.

$$Tr_{(CSSI)} = 40 \text{ ms} + [(N-1) \times 2 \text{ ms}]$$

## 10.8.3 Cascade Configuration vs. Response Time

When light screens of different lengths or different resolutions (and, therefore, different response times) are used in one circuit, their positions in the cascade may become a consideration.

For example, consider the light screen circuits depicted in "Figure: Calculating response times for a three-light screen cascade—both Individual and Overall methods" on page 99. Each example contains three safety light screens, one 1810 mm long (with a response time of 43.5 ms), and two 410 mm long (13.5 ms response each). Depending on their placement in the cascade, the individual response time for the same three light screens can vary.

*Figure 54. Calculating response times for a three-light screen cascade—both Individual and Overall methods*

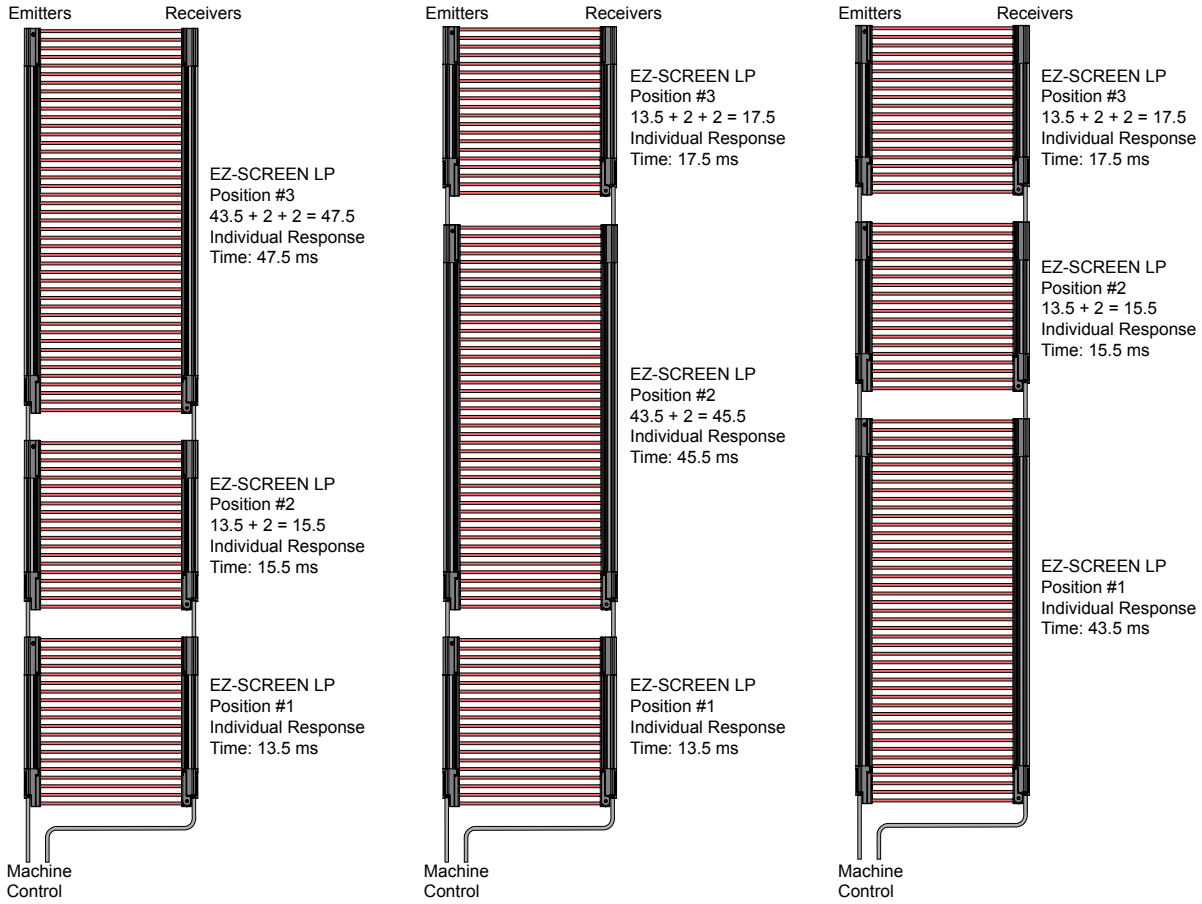


System Overall Response Time for all systems shown here is

$$43.5 + [(3 - 1) \times 2 \text{ ms}] = 47.5 \text{ ms}$$

## 10.8.4 Simplified Method for Determining Response Time

If the safety distance does not need to be optimized (at a minimum), simply add 6 ms to the response time of the receiver with the greatest number of beams (worst case Tr), and use that number as the overall response time. The 6 ms adder increases safety distance a total of 10 mm (0.4 in) when using 1600 mm/s for the hand speed constant K (see "Calculating the Safety Distance (Minimum Distance)" on page 19).


© Banner Engineering Corp. All rights reserved.

$$Tr = Tr_{(max)} + 6\ ms$$

## 10.9 Cascaded Sensor Configuration Settings

Setting cascaded sensors for scan code, trip or latch output, external device monitoring (EDM), reduced resolution, fixed blanking and inverted display is identical to the procedure for non-cascadeable emitters and receivers (see "System Operation" on page 61).

Scan codes for each emitter and receiver pair must match. However, for cascaded installations, scan codes must alternate on adjacent systems as described in "Installation of Multiple Systems" on page 28, "Mounting the Optional LPA-MBK-10 End-Mount Brackets" on page 30, and "Mounting the LPA-MBK-12 Side-Mount Brackets" on page 32.

**WARNING:**

- **Use a scan code**
- If you do not use a scan code, a receiver can synchronize to the signal from the wrong emitter, reducing the safety function of the light curtain and creating an unsafe condition that could result in serious injury or death.
- Configure adjacent systems to use different scan codes (for example, set one system to use scan code 1 and the other system to use scan code 2). Perform a trip test to confirm the light curtain function.

While the scan code, reduced resolution, fixed blanking, and inverted display settings are independent for each cascaded sensor pair, the trip/latch mode and EDM settings must be determined by the first receiver in the cascade (closest to the machine interface), which controls the OSSD outputs. All other receivers in the cascade must be set for trip mode and 2-channel EDM (factory default settings).

The settings on the first receiver then determine trip or latch mode and 1- or 2-channel EDM/aux. output, and this is the only receiver that requires a reset following a latch condition.

### 10.9.1 Fixed Blanking

One or more areas within any cascaded EZ-SCREEN LP sensor pair can be blanked out, just as with other EZ-SCREEN LP light screens. Blanking for each sensor pair within a cascade, if required, must be programmed separately. See "Configure Fixed Blanking" on page 45 for more information and programming procedure.

For cascadeable models only: a standalone receiver or the last receiver in a cascade may be configured remotely for fixed blanking, using an **EZA-RBK-1** remote key switch box or other options as described in "Remote Fixed Blanking" on page 106.

## 10.10 Configuration for Cascaded Operation

Each cascaded system must be configured, before it can be run in a production environment.

Before configuration, install all emitters and receivers according to "Mechanical Installation" on page 19 and "Cascade" on page 90. The last SLPCR-.. receiver must be terminated either with a terminator plug, or with an **EZA-RBK-1** remote key switch box, or by connecting two closed mechanical contacts (see "Emergency Stop Buttons in Cascaded Systems" on page 101 and "Interlock Switches in Cascaded Systems" on page 103).

Perform the following procedure on the first receiver only in the cascade (closest to the machine interface). Other than scan code, set all other receivers in the cascade to the factory default positions.

1. From either normal operation or a power OFF condition, set the first and fourth DIP switches (T/L and Red Res) both to the left (Trip operation and Reduced Resolution enabled positions).


© Banner Engineering Corp. All rights reserved.

*Figure 55. DIP switch configuration to enable cascade installation*




2. Set the second and third DIP switches (Red Res and T/L) both to the right (Reduced Resolution OFF and Latch operation positions).
3. The receiver should be in a lockout condition or power OFF.
   **If power is OFF:** Apply power

   **Lockout condition:** Perform a valid reset sequence (close the reset switch for 0.25 to 2 seconds, then reopen).
4. Coming out of lockout or during startup, the DIP switch configuration will be recognized as Cascaded Teach Mode, indicated by the following:
   - The first receiver display sequentially shows

     No E-stop connected: “4C,” “3C,” or “2C”
     E-stop w/closed contacts: “4CE,” “3CE,” or “2CE”
     E-stop w/open contacts: “4CO,” “3CO” or “2CO”
   - The last cascaded receiver display sequentially shows

     Terminator connected: “1C”
     E-stop w/closed contacts: “1CE”
     E-stop w/open contacts: “1CO”
   - Other receivers sequentially display “1C”
   - All receiver Zone indicators OFF
   - All receiver Yellow Reset indicators OFF
   - All receiver Status indicators solid red
5. To enable and exit Cascade Teach Mode, reconfigure DIP switches for normal operation.
6. Perform a valid reset sequence (see Step 3), or cycle power.

**NOTE:** If the EDM wiring does not match the switch position, an EDM error occurs and cascade configuration will not be allowed.

## 10.11 Emergency Stop Buttons in Cascaded Systems

Cascadeable EZ-SCREEN LP receivers may be connected to one or more E-stop buttons. The button(s) must connect to the end of the last receiver in the cascade, in place of the terminator plug. The connected E-stop button(s) will activate/deactivate the OSSD outputs in all receivers in the cascade.

The number of E-stop buttons allowed in a series connection is limited by the total resistance per channel. The total resistance is the sum of all contact resistance values in the channel, plus the total wire resistance in the channel. The maximum total resistance per channel is 100 Ω.

**NOTE:** The simultaneity between the two E-stop contacts, on opening and closing, is 3 seconds. If simultaneity is not met on either opening or closing, the last receiver’s display will flash . If simultaneity is not met on opening, the closed contact can be opened later (after more than 3 seconds), then both contacts must be closed again.


© Banner Engineering Corp. All rights reserved.

**WARNING:**
- **Do not mute or bypass any emergency stop device**
- Muting or bypassing the safety outputs renders the emergency stop function ineffective.
- ANSI B11.19, NFPA 79 and IEC/EN 60204-1 require that the emergency stop function remains active at all times.

### 10.11.1 Emergency-Stop Switch Requirements (Positive-Opening)

As shown below, the e-stop switch must provide two contact pairs, which are closed when the switch is in the armed position. Once activated, the e-stop switch must open its contacts and return to the closed-contact position only after deliberate action (such as twisting, pulling, or unlocking). The switch should be a positive-opening type, as described by IEC947-5-1. A mechanical force applied to such a button (or switch) is transmitted directly to the contacts, forcing them open. This ensures that the switch contacts will open whenever the switch is activated. NFPA 79 specifies the following additional requirements:

- Emergency Stop push buttons shall be located at each operator control station and at other operating stations where emergency shutdown shall be required
- Stop and Emergency Stop push buttons shall be continuously operable from all control and operating stations where located
- Actuators of Emergency Stop devices shall be colored Red. The background immediately around the device actuator shall be colored Yellow. The actuator of a push-button-operated device shall be of the palm or mushroom-head type
- The Emergency Stop actuator shall be a self-latching type

**NOTE:** Some applications may have additional requirements. The user must comply with all relevant regulations.

**WARNING: Multiple Emergency Stop Switches**
When two or more E-stop switches are connected to the same EZ-SCREEN LP Low-Profile Safety Light Curtain receiver, the contacts of the E-stop switches must be connected together in series. This series combination is then wired to the respective EZ-SCREEN LP Low-Profile Safety Light Curtain receiver input.

Do not connect the contacts of multiple E-stop switches in parallel to the EZ-SCREEN LP Low-Profile Safety Light Curtain inputs; this defeats the switch contact monitoring ability of the EZ-SCREEN LP Low-Profile Safety Light Curtain light curtain, and creates an unsafe condition that could result in serious bodily injury or death.

In addition, when two or more E-stop switches are used, each switch must be individually actuated (engaged), then re-armed and reset the machine's safety-related control system. This allows the monitoring circuits to check each switch and its wiring to detect faults. Failure to test each switch individually in this manner could result in undetected faults and create an unsafe condition that could result in serious bodily injury or death.

**WARNING:**
- **Reset routine required**
- Failure to prevent the machine from restarting without actuating the normal start command/device can create an unsafe condition that could result in serious injury or death.
- Do not allow the machine to restart without actuating the normal start command/device. Perform the reset routine after clearing the cause of a stop condition, as required by U.S. and international standards.


© Banner Engineering Corp. All rights reserved.

*Figure 56. Connecting e-stop buttons to the last receiver in the cascade*

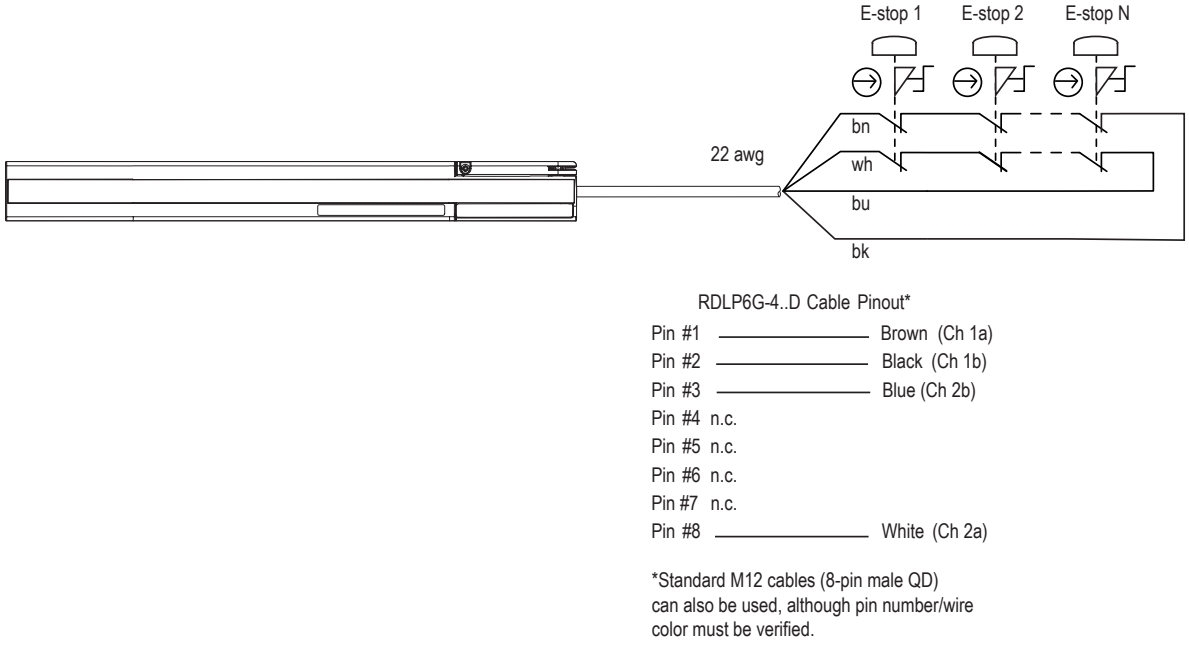


# 10.12 Interlock Switches in Cascaded Systems

The Cascade input may be used to monitor interlock safety gates or guards. Requirements vary widely for the level of control reliability or safety category (per ISO 13849-1) in the application of interlocked guards. While Banner Engineering recommends the highest level of safety in any application, the user is responsible to safely install, operate, and maintain each safety system, and to comply with all relevant laws and regulations. Of the following applications, "Figure: Monitoring two positive-opening safety switches" on page 105 meets or exceeds the requirements for OSHA/ANSI control reliability and Safety Category 4, per ISO 13849-1.

**WARNING:**

- **The hazard must be accessible only through the sensing field**
- Incorrect system installation could result in serious injury or death.
- The installation of the EZ-SCREEN LP must prevent any individual from reaching around, under, over or through the defined area and into the hazard without being detected.
- See OSHA CFR 1910.217, ANSI B11.19, and/or ISO 14119, ISO 14120 and ISO 13857 for information on determining safety distances and safe opening sizes for your guarding device. Mechanical barriers (for example, hard (fixed) guarding) or supplemental safeguarding might be required to comply with these requirements.

## 10.12.1 Interlock Guarding Requirements

The following general requirements and considerations apply to the installation of interlocked gates and guards for the purpose of safeguarding. Refer to the relevant regulations to be sure to comply with all necessary requirements.

Hazards guarded by the interlocked guard must be prevented from operating until the guard is closed. A Stop command must be issued to the guarded machine if the guard opens while the hazard is present. Closing the guard must not, by itself, initiate hazardous motion; a separate procedure must be required to initiate the motion. The safety switches must not be used as a mechanical or end-of-travel stop.

The guard must be located at an adequate distance from the danger zone (so the hazard has time to stop before the guard is opened sufficiently to provide access to the hazard), and it must open either laterally or away from the hazard, not into the safeguarded area. Depending on the application, an interlocked gate or door should not be able to close by itself and activate the interlocking circuitry. In addition, the installation must prevent personnel from reaching over, under, around, or through the


© Banner Engineering Corp. All rights reserved.

guard to the hazard. Any openings in the guard must not allow access to the hazard (see ANSI B11.19 or the appropriate standard). The guard must be strong enough and designed to protect personnel and contain hazards within the guarded area, which may be ejected, dropped, or emitted by the machine.

The safety switches and actuators used with the cascaded system must be designed and installed so that they cannot be easily defeated. They must be mounted securely, so that their physical position cannot shift, using reliable fasteners that require a tool to remove. Mounting slots in the housings are for initial adjustment only; final mounting holes must be used for permanent location.

### 10.12.2 Positive-Opening Interlocking Safety Switches

Two individually mounted safety interlock switches are recommended for each guard to meet Category 4, per ISO 13849-1, and must satisfy several requirements. Each switch must provide at minimum, one normally closed (N.C.) electrically isolated contact to interface with the Cascade input.

The contacts must be of positive-opening design, with one or more normally closed contacts rated for safety. Positive-opening operation causes the switch to be forced open, without the use of springs, when the switch actuator is disengaged or moved from its home position. In addition, the switches must be mounted in a positive state to move/disengage the actuator from its home position and open the normally closed contact when the guard opens.

Series-connected, positive-opening interlock switch circuits do not meet ISO 13849-1 Category 4 and may not meet Control Reliability requirements because of the potential of an inappropriate reset or a potential loss of the safety stop signal. A multiple connection of this type should not be used in applications where loss of the safety stop signal or an inappropriate reset could lead to serious injury or death.

**WARNING:**

- **Connecting safety switches in series**
- Monitoring multiple guards with a series connection of multiple safety interlock switches is not a Safety Category 4 Application (per ISO 13849-1). A single failure can be masked or not detected at all. The loss of a safety stop signal or an inappropriate reset can lead to serious injury or death.
- When such a configuration is used, procedures must be performed regularly to verify proper operation of each switch. Correct all failures immediately (for example, immediately replace a failed switch).


© Banner Engineering Corp. All rights reserved.

*Figure 57. Monitoring two positive-opening safety switches*

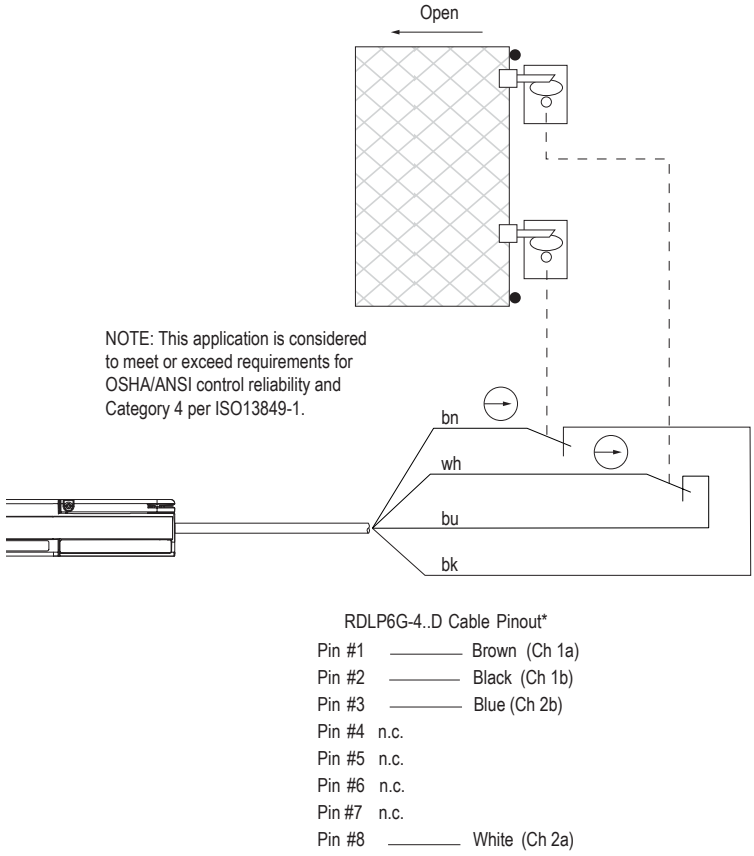


## 10.12.3 Monitoring Series-Connected Positive-Opening Safety Switches

When monitoring two individually mounted safety switches (as shown in "Figure: Monitoring two positive-opening safety switches" on page 105), a faulty switch is detected if it fails to switch as the guard opens. In this case, the EZ-SCREEN LP de-energizes its OSSD output and disable its reset function (locks out) until the input requirements are met (the faulty switch is replaced). However, when a series of interlocking safety switches is monitored by the EZ-SCREEN LP (as shown in "Figure: Monitoring positive-opening safety switches on multiple gates" on page 106), the failure of one switch in the System may be masked or not detected at all.

Series-connected, positive-opening interlock switch circuits do not meet ISO 13849-1 Category 4 and may not meet Control Reliability requirements because of the potential of an inappropriate reset or a potential loss of the safety stop signal. A multiple connection of this type should not be used in applications where loss of the safety stop signal or an inappropriate reset could lead to serious injury or death. The following two scenarios assume two positive-opening safety switches on each guard:

1. **Masking of a failure.** If a guard is opened but a switch fails to open, the redundant safety switch will open and cause the EZ-SCREEN LP to de-energize its outputs. If the faulty guard is then closed, both cascade input channels also close, but because one channel did not open, the EZ-SCREEN LP will not reset.

   However, if the faulty switch is not replaced and a second working guard is cycled (opening and then closing both of the cascade input channels), the EZ-SCREEN LP considers the failure to be corrected. With the input requirements apparently satisfied, the EZ-SCREEN LP allows a reset. This system is no longer redundant and, if the second switch fails, may result in an unsafe condition (for example, the accumulation of faults results in the loss of the safety function).
2. **Non-detection of a failure.** If a working guard is opened, the EZ-SCREEN LP de-energizes its outputs (a normal response). But if a faulty guard is then opened and closed before the working guard is re-closed, the failure on the faulty guard is not detected. This system also is no longer redundant and may result in a loss of safety if the second safety switch fails to switch when needed.


© Banner Engineering Corp. All rights reserved.

The circuits in either scenario do not inherently comply with the safety standard requirements of detecting single faults and preventing the next cycle. In multiple-guard systems using series connected positive-opening safety switches, it is important to periodically check the functional integrity of each interlocked guard individually. **Operators, maintenance personnel, and others associated with the operation of the machine must be trained to recognize such failures and be instructed to correct them immediately.**

Open and close each guard separately while verifying that the EZ-SCREEN LP outputs operate correctly throughout the check procedure. Follow each gate closure with a manual reset, if needed. If a single contact set (channel) fails, the EZ-SCREEN LP will not enable its reset function. If the EZ-SCREEN LP does not reset, a switch may have failed; that switch must be immediately replaced.

This check must be performed and all faults must be cleared, at a minimum, during periodic checkouts. **If the application cannot exclude these types of failures and such a failure may result in serious injury or death, then the safety switches must not be connected in series.**

*Figure 58. Monitoring positive-opening safety switches on multiple gates*

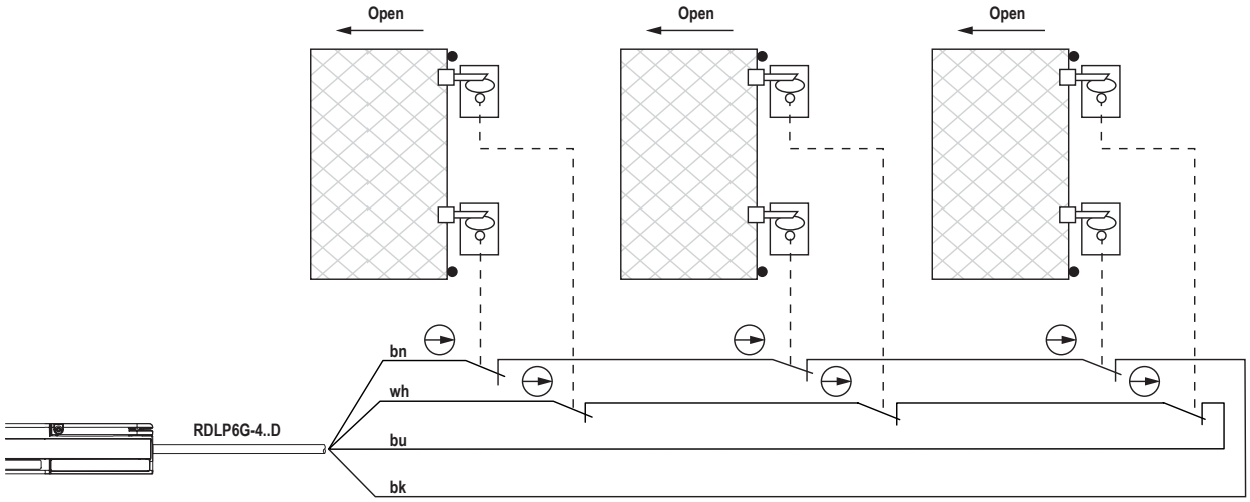


**RDLP6G-4..D Cordset Pinout***
**Brown – Ch 1a**
**White – Ch 2a**
**Blue – Ch 2b**
**Black – Ch 1b**

***Other corset options can also be used.**

**WARNING:**
- This is not a Category 4 application.
- Failure to follow these instructions may result in serious injury or death.
- When monitoring multiple guards with a series connection of multiple safety interlock switches, a single failure may be masked or not detected at all. When such a configuration is used, procedures must be performed regularly to verify proper operation of each switch.

# 10.13 Remote Fixed Blanking

As described in "Fixed Blanking" on page 45, fixed blanking is available to, in effect, “disable” beams that would otherwise be continually blocked by a stationary object. One or multiple areas within an EZ-SCREEN LP sensor pair may be “blanked out,” with a minimum of one beam between two blanked areas. The first sensing beam (synchronization beam) at the display end of sensor must remain clear (cannot be blanked); any other beam may be blanked. All beams of a fixed blanked area must remain blocked during operation in order for the OSSDs to remain ON.

On initial installations of cascadeable emitter/receiver pairs, when they are used as a standalone system, the cascade configuration procedure is not necessary.


© Banner Engineering Corp. All rights reserved.

**WARNING:**

- **Use reduced resolution and fixed blanking only when necessary**
- Failure to follow these instructions could result in serious injury or death.
- Completely fill any holes created in the sensing field with the blanked object or increase the safety (minimum) distance to account for the larger resolution.

The Remote Fixed Blanking feature can be used on an EZ-SCREEN LP cascade receiver as a stand-alone system or as the end (slave) unit in a cascaded system. The remote programming is only effective on that receiver. If fixed blanking is required on other receivers in the cascade string, see "Fixed Blanking" on page 45 for DIP switch configuration information.

## 10.13.1 Programming Key Switch Location

The EZA-RBK-1 or an SPDT (Form C) switch is required to perform the remote programming procedure, as shown. In addition, a normally open (N.O.) reset switch, such as the EZA-RR-1, is generally recommended and is required for systems configured for Latch output. A key-actuated switch provides some supervisory control since the key can be removed from the switch (see "Reset Switch Location" on page 24).

The Programming Key Switch must be:

- Located outside the guarded area
- Located to allow the switch operator full unobstructed view of the entire defined area
- Protected against unauthorized or inadvertent operation

*Figure 59. Connections for use of remote fixed blanking programming*

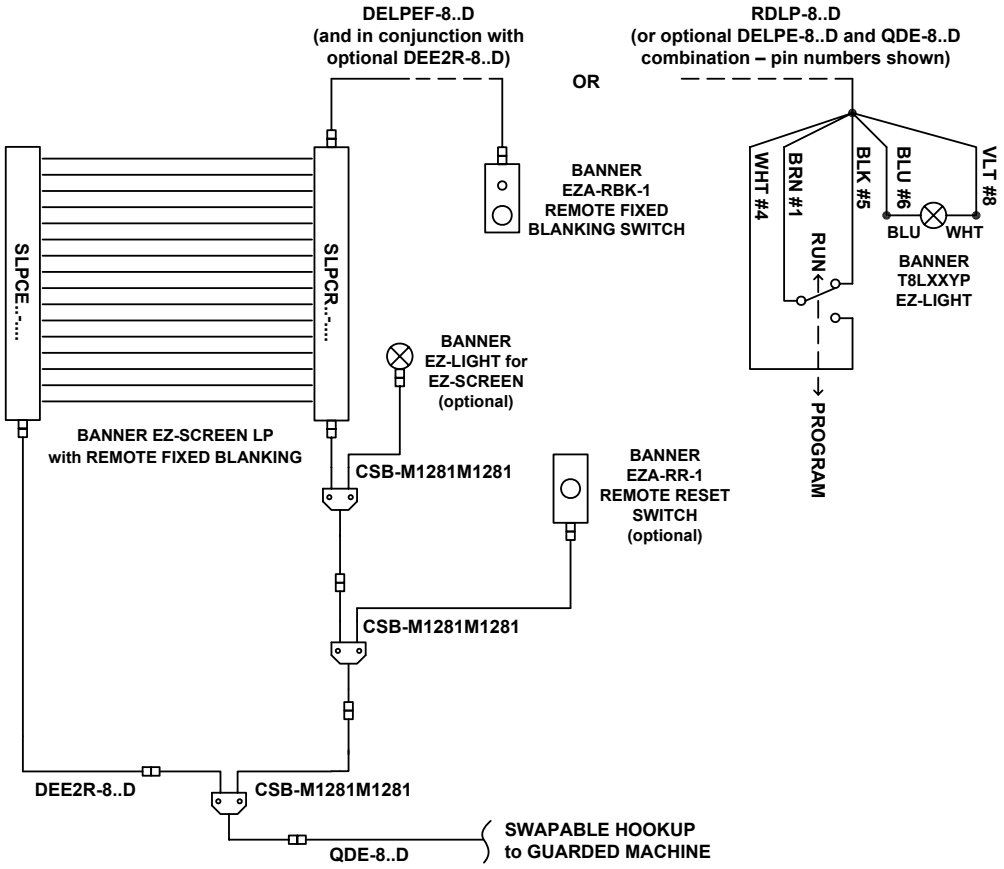


## 10.13.2 Remote Fixed Blanking Programming Procedures

Prior to performing these procedures, install the EZ-SCREEN LP per "Mechanical Installation" on page 19 of this document, including all other DIP switch configuration settings (T/L, RR, and Scan Code). Align the emitter/receiver pair and perform all required checkout procedures to ensure proper operation. Ensure that the EZA-RBK-1 programming key switch is rotated to the counter-clockwise Run position at power-up and normal operation.


© Banner Engineering Corp. All rights reserved.

*Figure 60. EZA-RBK-1 switch positions and programming status indications*

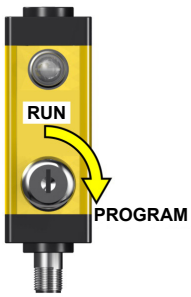


**IMPORTANT:**

1. The first sensing beam (CH1 synchronization beam) at the display end of the sensor must remain clear during normal operation.
2. The number and location of blocked beams is indicated by the receiver's 7-segment display and the zone indicators. If the configuration is reliable, this number should not change.
3. A reset switch (for example, a normally open switch) must be used to complete some programming procedures below.

**Initial programming—no fixed blanking previously programmed, perform the following:** The following procedures must be completed within 10 minutes or a lockout occurs (Error Code 12 displays).

| | Action | Indication | Comments |
|---|---|---|---|
| 1 | Locate the obstruction in the defined area and secure it. | **EZA-RBK-1 LED:** OFF<br>**Receiver:** number and location of blocked beams is indicated by the 7-segment display and the zone indicators. | If the configuration is reliable, this number should not change. |
| 2 | Turn the programming key switch to the Program position (clockwise) momentarily (> 0.25 second) and then return to the Run position. | **EZA-RBK-1 LED:** ON (key in Program position), then slowly flashes for approximately 5 seconds after the key returns to the Run position.<br>**Receiver:** displays "P" "F" "C". | This teaches and saves the new fixed blanking configuration. |
| 3 | **Trip Output:** the OSSDs turn ON.<br>**Latch Output:** After the EZA-RBK-1 indicator turns OFF, a valid reset sequence is required to turn ON the OSSDs. | **EZA-RBK-1 LED:** OFF<br>**Receiver:** display indicates normal operation:<br>• Display: sequentially displays "PFC" (PFC = Program Fixed Blanking Complete)<br>• Zone indicators flash approximate location of fixed blanked area programmed<br>• Reset indicator single-flashing Yellow<br>• Status indicator single-flashing Red | |

**Further programming with the power on—To change (relocate) or clear (remove) previous fixed blanking, perform the following steps:** The following procedures must be completed within 10 minutes or a lockout will occur (Error Code 12 displays).

| | Action | Indication | Comments |
|---|---|---|---|
| 1 | Place the programming key switch in the Program position (clockwise) until step 3. | **EZA-RBK-1 LED:** ON<br>**Receiver:** sequences between "P" "F" "A" and the number of blocked beams. | EZA-RBK-1 indicator steady ON indicates program mode. |
| 2 | Locate or relocate the obstruction (for example, tooling, fixturing, etc.) in the defined area and secure. If clearing the fixed blanked area, remove all obstructions. | **EZA-RBK-1 LED:** ON<br>**Receiver:** display sequences between "P" "F" "A" and the number of blocked beams. | If an Error code 12 occurs (programming time out), go to step 6 below (do not return the programming key switch to the Run position at this time). |
| 3 | Return the programming key switch to the Run position (counter-clockwise). | **EZA-RBK-1 LED:** slowly flashes, approximately 5 seconds<br>**Receiver:** display indicates "P" "F" "C" | This saves the new fixed blanking configuration. |

Continued on page 109


© Banner Engineering Corp. All rights reserved.

Continued from page 108

| Action | | Indication | Comments |
|---|---|---|---|
| 4 | **Trip Output:** The OSSDs turn ON.<br>**Latch Output:** After the EZA-RBK-1 indicator turns OFF, a valid reset sequence is required to turn ON the OSSDs. | **EZA-RBK-1 LED:** OFF<br>**Receiver:** display indicates normal operation if fixed blanking is removed. Otherwise, see<br>• Display: sequentially displays “PFC” (PFC = Program Fixed Blanking Complete)<br>• Zone indicators flash approximate location of fixed blanked area programmed<br>• Reset indicator single-flashing Yellow<br>• Status indicator single-flashing Red | |

### To change (relocate) or clear (remove) previous fixed blanking, when:

- Obstruction is relocated or cleared with EZ-SCREEN LP power OFF.
- Clearing an Error Code 10 “Fixed Blanking Error” (begin at step 5, with the programming key switch in the Run position)
- Clearing an Error Code 12 “Timeout Expired” (begin at step 6, with the programming key switch in the Program position)

| Action | | Indication | Comments |
|---|---|---|---|
| 1 | Remove power from EZ-SCREEN LP. | | |
| 2 | Locate or relocate the obstruction (for example, tooling, fixturing, etc.) in the defined area and secure it, or if clearing the fixed blanked area, remove all obstructions. | | |
| 3 | Reapply power to the EZ-SCREEN LP system. | **EZA-RBK-1:** rapid flashing<br>**Receiver:** Power-up Test Sequence. | All LEDs turn ON momentarily during the Power-up Display Test Sequence. |
| 4 | An Error code 10 is generated when one or more of the currently fixed blanked beams become clear. | **EZA-RBK-1:** OFF<br>**Receiver:** display flashes “1”, “0”, status LED flashes red. | |
| 5 | Place the programming key switch in the Program position (clockwise) until step 8. | **EZA-RBK-1:** OFF<br>**Receiver:** display flashes “1”, “0”, status LED flashes red. | |
| 6 | Perform a valid reset (close the reset switch for 0.25 to 2 seconds, then open it). | **EZA-RBK-1:** rapid flashing, then steady ON<br>**Receiver:** display sequences between “P” “F” “A” and the number of blocked beams. | • EZA-RBK-1 indicator flashes rapidly to indicate the reset is in process.<br>• The timer resets to 10 minutes.<br>• Cascade systems: the first receiver locks out in an Error Code 13. |
| 7 | If necessary, locate or relocate the obstruction (for example, tooling, fixturing, etc.) in the defined area and secure. If clearing the fixed blanked area, remove all obstructions. | **EZA-RBK-1:** steady ON<br>**Receiver:** display sequences between “P” “F” “A” and the number of blocked beams. | If an Error Code 12 occurs (programming time out), repeat step 6 above (do not return the programming key switch to the RUN position). |
| 8 | Return the programming key switch to the Run position (counterclockwise). | **EZA-RBK-1:** slowly flashes for approximately 5 seconds<br>**Receiver:** display indicates “P” “F” “C” | This saves the new fixed blanking configuration. |
| 9a | **Standalone (one sensor pair)**<br><br>**Trip Output:** the OSSDs turn ON.<br><br>**Latch Output:** After the EZA-RBK-1 indicator turns OFF, a valid reset sequence is required. | **EZA-RBK-1:** OFF<br>**Receiver:** display indicates normal operation. | |
| 9b | **Cascade system (multiple connected emitter-receiver pairs),** after the EZA-RBK-1 indicator turns OFF:<br><br>**Trip Output:** Perform a single valid reset, and the OSSDs will turn ON.<br><br>**Latch Output:** Two valid reset sequences are required to turn ON the OSSDs. Pause between the reset actuations to allow the Error code 13 to clear. | **EZA-RBK-1:** OFF<br>**1st Receiver:** Error Code 13.<br><br>**Cascaded Receiver(s):** display indicates normal operation. | • A reset is required to clear the Error Code 13 on the first receiver (the receiver connected to the machine control).<br>• EZA-RBK-1 indicator ON when the reset is actuated (closed) in normal Run mode, flashes rapidly when reset is in process.<br>• **Latch Output:** the second reset is required to clear the latch. |


© Banner Engineering Corp. All rights reserved.

Chapter Contents

11.1 EZS LP Literature ..... 110
11.2 Cleaning ..... 110
11.3 EZS LP Replacement Parts ..... 110
11.4 Warranty Service ..... 111
11.5 Manufacturing Date ..... 111
11.6 Disposal ..... 111
11.7 Banner Engineering Corp Limited Warranty ..... 111
1.3 EU/UK Declaration of Conformity (DoC) ..... 6
11.9 Contact Us ..... 112
11.10 Document Information ..... 112

# Chapter 11 Product Support and Maintenance

## 11.1 EZS LP Literature

The following documentation can be found at www.bannerengineering.com.

| Part Number | Description |
|---|---|
| 140044 | EZ-SCREEN LP System Instruction Manual |
| 140045 | Checkout Procedure Card (Daily)—Stand-Alone Systems |
| 140046 | Checkout Procedure Card (Daily)—Cascaded Systems |
| 140047 | Checkout Procedure Card (Semi-Annual) |
| 147360 | EZ-SCREEN LP Bracket Supplement |

## 11.2 Cleaning

Components are best cleaned using mild detergent or window cleaner and a soft cloth. Avoid cleaners containing alcohol, as they may damage the acrylic lens covers.

## 11.3 EZS LP Replacement Parts

| Model | Description |
|---|---|
| **STP-13** | 14 mm test piece (14 mm resolution systems) |
| **STP-17** | 34 mm test piece (14 mm resolution systems with 2-beam reduced resolution) |
| **STP-16** | 25 mm test piece (25 mm resolution systems) |
| **STP-18** | 65 mm test piece (25 mm resolution systems with 2-beam reduced resolution) |
| **LPA-TP-1** | Terminator plug, for SLPC... emitter or receiver (included with sensor) |
| **DELPE-81D** | Replacement for M12-terminated pigtail QD, as shipped with standard pigtail QD models; 8-conductor cable, 22 AWG; 0.3 m (1 ft) long; see "Cordsets" on page 79 for other lengths |
| **LPA-MBK-11** | End-cap bracket kit (includes 2 end brackets and hardware); 360° sensor rotation; 14 ga (1.9 mm) steel, black zinc plated; die-cast zinc end-cap plate |
| **LPA-MBK-12** | Side-mount bracket kit (includes 1 bracket and hardware); +10º/-30° sensor rotation; 14 ga (1.9 mm) steel, black zinc plated; die-cast zinc clamp |


© Banner Engineering Corp. All rights reserved.

*Figure 61. **LPA-MBK-11** End-cap bracket*



*Figure 62. **LPA-MBK-12** Side-mount bracket*

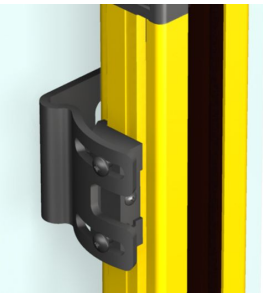

## 11.4 Warranty Service

Contact Banner Engineering for troubleshooting of this device. **Do not attempt any repairs to this Banner device; it contains no field-replaceable parts or components.** If the device, device part, or device component is determined to be defective by a Banner Applications Engineer, they will advise you of Banner's RMA (Return Merchandise Authorization) procedure.

> **IMPORTANT:** If instructed to return the device, pack it with care. Damage that occurs in return shipping is not covered by warranty.

## 11.5 Manufacturing Date

Every EZ-SCREEN LP produced is marked with a code that defines the week and year of manufacture and manufacturing location. The code format (U.S. Standard format) is: **YYWWL**

- YY = Year of manufacture, 2 digits
- WW = Week of manufacture, 2 digits
- L = Banner-specific code, 1 digit

**Example**: 2309H = 2023, Week 9.

## 11.6 Disposal

Devices that are no longer in use should be disposed of according to the applicable national and local regulations.

## 11.7 Banner Engineering Corp Limited Warranty

Banner Engineering Corp. warrants its products to be free from defects in material and workmanship for one year following the date of shipment. Banner Engineering Corp. will repair or replace, free of charge, any product of its manufacture which, at the time it is returned to the factory, is found to have been defective during the warranty period. This warranty does not cover damage or liability for misuse, abuse, or the improper application or installation of the Banner product.

**THIS LIMITED WARRANTY IS EXCLUSIVE AND IN LIEU OF ALL OTHER WARRANTIES WHETHER EXPRESS OR IMPLIED (INCLUDING, WITHOUT LIMITATION, ANY WARRANTY OF MERCHANTABILITY OR FITNESS FOR A PARTICULAR PURPOSE), AND WHETHER ARISING UNDER COURSE OF PERFORMANCE, COURSE OF DEALING OR TRADE USAGE.**

This Warranty is exclusive and limited to repair or, at the discretion of Banner Engineering Corp., replacement. **IN NO EVENT SHALL BANNER ENGINEERING CORP. BE LIABLE TO BUYER OR ANY OTHER PERSON OR ENTITY FOR ANY EXTRA COSTS, EXPENSES, LOSSES, LOSS OF PROFITS, OR ANY INCIDENTAL, CONSEQUENTIAL OR SPECIAL DAMAGES RESULTING FROM ANY PRODUCT DEFECT OR FROM THE USE OR INABILITY TO USE THE PRODUCT, WHETHER ARISING IN CONTRACT OR WARRANTY, STATUTE, TORT, STRICT LIABILITY, NEGLIGENCE, OR OTHERWISE.**

Banner Engineering Corp. reserves the right to change, modify or improve the design of the product without assuming any obligations or liabilities relating to any product previously manufactured by Banner Engineering Corp. Any misuse, abuse, or improper application or installation of this product or use of the product for personal protection applications when the product is identified as not intended for such purposes will void the product warranty. Any modifications to this product without prior express approval by Banner Engineering Corp will void the product warranties. All specifications published in this document are subject to change; Banner reserves the right to modify product specifications or update documentation at any time. Specifications and product information in English supersede that which is provided in any other language. For the most recent version of any documentation, refer to: www.bannerengineering.com.

For patent information, see www.bannerengineering.com/patents.


© Banner Engineering Corp. All rights reserved.

## 11.8 EU/UK Declaration of Conformity (DoC)

Banner Engineering Corp. herewith declares that these products are in conformity with the provisions of the listed directives and all essential health and safety requirements have been met. For the complete DoC, please go to www.bannerengineering.com.

| Product | Directive |
|---|---|
| EZ-SCREEN LP Low-Profile Safety Light Curtain | EU: Machinery Directive 2006/42/EC |
| | UKCA: Machinery (Safety) Regulation 2008 |

Representative in EU: Spiros Lachandidis, Managing Director, **Banner Engineering BV** Park Lane | Culliganlaan 2F bus 3 | 1831 Diegem, BELGIUM

Representative in UK: Tony Coghlan, Managing Director, **Turck Banner LTD** Blenheim House | Blenheim Court | Wickford, Essex SS11 8YT | Great Britain

## 11.9 Contact Us

Banner Engineering Corp. headquarters is located at: 9714 Tenth Avenue North | Minneapolis, MN 55441, USA | Phone: + 1 888 373 6767

For worldwide locations and local representatives, visit www.bannerengineering.com.

## 11.10 Document Information

Document title: EZ-SCREEN LP Low-Profile Safety Light Curtain Instruction Manual
Part number: 140044
Revision: J
Original Instructions
© Banner Engineering Corp. All rights reserved.


© Banner Engineering Corp. All rights reserved.

Chapter Contents

# Chapter 12 Glossary of Safety Terminology

## A

**ANSI (American National Standards Institute)**

Acronym for the American National Standards Institute, an association of industry representatives that develops technical standards (including safety standards). These standards comprise a consensus from a variety of industries on good practice and design. ANSI standards relevant to the application of safety products include the ANSI B11 Series, and ANSI/RIA R15.06. See "Standards and Regulations" on page 7.

**Auto Power-Up**

A safety light curtain system feature that enables the system to be powered up into Run mode (or recover from a power interruption) without requiring a manual reset.

**Auto Start/Restart (Trip) Condition**

The safety outputs of a safety light curtain system turn off when an object completely blocks a beam. In an Auto Start/Restart condition, the safety outputs re-energize when the object is removed from the defined area.

**Auto Start/Restart (Trip) Initiate**

The resetting of a safeguard causing the initiation of machine motion or operation. Auto Start/Restart Initiate is not allowed as a means to initiate a machine cycle per NFPA 79 and ISO 60204-1, and is commonly confused with PSDI.

## B

**Blanking**

A programmable feature of a safety light curtain system that allows the light curtain to ignore certain objects located within the defined area. See **Floating Blanking** and **Reduced Resolution**.

**Blocked Condition**

A condition that occurs when an opaque object of sufficient size blocks/interrupts one or more light curtain beams. When a blocked condition occurs, OSSD1 and OSSD2 outputs simultaneously turn off within the system response time.

**Brake**

A mechanism for stopping, slowing, or preventing motion.

## C

**Cascade**

Series connection (or "daisy-chaining") of multiple emitters and receivers.

**CE**

Abbreviation for "Conformité Européenne" (French translation of "European Conformity"). The CE mark on a product or machine establishes its compliance with all relevant European Union (EU) Directives and the associated safety standards.

**Clutch**

A mechanism that, when engaged, transmits torque to impart motion from a driving member to a driven member.

**Control Reliability**

A method of ensuring the performance integrity of a control system or device. Control circuits are designed and constructed so that a single failure or fault within the system does not prevent the normal stopping action from being applied to the machine when required, or does not create unintended machine action, but does prevent initiation of successive machine action until the failure is corrected.

**CSA**

Abbreviation for Canadian Standards Association, a testing agency similar to Underwriters Laboratories, Inc. (UL) in the United States. A CSA-certified product has been type-tested and approved by the Canadian Standards Association as meeting electrical and safety codes.

## D

**Defined Area**

The "screen of light" generated by a safety light curtain system, defined by the height and the safety distance (minimum distance) of the system.


© Banner Engineering Corp. All rights reserved.

### Designated Person

A person or persons identified and designated in writing, by the employer, as being appropriately trained and qualified to perform a specified checkout procedure.

## E

### Emitter

The light-emitting component of a safety light curtain system, consisting of a row of synchronized modulated LEDs. The emitter, together with the receiver (placed opposite), creates a "screen of light" called the defined area.

### External Device Monitoring (EDM)

A means by which a safety device (such as a safety light curtain) actively monitors the state (or status) of external devices that may be controlled by the safety device. A lockout of the safety device will result if an unsafe state is detected in the external device. External device(s) may include, but are not limited to: MPCEs, captive contact relays/contactors, and safety modules.

## F

### Failure to Danger

A failure that delays or prevents a machine safety system from arresting dangerous machine motion, thereby increasing risk to personnel.

### Final Switching Device (FSD)

The component of the machine’s safety-related control system that interrupts the circuit to the machine primary control element (MPCE) when the output signal switching device (OSSD) goes to the OFF-state.

### Fixed Blanking

A programming feature that allows a safety light curtain system to ignore objects (such as brackets or fixtures) that will always be present at a specific location within the defined area. The presence of these objects will not cause the system’s safety outputs (for example, Final Switching Devices) to trip or latch. If any fixed objects are moved within or removed from the defined area, a Lockout condition results.

### Floating Blanking

See **Reduced Resolution**.

### FMEA (Failure Mode and Effects Analysis)

A testing procedure by which potential failure modes in a system are analyzed to determine their results or effects on the system. Component failure modes that produce either no effect or a Lockout condition are permitted; failures that cause an unsafe condition (a failure to danger) are not. Banner safety products are extensively FMEA tested.

## G

### Guarded Machine

The machine whose point of operation is guarded by the safety system.

## H

### Hard (Fixed) Guard

Screens, bars, or other mechanical barriers affixed to the frame of the machine intended to prevent entry by personnel into the hazardous area(s) of a machine, while allowing the point of operation to be viewed. The maximum size of the openings is determined by the applicable standard, such as Table O-10 of OSHA 29CFR1910.217, also called a "fixed barrier guard."

### Harm

Physical injury or damage to the health of people, which may result through direct interaction with the machine or through indirect means, as a result of damage to property or to the environment.

### Hazard Point

The closest reachable point of the hazardous area.

### Hazardous Area

An area that poses an immediate or impending physical hazard.

## I

### Internal Lockout

A Lockout condition that is due to an internal safety system problem. Generally, indicated by the red Status indicator LED (only) flashing. Requires the attention of a Qualified Person.

## K


© Banner Engineering Corp. All rights reserved.

### Key Reset (Manual Reset)

A key-operated switch used to reset a safety light curtain system to Run mode following a Lockout condition, or to enable machine operation following a Manual Start/Restart (Latch) condition. Also refers to the act of using the switch.

## L

### Lockout Condition

A safety light curtain condition that is automatically attained in response to certain failure signals (an internal lockout). When a Lockout condition occurs, the safety light curtain's safety outputs turn OFF; the failure must be corrected and a manual reset is required to return the system to Run mode.

## M

### Machine Primary Control Element (MPCE)

An electrically powered element, external to the safety system, which directly controls the machine's normal operating motion in such a way that the element is last (in time) to operate when machine motion is either initiated or arrested.

### Machine Response Time

The time between the activation of a machine-stopping device and the instant when the dangerous parts of the machine reach a safe state by being brought to rest.

### Manual Start/Restart (Latch) Condition

The safety outputs of a safety light curtain system turn off when an object completely blocks a beam. In a Manual Start/Restart condition, the safety outputs stay off when the object is removed from the defined area. To re-energize the outputs, perform a proper manual reset.

### Minimum Object Sensitivity (MOS)

The minimum-diameter object that a safety light curtain system can reliably detect. Objects of this diameter or greater will be detected anywhere in the defined area. A smaller object can pass undetected through the light if it passes exactly midway between two adjacent light beams. Also known as MODS (Minimum Object Detection Size). See also **Specified Test Piece**.

### Muting

The automatic suspension of the safeguarding function of a safety device during a non-hazardous portion of the machine cycle.

## O

### OFF State

The state in which the output circuit is interrupted and does not permit the flow of current.

### ON State

The state in which the output circuit is complete and permits the flow of current.

### OSHA (Occupational Safety and Health Administration)

A U.S. Federal agency, the Division of the U.S. Department of Labor, that is responsible for the regulation of workplace safety.

### OSSD

Output Signal Switching Device. The safety outputs that are used to initiate a stop signal.

## P

### Part-Revolution Clutch

A type of clutch that may be engaged or disengaged during the machine cycle. Part-revolution clutched machines use a clutch/brake mechanism, which can arrest machine motion at any point in the stroke or cycle.

### Pass-Through Hazard

A pass-through hazard is associated with applications where personnel may pass through a safeguard (which issues a stop command to remove the hazard), and then continues into the guarded area, such as in perimeter guarding. Subsequently, their presence is no longer detected, and the related danger becomes the unexpected start or restart of the machine while personnel are within the guarded area.

### Point of Operation

The location of a machine where material or a workpiece is positioned and a machine function is performed upon it.


© Banner Engineering Corp. All rights reserved.

### PSDI (Presence-Sensing Device Initiation)

An application in which a presence-sensing device is used to actually start the cycle of a machine. In a typical situation, an operator manually positions a part in the machine for the operation. When the operator moves out of the danger area, the presence-sensing device starts the machine (no start switch is used). The machine cycle runs to completion, and the operator can then insert a new part and start another cycle. The presence-sensing device continually guards the machine. Single-break mode is used when the part is automatically ejected after the machine operation. Double-break mode is used when the part is both inserted (to begin the operation) and removed (after the operation) by the operator. PSDI is commonly confused with "Trip Initiate." PSDI is defined in OSHA CFR1910.217. Banner safety light curtain systems may not be used as PSDI devices on mechanical power presses, per OSHA regulation 29 CFR 1910.217.

## Q

### Qualified Person

A person who, by possession of a recognized degree or certificate of professional training, or who, by extensive knowledge, training and experience, has successfully demonstrated the ability to solve problems relating to the subject matter and work.

## R

### Receiver

The light-receiving component of a safety light curtain system, consisting of a row of synchronized phototransistors. The receiver, together with the emitter (placed opposite), creates a "screen of light" called the defined area.

### Reduced Resolution

A feature that allows a safety light curtain system to be configured to produce an intentionally disabled light beam(s) within the light curtain, which increases the minimum object sensitivity. The disabled beam(s) appears to move up and down (float) to allow the feeding of an object through the defined area at any point without tripping the safety outputs (for example, OSSDs) and causing a Auto Start/Restart (Trip) or Manual Start/Restart (Latch) condition. Sometimes called Floating Blanking.

### Reset

The use of a manually operated switch to restore the safety outputs to the On state from a lockout or a Manual Start/Restart (Latch) condition.

### Resolution

See **Minimum Object Sensitivity**.

## S

### Self-Checking (Circuitry)

A circuit with the capability to electronically verify that all of its own critical circuit components, along with their redundant backups, are operating properly. Banner safety light curtain systems and safety modules are self-checking.

### Safety Distance

The minimum distance required to allow the machine’s hazardous motion to stop completely, before a hand (or other object) can reach the nearest hazard point. Measured from the midpoint of the defined area to the nearest hazard point. Factors that influence minimum separation distance include the machine stop time, the light curtain system response time, and the light curtain minimum object detection size.

### Specified Test Piece

An opaque object of sufficient size used to block a light beam to test the operation of a safety light curtain system. When inserted into the defined area and placed in front of a beam, the test piece causes the outputs to de-energize.

### Supplemental Guarding

Additional safeguarding device(s) or hard guarding, used to prevent a person from reaching over, under, through or around the primary safeguard or otherwise accessing the guarded hazard.

## T

### Test Piece

An opaque object of sufficient size used to block a light beam to test the operation of a safety light curtain system.

## U

### UL (Underwriters Laboratory)

A third-party organization that tests products for compliance with appropriate standards, electrical codes, and safety codes. Compliance is indicated by the UL listing mark on the product.


© Banner Engineering Corp. All rights reserved.

# Index


## A

apply power
  system power-up 69
  trip 69
  latch 69
applications
  inappropriate 10
auxiliary output 52, 61
auto reset 63
alignment, mechanical 35
alignment
  optical 42
applications and limitation 9
adjacent reflective surfaces 25
accessories
  muting module 84
  safety controller 84
  alignment aids 89
alignment aids
  accessories 89

## B

blanking
  fixed 45
  floating 44
brackets
  assembly instructions 32
  end mount 30
  end mount 31
  side mount 32
  side mount 34

## C

checkout
  initial 41
  configuring for initial 41
  periodic 70
  commissioning 59
  schedule of 78
control reliability 16
configure
  fixed blanking 45
calculating safety (minimum) distance 19
cordsets
  routing 39
cordset
  emitter 40
  receiver 40
  maximum length 40
corner mirrors 26
crosstalk
  scan code 28

## D

dual-channel control 49
DIP Switches 15
display 61
dimensions 36

## E

emitter report test input 52
external device monitoring (EDM) 15
external device monitoring 50, 50
EDM 50, 51, 50
emitter wiring 54
emitter status indicators 66
external device monitoring wiring 51
emitter fault 61
electrical connections 48
emitter
  orientation 27
electrical noise 77
error codes
  emitter 73
  receiver 73
emitter error codes 73

## F

fixed blanking 45
fixed blanking
  configure 45
FSD 49
FSD
  wiring 55
final switching devices 49
Final Switching Device (FSD) 11
floating blanking 44

## H

hazards
  reducing 22

## I


© Banner Engineering Corp.

initial power-up 41
internal faults 69
inverted display 61
initial electrical connections 40
installation
  mechanical 19
  electrical 39
interface module wiring 56

## L

latch output 69, 69, 61
lockouts 69
lockout conditions 63, 71
LEDs 65

## M

Machine Primary Control Elements (MPCEs) 11
manual reset 63
mechanical alignment 35
minimum distance 19
mirrors
  optical alignment 43
machine primary control elements 50
MPCE 50
multiple systems 28
muting module
  accessories 84

## N

noise
  electrical and optical 77

## O

OSSD 52, 48
Output Signal Switching Device (OSSD) 11
optical alignment 42
optical alignment with mirrors 43
output signal switching device 48
orientation 27
optical noise 77

## P

power
  system 69
protective stop circuit 49

## R

receiver status indicators 66
remote test input
  emitter 52
reset procedure 64
reset switch location 64, 24
run mode 69
reset
  manual 63
  auto 63
reduced resolution 61, 44
routing cordsets 39
reset routine 64
reflective surfaces 25
receiver
  orientation 27
recovery procedures 71
receiver error codes 73

## S

single-channel control 49
status indicators 65
status indicators
  receiver 66
  emitter 66
safety stop circuit 49
safety module wiring 56
sensor interchangeability 53
system configuration settings 61
scan code 61
specifications 17
safety distance 19
safety distance formula 20
supplemental safeguarding 23
safety controller 84

## T

trip output 69, 69, 63, 61
trip or latch output 15
test/reset 61
trip/latch output 63
trip test 46
troubleshooting
  error codes 73
  lockout conditions 71
  error codes 73
test mode 76

## W

wiring
  safety module 56
  FSD 55
  emitter 54

© Banner Engineering Corp.

interface module 56

© Banner Engineering Corp.

LinkedIn

Twitter

Facebook




© 2024. All rights reserved.
www.bannerengineering.com