# EZA-TE Series Tubular Enclosures

*For EZ-SCREEN sensors mounted in washdown environments*



**Figure 1. Assembled enclosure**

**CAUTION... Reduced Sensing Range**

Sensing Range is reduced 50% due to tubular construction.

**WARNING...**

**Maintain Required Separation Distance**

The light screen produced by the optical safety system sensors must be placed at a minimum safe distance from the dangerous motion of the machine being guarded. This necessary minimum distance is called the separation distance, and is discussed in Section 3 of the appropriate instruction manuals. Failure to calculate this distance correctly and to maintain minimum separation distance can result in serious injury.

## Features

- FDA-grade polycarbonate tubing and acetal end caps
- Stainless steel mounting components
- Brackets and fasteners included
- Ideal for high-pressure washdown applications
- NEMA 4X, IP67
- 12 models available to accommodate EZ-SCREEN® sensors.

Banner EZA-TE Series Tubular Enclosures are designed specifically for use with Banner EZ-SCREEN emitters and receivers. The enclosures are constructed of FDA-approved rugged polycarbonate tubing with FDA-approved acetal end caps. The enclosures are mounted with stainless steel mounting brackets and fasteners. The enclosures are available in 12 lengths.

Use of the enclosure affects the sensing range of the sensor used: when used in pairs, range can be reduced by 50%.

Figure 4 shows how the enclosure is assembled. Components are bagged together for easier assembly.

## Models

| Enclosure Model | Enclosure Height (Figure 2) | For EZ-SCREEN Sensor Models |
|---|---|---|
| EZA-TE-150 | 439 mm (17.3") | SLS..-150 |
| EZA-TE-300 | 541 mm (21.3") | SLS..-300 |
| EZA-TE-450 | 744 mm (29.3") | SLS..-450 |
| EZA-TE-600 | 846 mm (33.3") | SLS..-600 |
| EZA-TE-750 | 1024 mm (40.3") | SLS..-750 |
| EZA-TE-900 | 1151 mm (45.3") | SLS..-900 |
| EZA-TE-1050 | 1354 mm (53.3") | SLS..-1050 |
| EZA-TE-1200 | 1455 mm (57.3") | SLS..-1200 |
| EZA-TE-1350 | 1608 mm (63.3") | SLS..-1350 |
| EZA-TE-1500 | 1760 mm (69.3") | SLS..-1500 |
| EZA-TE-1650 | 1913 mm (75.3") | SLS..-1650 |
| EZA-TE-1800 | 2065 mm (81.3") | SLS..-1800 |

Printed in USA Mar 2013 P/N 117107 Rev. D

ПРОМЭЛЕКТРОНИКА/ sales@prom-elec.com

## Adjacent Reflective Surfaces

A reflective surface located adjacent to the defined area may deflect one or more beams around an object in the defined area. In the worst case, an “optical short circuit” may occur, allowing an object to pass undetected through the defined area (see Figure 2).

This reflective surface may result from shiny surfaces or glossy paint on the machine, the workpiece, the work surface, the floor or the walls. Beams deflected by reflective surfaces are discovered by performing the trip test portion of the final alignment procedure and the periodic checkout procedures (Section 3.4.4 of the EZ-SCREEN Instruction Manual).

**To eliminate problem reflections:**

- **If possible, relocate the sensors** to move the beams away from the reflective surface(s), being careful to maintain adequate separation distance (see Figure 2).
- **Otherwise, if possible, paint, mask or roughen** the shiny surface to reduce its reflectivity.
- **Where these are not possible (as with a shiny workpiece)**, mount the sensors in such a way that the receiver’s field of view and/or the emitter’s spread of light are restricted.
- **Repeat the trip test** to verify that these changes have eliminated the problem reflection(s). If the workpiece is especially reflective and comes close to the defined area, perform the trip test with the workpiece in place.

**It is important to note** that using these tubular enclosures will increase (effectively double) the distance “d” shown in Figure 2. The curved surfaces increase the potential angle of the beams. Calculate the position of the emitter and receiver based on the formula shown in Figure 2 (in addition to the separation distance information presented in the EZ-SCREEN manual).

**WARNING . . . Avoid Installation Near Reflective Surfaces**

Avoid locating the defined area near a reflective surface; it could reflect sensing beam(s) around an object or person within the defined area, and prevent its detection by the EZ-SCREEN System. Perform the trip test, as described in Section 3.4.4 of the EZ-SCREEN Instruction Manual, to detect such reflection(s) and the resultant optical short circuit.

Failure to prevent reflection problems will result in incomplete guarding and could result in serious bodily injury or death.

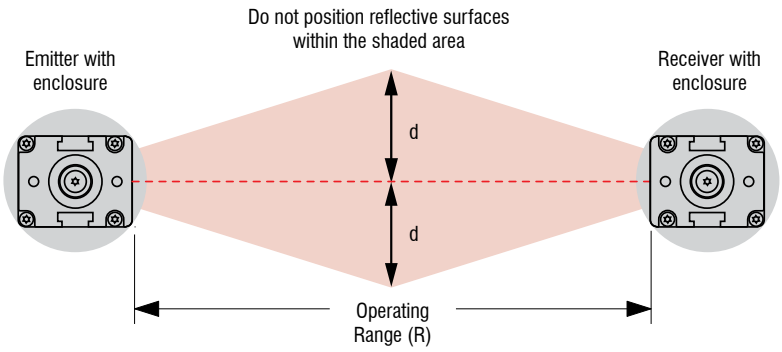


Operating Range to 3 m (10'): d = 0.26 m (10")
Operating Range > 3 m (>10'):d = 0.0875 x R (m or ft)

**Figure 2. Adjacent reflective surfaces**


**Banner Engineering Corp.** • Minneapolis, MN U.S.A
www.bannerengineering.com • Tel: 763.544.3164

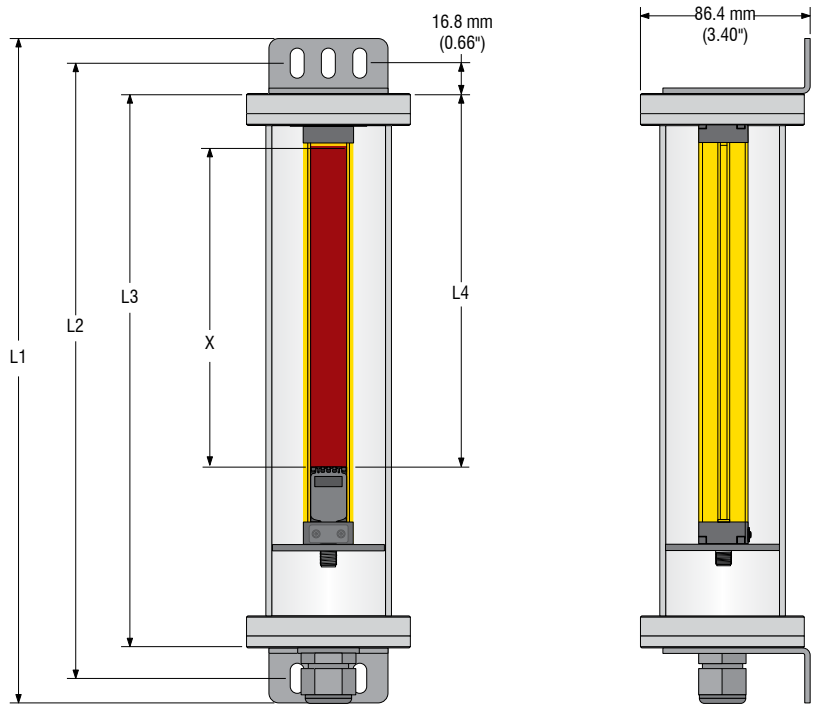


**Figure 3. Enclosure/EZ-SCREEN dimensions**

| Included with each EZA-TE Series Tubular Enclosure | Quantity |
|---|---|
| Spacer | 1 |
| Top End Cap | 1 |
| Bottom End Cap | 1 |
| Polycarbonate Tube | 1 |
| O-Ring (#142) | 2 |
| Mounting Bracket | 2 |
| M5 x 8 mm Screw | 2 |
| M5 x 14 mm Screw | 2 |
| M5 Internal Tooth Lockwasher | 2 |
| #6-32 Screw | 8 |
| #6 Split-Ring Lockwasher | 8 |
| #10-32 Screw | 4 |
| #10 External Tooth Lockwasher | 4 |

| Enclosure Model | L1 | L2 | L3 | L4 | X |
|---|---|---|---|---|---|
| EZA-TE-150 | 439 mm (17.3") | 414 mm (16.3") | 381 mm (15.0") | 277 mm (10.9") | 150 mm (5.9") |
| EZA-TE-300 | 541 mm (21.3") | 516 mm (20.3") | 483 mm (19.0") | 386 mm (15.2") | 300 mm (11.8") |
| EZA-TE-450 | 744 mm (29.3") | 719 mm (28.3") | 686 mm (27.0") | 538 mm (21.2") | 450 mm (17.7") |
| EZA-TE-600 | 846 mm (33.3") | 820 mm (32.3") | 787 mm (31.0") | 686 mm (27.0") | 600 mm (23.6") |
| EZA-TE-750 | 1024 mm (40.3") | 998 mm (39.3") | 965 mm (38.0") | 836 mm (32.9") | 750 mm (29.5") |
| EZA-TE-900 | 1151 mm (45.3") | 1125 mm (44.3") | 1092 mm (43.0") | 986 mm (38.8") | 900 mm (35.4") |
| EZA-TE-1050 | 1354 mm (53.3") | 1328 mm (52.3") | 1295 mm (51.0") | 1135 mm (44.7") | 1050 mm (41.3") |
| EZA-TE-1200 | 1455 mm (57.3") | 1430 mm (56.3") | 1397 mm (55.0") | 1285 mm (50.6") | 1200 mm (47.2") |
| EZA-TE-1350 | 1608 mm (63.3") | 1582 mm (62.3") | 1549 mm (61.0") | 1435 mm (56.5") | 1350 mm (53.1") |
| EZA-TE-1500 | 1760 mm (69.3") | 1735 mm (68.3") | 1702 mm (67.0") | 1585 mm (62.4") | 1500 mm (59.1") |
| EZA-TE-1650 | 1913 mm (75.3") | 1887 mm (74.3") | 1854 mm (73.0") | 1735 mm (68.3") | 1650 mm (65.0") |
| EZA-TE-1800 | 2065 mm (81.3") | 2040 mm (80.3") | 2000 mm (79.0") | 1885 mm (74.2") | 1800 mm (70.9") |

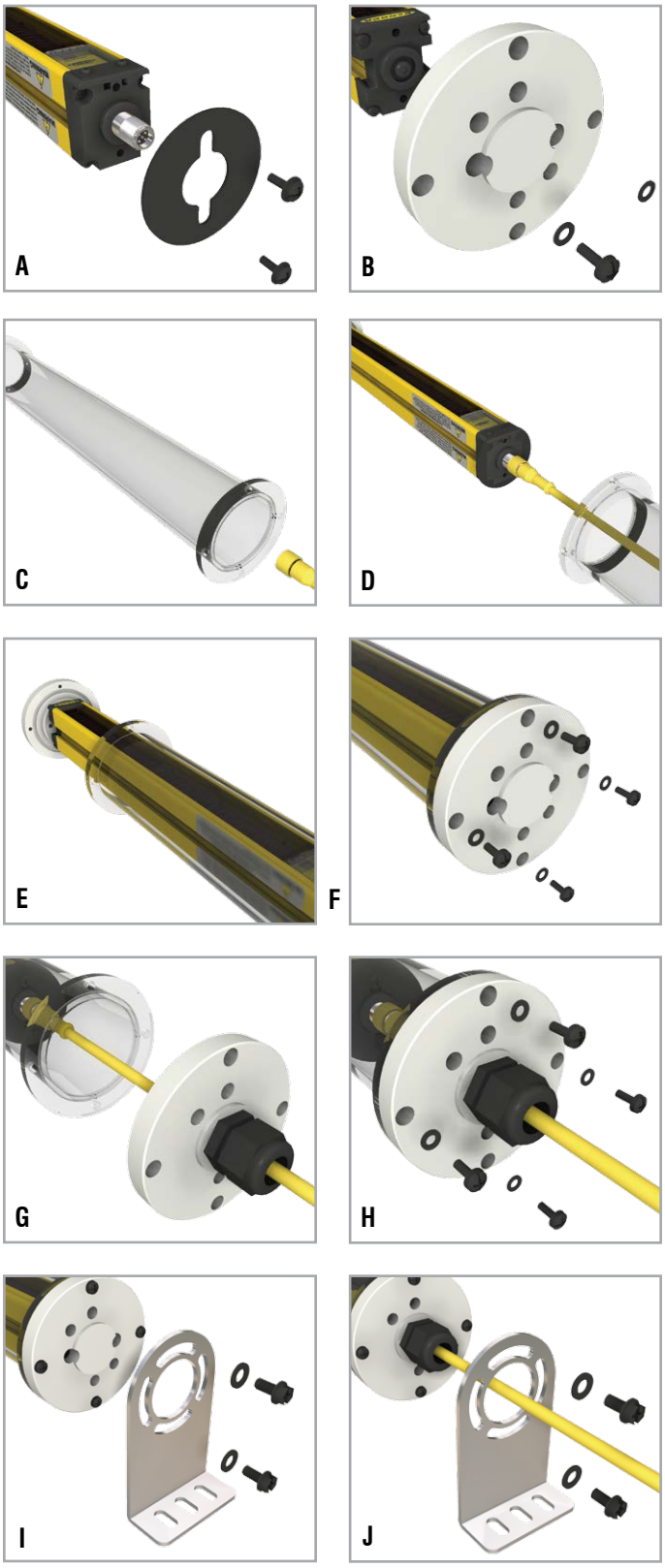


**Figure 4. EZA-TE Series Tubular Enclosure assembly steps**

# Assembly Instructions

A. Place spacer disk on the QD end of the sensor housing, using the two M5 x 8 mm screws. Torque: 30 in-lbs max.

B. Screw the top cap onto the non-QD end of the sensor housing, using the two M5 x 14 mm screws and internal tooth lockwashers (make sure o-ring is in place on top cap). Torque: 6 in-lbs max.

C. Being careful not to scratch the tubular housing, slide the cable or terminated end of the cordset into the labeled end of the clear tube and push it through, so it comes out the other end.

D. Connect the cordset to the sensor housing.

E. Slide the sensor housing into the clear tube until the top cap mates with the tube flange. Make sure the o-ring seals against the flat surface of the flange.

F. Screw the top cap to the tube flange using four #6-32 screws and lockwashers. Torque: 15 in-lbs max.

G. Slide the bottom end cap over the unterminated end of the cordset, making sure the o-ring is in place on the bottom cap.

H. Screw the bottom cap to the tube flange, using four #6-32 screws and lockwashers. Make sure the o-ring seals against the flat surface of the flange. Torque: 15 in-lbs max. Tighten the strain relief nut over the cordset cable.

I. Place the mounting bracket on the top cap and secure with two #10-32 screws and external tooth lockwashers. Torque: 50 in-lbs max.

J. Place the mounting bracket over the cordset cable and to the bottom end cap; secure with two #10-32 screws and external tooth lockwashers. Torque: 50 in-lbs max.

Banner Engineering Corp. warrants its products to be free from defects in material and workmanship for one year following the date of shipment. Banner Engineering Corp. will repair or replace, free of charge, any product of its manufacture which, at the time it is returned to the factory, is found to have been defective during the warranty period. This warranty does not cover damage or liability for misuse, abuse, or the improper application of the Banner product.

**THIS LIMITED WARRANTY IS EXCLUSIVE AND IN LIEU OF ALL OTHER WARRANTIES WHETHER EXPRESS OR IMPLIED (INCLUDING, WITHOUT LIMITATION, ANY WARRANTY OF MERCHANTABILITY OR FITNESS FOR A PARTICULAR PURPOSE), AND WHETHER ARISING UNDER COURSE OF PERFORMANCE, COURSE OF DEALING OR TRADE USAGE.**

This Warranty is exclusive and limited to repair or, at the discretion of Banner Engineering Corp., replacement. **IN NO EVENT SHALL BANNER ENGINEERING CORP. BE LIABLE TO BUYER OR ANY OTHER PERSON OR ENTITY FOR ANY EXTRA COSTS, EXPENSES, LOSSES, LOSS OF PROFITS, OR ANY INCIDENTAL, CONSEQUENTIAL OR SPECIAL DAMAGES RESULTING FROM ANY PRODUCT DEFECT OR FROM THE USE OR INABILITY TO USE THE PRODUCT, WHETHER ARISING IN CONTRACT OR WARRANTY, STATUTE, TORT, STRICT LIABILITY, NEGLIGENCE, OR OTHERWISE.**

Banner Engineering Corp. reserves the right to change, modify or improve the design of the product without assuming any obligations or liabilities relating to any product previously manufactured by Banner Engineering Corp.



Banner Engineering Corp., 9714 Tenth Ave. No., Minneapolis, MN USA 55441 • Phone: 763.544.3164 • www.bannerengineering.com • Email: sensors@bannerengineering.com