

SECTION A-A

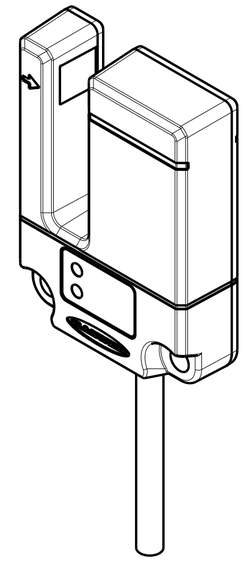

ISOMETRIC VIEW

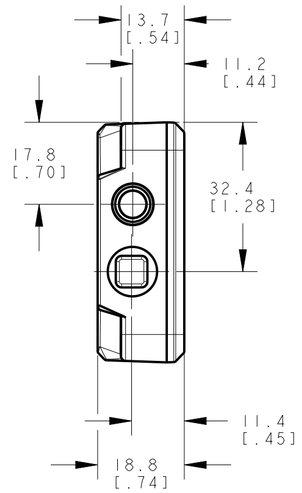

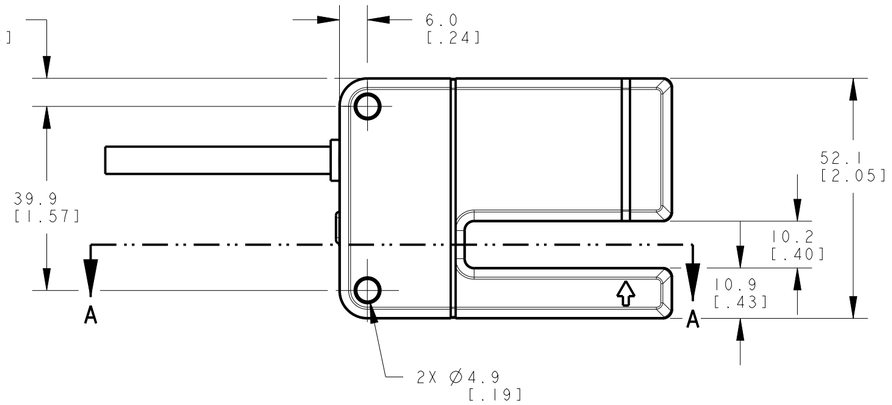

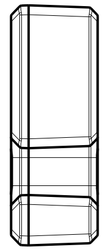

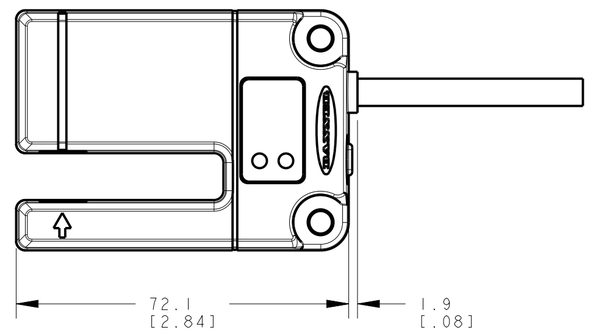

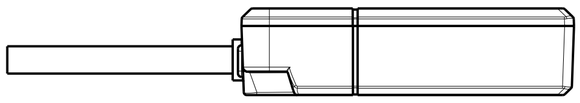

This drawing is the property of BANNER ENGINEERING CORP. Any use or reproduction, in any form, without prior written permission of Banner is prohibited.
© 2015 Banner Engineering Corp.

THIRD ANGLE PROJECTION

BANNER ENGINEERING CORP.
www.bannerengineering.com

TITLE
SLE10 CABLE/PIGTAIL

SIZE	DRAWING NO.	REV.
C	159575	A
SCALE 1:1	SHEET 1 OF 1	

CREO

NOTES:
1. ALL DIMENSIONS ARE MILLIMETERS [INCHES] UNLESS OTHERWISE NOTED.
2. REFER TO "www.bannerengineering.com" FOR ADDITIONAL DATA AND SPECIFICATIONS.

ПРОМЭЛЕКТРОНИКА/ sales@prom-elec.com