A-GAGE® EZ-ARRAY™ with IO-Link v1.1

Instruction Manual

Original Instructions
222662 Rev. D
23 February 2022
© Banner Engineering Corp. All rights reserved

222662

ПРОМЭЛЕКТРОНИКА/ sales@prom-elec.com

Contents

1 Features 3
2 Overview 4
2.1 System Components 5
2.2 Models 5
2.3 Status Indicators 5
2.3.1 Zone Indicators (Beams Blocked Segment) 6
2.3.2 Three-Digit Display 6
2.3.3 Blanking Indicator 6
2.3.4 Electronic Configuration Indicator 6
3 Configuration via DIP Switch or IO-Link v1.1 Interface 8
3.1 Receiver Gray (Remote Teach) Wire 8
3.2 Gain Configuration 9
3.3 Blanking 10
3.4 Measurement Mode Selection 10
3.5 Outputs 13
3.5.1 Analog Output Configuration 13
3.5.2 Discrete Output Configuration 13
3.6 Scanning Method 13
3.6.1 Straight Scan 14
3.6.2 Single-Edge Scan 14
3.6.3 Double-Edge Scan 14
3.6.4 Maximum Scan Times in SIO Mode 15
4 Installation Instructions 16
4.1 Mounting the Emitter and Receiver 16
4.2 Mechanical Alignment 16
4.3 Wiring Diagrams 18
4.4 Optical Alignment 19
5 Receiver User Interface 21
5.1 Configuration DIP Switches 21
5.1.1 Scanning Modes (S1 and S2) 22
5.1.2 Measurement Modes (S3 and S4) 22
5.1.3 Analog Slope (S5) 22
5.1.4 Complementary/Alarm (S6) 22
5.2 Alignment/Blanking Button (Electronic Alignment) 22
5.2.1 Electronic Alignment and Blanking - Receiver Interface 23
5.2.2 Flashing "000" on the 3-Digit Display 23
5.3 Gain (Sensitivity Adjust) Button 23
5.4 Inverting the 3-Digit Display 23
6 Additional Information 24
6.1 IO-Link Overview 24
6.2 IO-Link v1.1 Profile and Models 24
6.3 Hardware Interface 24
6.3.1 Electrical Interface 25
6.3.2 IO-Link Master 25
6.4 IODD (IO-Link Device Description) and Parameters 25
7 Troubleshooting 26
7.1 Error Codes 26
7.2 "Dirty" Channel Indicator 26
8 Specifications 27
8.1 FCC Part 15 28
8.2 Industry Canada 28
8.3 Emitter and Receiver Dimensions 29
8.4 Standard Bracket Dimensions 30
9 Accessories 31
9.1 Cordsets and Connections 31
9.2 Alignment Aids 32
9.3 Accessory Mounting Brackets and Stands 33
10 Product Support and Maintenance 34
10.1 Replacement Parts 34
10.2 Contact Us 34
10.3 Banner Engineering Corp. Limited Warranty 34

1 Features



- A cost-effective, two-piece measuring light curtain designed for quick and simple installations with the sophistication to handle the toughest sensing applications
- Excels at high-speed, precise process monitoring and inspection, profiling, and web-guiding applications
- A comprehensive combination of scanning options:
  - 16 measurement (scan analysis) modes
  - Three scanning methods
  - Selectable beam blanking
  - Selectable continuous or gated scan initiation
  - Selectable threshold setting for semi-transparent applications
  - Two analog outputs, two discrete outputs
  - Communication via IO-Link v1.1 interface
- Outstanding 4 meter range with 5 mm beam spacing
- Available in 12 lengths from 150 mm to 2400 mm
- Excellent 5 mm minimum object detection or 2.5 mm edge resolution, depending on scanning method
- Receiver user interface for quick, intuitive setup of many common applications:
  - Six-position DIP switch for setting scan mode, measurement mode, analog slope, discrete output 2 option (complementary measurement or alarm operation)
  - Two push buttons for gain method selection and alignment/ blanking
  - Seven Zone LEDs for instant alignment and beam blockage information
  - Three-digit display for sensing information and diagnostics
- Advanced configuration via IO-Link v1.1 communication interface, COM2 or COM3 selectable
- Remote teach wire option for alignment, gain settings, inverted display, and DIP switch disable

WARNING:

- **Do not use this device for personnel protection**
- Using this device for personnel protection could result in serious injury or death.
- This device does not include the self-checking redundant circuitry necessary to allow its use in personnel safety applications. A device failure or malfunction can cause either an energized (on) or de-energized (off) output condition.

2 Overview

The A-GAGE® EZ-ARRAY™ measuring light screen is ideal for such applications as on-the-fly product sizing and profiling, edge-guiding and center-guiding, loop tensioning control, hole detection, parts counting, and similar uses.

Emitters and receivers are available with arrays from 150 to 2400 mm (5.9 in to 94.5 in) long. The emitter has a column of infrared light emitting diodes (LEDs) spaced 5 mm apart; their light is collimated and directed toward the receiver, positioned opposite the emitter, which has photodiodes on the same 5 mm pitch. The light from each emitter LED is detected by the corresponding receiver photodiode.

This sophisticated light curtain is capable of detecting opaque cylindrical objects as small as 5mm in diameter or measuring part edges within 2.5 mm, depending on the scanning method selected (Scanning Method on page 13). The sensing range is 400 mm to 4 m (16 in to 13 ft) on standard models and 30 mm to 1500 mm (1.18 in to 59 in) on the short-range, low-contrast models. [1]

Short range, low contrast models are available for applications requiring a shorter distance between emitter and receiver or where detection and profiling of non-opaque targets is needed. Detection of glass or other clear objects is possible with this system.

The EZ-ARRAY's two-piece design makes it economical and easy to use. Controller functionality is built into the receiver housing. It can be configured for many straightforward applications using the six-position DIP switch on the front of the receiver (the receiver user interface).The IO-Link communication interface provides the capability for more advanced control and monitoring. See Additional Information on page 24.

The emitter and receiver housings can be side-mounted or end-cap-mounted using the included end-cap brackets; longer models also include a center bracket. (See Mounting the Emitter and Receiver on page 16.)

Beam synchronization is achieved via the 8-conductor sensor cables. Individual LEDs and a 3-digit diagnostic display on the receiver provide ongoing visual sensing status and diagnostic information. Comprehensive data is available to a process controller via a combination of four outputs: two analog and two discrete (discrete output 1 is an IO-Link output). The IO-Link output provides a discrete output (SIO mode) or a communication interface (IO-Link mode).

Figure 1. Application

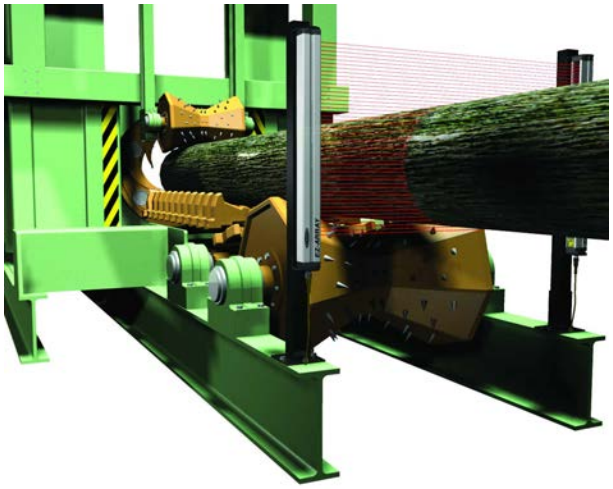

Figure 2. Emitter and Receiver

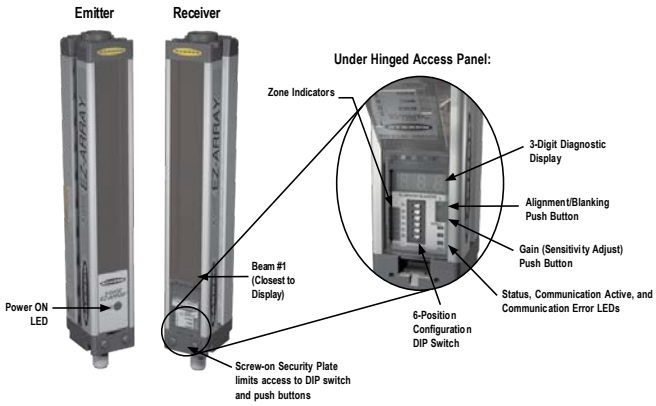

Built-in features in the EZ-ARRAY contribute to its ease of use. Many features are available using either the user-friendly receiver interface or the more advanced IO-Link v1.1 interface.

Diagnostic programming and easy-to-see indicators on the receiver simplify physical alignment and troubleshooting; more advanced diagnostics are available via the IO-Link v1.1 interface.

The alignment/blanking button (Alignment/Blanking Button (Electronic Alignment) on page 22) automatically equalizes the excess gain of each beam for reliable object detection throughout the array. This routine need not be performed again unless the sensing application changes, or if the emitter and/or receiver is moved.

Configurable beam blanking accommodates machine components and fixtures that must remain in or move through the light screen. Blanking may be set using the receiver interface, the teach wire, or the IO-Link v1.1 interface.

The EZ-ARRAY light screen provides a wide selection of sensing and output options, including measurement ("scan analysis") modes and scanning methods that can determine a target object's location, overall size, total height, or total width, or the number of objects. Scanning may be continuous or controlled by a gate sensor.

[1] Contact the factory for short-range, low-contrast models.

2.1 System Components

A typical A-GAGE EZ-ARRAY has four components: an emitter and a receiver, each with an integral quick-disconnect (QD) fitting, plus an 8-pin QD cordset for the emitter and for the receiver.

For applications that use the IO-Link interface, an additional cable splitter is used to convert the receiver 8-pin connector to a compatible M12 connector.

Figure 3. Components



2.2 Models

Emitter	Receiver with IO-Link v1.1	Receiver Discrete Output [2]	Receiver Analog Output	Array Length Y [3]	Total Beams
EA5E150Q	**EA5R150XK2Q**	PNP	Voltage (0-10 V)	150 mm (5.9 in)	30
EA5E300Q	**EA5R300XK2Q**	PNP	Voltage (0-10 V)	300 mm (11.8 in)	60
EA5E450Q	**EA5R450XK2Q**	PNP	Voltage (0-10 V)	450 mm (17.7 in)	90
EA5E600Q	**EA5R600XK2Q**	PNP	Voltage (0-10 V)	600 mm (23.6 in)	120
EA5E750Q	**EA5R750XK2Q**	PNP	Voltage (0-10 V)	750 mm (29.5 in)	150
EA5E900Q	**EA5R900XK2Q**	PNP	Voltage (0-10 V)	900 mm (35.4 in)	180
EA5E1050Q	**EA5R1050XK2Q**	PNP	Voltage (0-10 V)	1050 mm (41.3 in)	210
EA5E1200Q	**EA5R1200XK2Q**	PNP	Voltage (0-10 V)	1200 mm (47.2 in)	240
EA5E1500Q	**EA5R1500XK2Q**	PNP	Voltage (0-10 V)	1500 mm (59.1 in)	300
EA5E1800Q	**EA5R1800XK2Q**	PNP	Voltage (0-10 V)	1800 mm (70.9 in)	360
EA5E2100Q	**EA5R2100XK2Q**	PNP	Voltage (0-10 V)	2100 mm (82.7 in)	420
EA5E2400Q	**EA5R2400XK2Q**	PNP	Voltage (0-10 V)	2400 mm (94.5 in)	480

2.3 Status Indicators

Both the emitter and receiver provide ongoing visual indication of operating and configuration status.

The emitter has a red LED that signals proper operation (ON when power is applied).

[2] Discrete Output 1 is push-pull (IO-Link)
[3] Models with array lengths 1050mm and longer ship with a center bracket as well as two end-cap brackets.

Table 1: Emitter status indicators

LED	Color	Description
Status LED	Red ON	Status OK
	Red Flashing at 1 Hz	Error

The receiver has a bright Status LED that indicates overall sensing status (OK, marginal alignment, and hardware error). Two other LEDs indicate whether communication is active or if there is an error. Seven Zone indicators each communicate the blocked/aligned status of one-seventh of the total array. A 3-digit diagnostic display provides further diagnostic information: number of beams blocked, whether blanking is configured, and error codes. (See Error Codes on page 26 for a listing of error codes.)

Table 2: Receiver and IO-Link status indicators

LED Indicator	Color	Description
7-Zone Indicators	Red	Blocked channels within the zone
	Green	All channels are clear within the zone
Status	Red	Marginal alignment or hardware error; check the 3-digit display
	Green	System is okay
COMM	Amber On	IO-Link mode
	Amber Off	SIO mode
Error	Red	IO-Link error; check the cabling or master controller

2.3.1 Zone Indicators (Beams Blocked Segment)

Seven LEDs represent emitter/receiver alignment status. They provide a visual aid for sensor alignment and monitoring objects within the sensor's field of view. The sensor array is partitioned into seven equal segments, each of which is represented by one of the seven LEDs. The LED closest to DIP switch S6 (see Configuration via DIP Switch or IO-Link v1.1 Interface on page 8) represents the group of optical channels closest to the receiver display (the "bottom" group). The LED closest to DIP switch 1 represents the far segment of channels.

These LEDs illuminate either green or red. When an LED is green, no unblanked beams are obstructed in that segment. When the LED is red, one or more beams in that segment is obstructed.

2.3.2 Three-Digit Display

The 3-digit display has slightly different functions during normal operation, alignment, and gain adjust modes. In normal operation the display indicates the current numerical value of measurement mode 1. The display also identifies the following activated sensor functions: blanking and locked-out user interface/electronic configuration, as shown in Electronic Configuration Indicator on page 6.

For directions for inverting the display, see Receiver Gray (Remote Teach) Wire on page 8 or see HW Interface Flags in Configuration via DIP Switch or IO-Link v1.1 Interface on page 8.

During blanking mode, the display reads "**n**", followed by the number of blocked beams in the array. During alignment mode, it reads "**A**", followed by the number of blocked, unblanked beams; a period follows the A ("**A.**") if blanking is configured.

During gain adjust mode, the display reads " $_{L}$ " followed by "**1**" or "**2**" to indicate the gain level. (A "**1**" represents high excess gain, and a "**2**" represents low contrast.)

If a sensing error occurs, the display reads "**c**" followed by a number that corresponds to the recommended corrective action. Refer to Error Codes on page 26 for more information.

2.3.3 Blanking Indicator

The Blanking indicator will be visible (ON) when the blanking feature is enabled. It appears as a period following the first digit of the display.

2.3.4 Electronic Configuration Indicator

The Electronic Configuration indicator is on when the sensor configuration is defined by the IO-Link v1.1 interface and not the DIP switch. When electronic configuration is enabled, the DIP switch is ignored.

Figure 4. Electronic configuration indicator

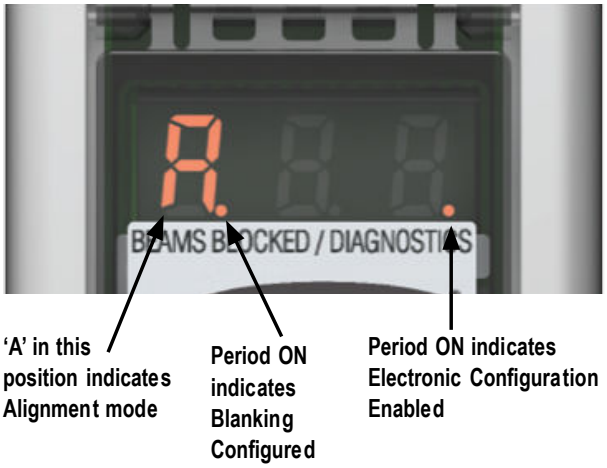

3 Configuration via DIP Switch or IO-Link v1.1 Interface

Commonly used configuration options can be set up easily via a six-position DIP switch located behind a hinged clear access panel on the front of the receiver.

Access to the DIP switch can be prevented by using the screw-on security plate to hold the clear access panel closed or by disabling them via the IO-Link v1.1 interface.

3.1 Receiver Gray (Remote Teach) Wire

The receiver gray (remote teach) wire is used to electronically emulate the receiver push button functions (see Troubleshooting and Error Codes) via a process controller, to disable the DIP switches for security, or to provide a gate input to initiate sensor scanning. Connect a normally open switch between the receiver's gray wire and dc common, or connect the gray wire to a digital input (PLC) and pulse the wire as indicated in Status Indicators on page 5.

The Remote Teach wire is disabled by default. It can be enabled via the IO-Link interface.

Note: A low level is 0 to 2 volts and a high level is 10 to 30 volts or circuit open. Input impedance is 22k.

Remote TEACH/Gate determines the functionality of the receiver gray wire.

- **Disabled**—The remote wire has no function (regardless of whether it is low or high). When the gray wire is disabled, the receiver is in continuous scan mode; it begins a new scan immediately after updating the outputs from the previous scan. (Continuous scan is used in most analog output applications and whenever continuous updating of the outputs is acceptable.) The gray wire is always enabled when in DIP switch mode.
- **Remote Teach**—The gray wire provides the full Remote Teach functionality.
- **Alignment/Sensitivity**—This mode is an abbreviated version of Remote Teach. It can perform the alignment and sensitivity adjustment functions, but not the display inversion or DIP switch enable/disable functions.

Gate Mode—Options enable the gray wire to be wed as a gate input pulse, typically from a dc device such as an NPN-output photoelectric sensor or a PLC discrete output.

- **Gate - Active High**—The receiver scans whenever the gate is pulled high.
- **Gate - Active Low**—The receiver scans whenever the gate is pulled low.
- **Gate - Rising Edge**—The receiver scans once for each low-to-high gate transition. (Multiple transitions cannot be faster than the sensor's response for them to be reliably detected.)
- **Gate - Falling Edge**—The receiver scans once for each high-to-low gate transition. (Multiple transitions cannot be faster than the sensor's response for them to be reliably detected.)

Table 3: Alignment/blanking configuration with the remote wire

Process		Remote Wire Procedure 0.05 ≤ sec. T ≤ 0.8 sec.	Result
Alignment / Blanking	Access Alignment Mode	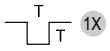	**A** appears on 3-digit display
	Access Blanking Mode	*From Alignment Mode:* 	**n** appears on 3-digit display, along with number of blocked beams
	Exit Blanking Mode	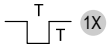	**A.** appears on 3-digit display (sensor returns to alignment mode with blanking enabled)
	Exit Alignment Mode		Sensor returns to run mode

Table 4: Gain, receiver interface, and display configuration with the remote wire

Process		Remote Wire Procedure 0.05 ≤ sec. T ≤ 0.8 sec.	Result
Gain Method	Access Gain Mode	*From Run Mode:* 	**L** appears on 3-digit display, along with number **1** or **2**, to designate gain level
	Toggle Between Gain Settings		Number changes from number **1** to **2**, back to **1**, etc.
	Save Gain Level and Exit	*When correct level is displayed:* 	Gain level is configured: **1** = High-excess-gain setting **2** = Low-contrast setting Sensor returns to run mode
Invert Display	Invert Display		Display inverts from previous state; sensor continues in run mode
Receiver Interface Enable/Disable	Receiver Interface Enable/Disable	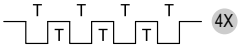	The factory default is Receiver Interface enabled. Four-pulsing the remote line saves the current settings and disables the interface (the sensor continues to operate using the saved settings; changes made to the DIP switch will have no effect). Repeating the process enables the Receiver Interface so that settings can be changed.

3.2 Gain Configuration

The EZ-ARRAY provides two gain options for straight scan applications: high excess gain and low contrast. The gain method can be selected using the receiver push button, the receiver remote teach wire, or the IO-Link v1.1 interface.

High (maximized) excess gain is suited for detecting opaque objects and for reliable sensing in dirtier environments where objects to be detected are 10 mm or larger. The high excess gain method is always used in single- and double-edge scan. The high excess gain option has a minimum blocked threshold level, which provides reliable sensing at higher excess gain levels.

The low-contrast setting is used for sensing semi-transparent materials and for detecting objects as small as 5 mm (straight scan only). In low-contrast operation, only a portion of a beam must be blocked for detection to occur. In low-contrast operation, the sensor sets an individual threshold for each optical channel during the alignment process; this process equalizes the signal strength to allow semi-transparent object detection.

When using the IO-Link v1.1 interface, low-contrast sensing provides a fine-tune sensitivity setting of 15% to 50%. When using the receiver interface, low-contrast sensitivity is always 30%.

On short range, low contrast models, sensitivity can be set between 3% to 20% when using the IO-Link v1.1 interface. When using the receiver interface, low contrast sensitivity is always 7%.

Table 5: Gain configuration settings

Gain Setting	Scan Method	EZ-ARRAY MODS [4]	EZ-ARRAY Resolution
Low Contrast	Straight Scan	5 mm	5 mm
	Single-edge Scan	-	-
	Double-edge Scan	-	-
High Excess Gain	Straight Scan	10 mm	5 mm
	Single-edge Scan	10 mm	2.5 mm
	Double-edge Scan	Depends on step size	2.5 mm / edge 5 mm total (both edges)

[4] MODS: Minimum Object Detection Size

3.3 Blanking

If a machine fixture or other equipment blocks one or more sensing beams, the affected beam channels may be blanked. The blanking option causes the receiver to ignore the status of blanked beams for measurement mode calculations.

For example, if a machine fixture blocks one or more beams during sensing, the output data will be incorrect; if the beams blocked by the fixture are blanked, the output data will be correct. Blanking may be configured using the receiver's Alignment push button, the receiver remote wire, or the IO-Link v1.1 interface.

3.4 Measurement Mode Selection

The outputs may be configured for any of the measurement (scan analysis) modes, which refer to specific beam locations, quantities of beams, or edge transitions. Note that not all measurement mode options are available when the receiver interface is used for configuration.

When using the IO-Link v1.1 interface for configuration, discrete output 2 can have NPN or PNP polarity (regardless of model), be normally open or normally closed, and be assigned to any of the measurement modes. Discrete output 1 has the same configuration options as discrete output 2, except for NPN or PNP polarity. Discrete output 1 is the IO-Link output and is a dedicated push-pull output. When using the receiver interface, limited output configuration combinations may be selected (see Configuration via DIP Switch or IO-Link v1.1 Interface on page 8).

Note: Array beams are numbered in sequence (beam 1 located nearest the sensor display). The "first beam" referenced in the following descriptions is the beam nearest the sensor display.

"Beam Location" Modes

First Beam Blocked (FBB)
The location of the first blocked beam.

First Beam Made (FBM)
The location of the first made (unblocked) beam.

Last Beam Blocked (LBB)
The location of the last blocked beam.

Last Beam Made (LBM)
The location of the last made beam.

Middle Beam Blocked (MBB)
The location of the beam midway between the first and last blocked beams.

"Beam Total" Modes

Total Beams Blocked (TBB)
The total number of blocked beams.

Total Beams Made (TBM)
The number of beams made.

Contiguous Beams Blocked (CBB)
The largest number of consecutively blocked beams.

Contiguous Beams Made (CBM)
The largest number of consecutively made beams.

Outside Dimension (OD)
The inclusive distance (measured in beams) from the first blocked beam to the last blocked beam.

Inside Dimension (ID)
The number of made beams, between the first and last blocked beams.

Transitions (TRN)
The number of changes from blocked to clear status and from clear to blocked status. (If beams 6–34 are blocked, then there is a clear-to-blocked transition from beam 5 to bream 6, and a blocked-to-clear transition from beam 34 to beam 35.) Transition mode can be used to count objects within the array.

Contiguous First Beam Blocked (CFBB)
The location of the first blocked beam in the largest group of adjacent blocked beams.

Contiguous Last Beam Blocked (CLBB)

The location of the last blocked beam in the largest group of adjacent blocked beams.

Carpet Nap and Carpet Edge

These measurement modes are used to measure the location of carpet backing and tuft and are selectable only via the IO-Link v1.1 interface and only when the Scan Type **Carpet Nap** is selected. The modes can be measured from either end of the sensor, but at least 10 beams (2 in) must be blocked from one edge.

Figure 5. Measurement mode - LBM-FBM

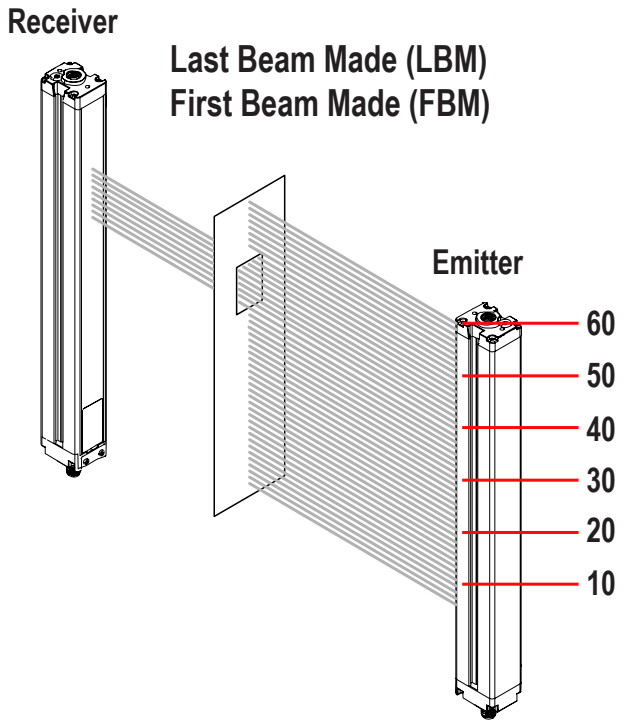

In Last Beam Made mode, the last beam is #50 of 60. In First Beam Made mode, the first beam is #40 of 60.

Figure 6. Measurement mode - LBB-FBB

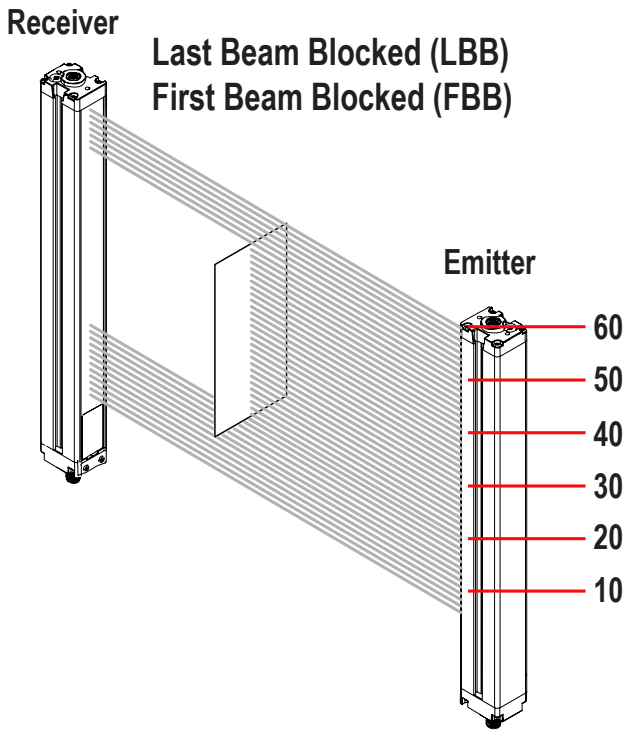

In Last Beam Blocked mode, the last beam is #55 of 60. In First Beam Blocked mode, the first beam is #20 of 60.

Figure 7. Measurement mode - TBM-TBB

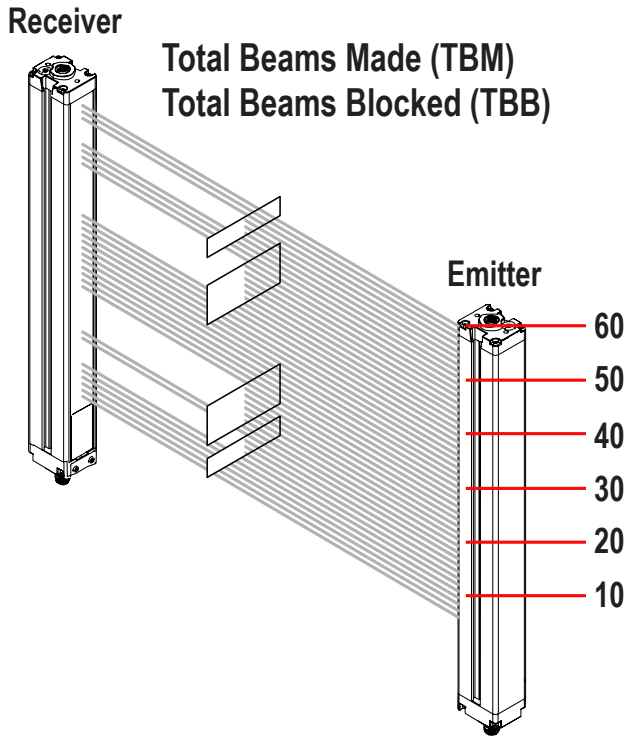

In Total Beams Made mode, 38 of 60 possible beams are made. In Total Beams Blocked mode, 22 of 60 possible beams are blocked.

3.5 Outputs

All models have two analog outputs and two discrete outputs (discrete output 1 is an IO-Link output).

The analog outputs are 0–10 V. They may be configured (via DIP switch or IO-Link interface) for either a positive or negative slope.

Discrete output 1 is always used for measurement; discrete output 2 may be used either for alarm or measurement operation (selectable via DIP switch or IO-Link interface). When the receiver interface is used, discrete output 1 and analog output 1 follow the same measurement mode. When the IO-Link interface is used for configuration, discrete output 2 has full configurability, including measurement mode, NPN or PNP polarity, and normally open or normally closed operation. Discrete output 1 has the same configurability as discrete output 2, except for NPN or PNP polarity. Discrete output 1 is a dedicated push-pull output.

3.5.1 Analog Output Configuration

Analog output configuration assigns analog outputs 1 and 2 to one of the measurement modes described in Measurement Mode Selection. When the selected measurement mode involves first or last beam blocked or made (unblocked), the assigned output will vary in proportion to the beam number identified during a scan. When the measurement mode involves total beams blocked or made, that assigned output will vary in proportion to the total beams counted during a scan.

Analog outputs may have a filter setting (to smooth the output) and Zero Value (to specify the output value when the measurement mode value is zero) set in the IO-Link v1.1 interface. For more information, refer to the IO-Link Data Reference Guide (p/n 220588).

3.5.2 Discrete Output Configuration

Discrete Output 1; Receiver Interface

When the receiver interface is used for configuration, the measurement mode assigned to discrete output 1 is the same as that assigned to analog output 1. When the analog output detects a target present, discrete output 1 conducts (normally open).

Discrete Output 2; Receiver Interface

Discrete output 2 (only) has two options: alarm and complementary (measurement) operation.

Alarm—Output 2 energizes when the receiver detects a sensor error (such as a disconnected cable) or whenever the excess gain of one or more beams becomes marginal.

Complementary (Measurement)—Discrete output 2 operation is complementary to discrete output 1 (when output 1 is ON, output 2 is OFF, and vice versa).

Discrete Output 1 and 2 Configuration; IO-Link v1.1 Interface

When the IO-Link v1.1 interface is used for configuration, the discrete outputs have more options: either discrete output can be assigned to any of the measurement modes, high and low set points can be added, the outputs can be inverted, and hysteresis values can be set, as well as a scan number to smooth output performance. Discrete output 2 can be assigned to alarm mode via the IO-Link v1.1 interface also.

Refer to the IO-Link Data Reference Guide (p/n 220588)

3.6 Scanning Method

One of three scanning methods may be configured:

- Straight Scan
- Single-edge Scan
- Double-edge Scan (1, 2, 4, 8, 16, or 32 steps)

Sensor response time is a function of sensor length and scanning method. Maximum scan times are shown in Maximum Scan Times in SIO Mode on page 15.

Scanning Method	Straight Scan		Single-Edge Scan	Double-Edge Scan (per Edge)					
				Step Size (Number of Beams)					
	Low-Contrast	High-Excess-Gain		1	2	4	8	16	32
Minimum Object Detection Size*	5 mm (0.2")	10 mm (0.4")	10 mm (0.4")	10 mm (0.4")	20 mm (0.8")	30 mm (1.2")	50 mm (2")	90 mm (3.6")	170 mm (6.8")

Scanning Method	Straight Scan		Single-Edge Scan	Double-Edge Scan (per Edge)					
	Low-Contrast	High-Excess-Gain		Step Size (Number of Beams)					
				1	2	4	8	16	32
Edge Resolution	5 mm (0.2")	5 mm (0.2")	2.5 mm (0.1")	2.5 mm (0.1")	2.5 mm (0.1")	2.5 mm (0.1")	2.5 mm (0.1")	2.5 mm (0.1")	2.5 mm (0.1")
*MODS determined using a rod target object									

3.6.1 Straight Scan

Straight Scan is the default mode, in which all beams are scanned in sequence, from the display end to the far end of the array. This scanning method provides the smallest object detection size.

Straight scan is used when low-contrast sensitivity is selected or when single-edge and double-edge scan cannot be used. The edge resolution is 5 mm (0.2 in). When low-contrast sensing is selected (used when measuring semi-transparent objects), the minimum object detection size is 5 mm (0.2 in) diameter. When high-excess-gain sensing is selected, the minimum object detection size is 10 mm (0.4 in).

3.6.2 Single-Edge Scan

Single-Edge Scan is used to measure the height of a single object. This scanning method is commonly used for box height measurement. For single-edge scan, the receiver always activates the first beam channel (or "bottom" beam, nearest the display). When the first beam is blocked, the sensor performs a binary search to hunt for the last beam blocked, as follows:

1. The receiver scans only the first beam until it is blocked.
2. When the first beam is blocked, the sensor looks to see whether the middle beam is blocked or made (unblocked).
3. If the middle beam is made (unblocked), the sensor checks the bottom quarter beam; if the middle beam is blocked, the sensor checks the top quarter beam.
4. The routine continues to divide the number of beams in half until the edge is found.

Single-edge scan can be used only for single, solid objects that block the first beam (closest to the display). Because the receiver checks only the first beam until it is blocked, single-edge scan will not function when the item to be measured does not block the first beam. Single-edge scan is also ineffective if the object does not present a continuous blocked pattern.

Single-edge scan works only when the high-excess-gain setting is enabled. When single-edge scan is selected, the sensor object detection size is 10 mm and edge resolution is 2.5 mm.

3.6.3 Double-Edge Scan

Double-edge scan is used to detect two edges of a single object, for example, to determine box width measurements. Double-edge scan requires the selection of a step size: 1, 2, 4, 8, 16 or 32 beams.

The sensor uses the steps to "skip" over beams, as follows:

1. The sensor activates beam 1 (closest to the sensor display end).
2. The sensor activates the next beam, determined by the step size. (For example, if the step size is 2, beam 3 is next; if the step size is 8, beam 9 is next.)
3. As long as the activated beam is made (unblocked), the sensor continues the stepping routine until a blocked beam is found.
4. When a blocked beam is found, a binary search is conducted to find the object's "bottom" edge.
5. When the bottom edge is found, the sensor continues to step through the array until it finds the next unblocked beam.
6. Another binary search is performed to find the second edge.

Similar to single-edge scan, double-edge scan has some restrictions: the object should provide a solid obstruction; the size of the object determines the maximum step size. Double-edge scan can be used to detect up to three objects. Like single-edge scan, double-edge scan works only when the high-excess-gain setting is selected. When double-edge scan is selected, the sensor object detection size varies, depending on the step size, but edge resolution is 2.5 mm.

Figure 8. Double-edge scan

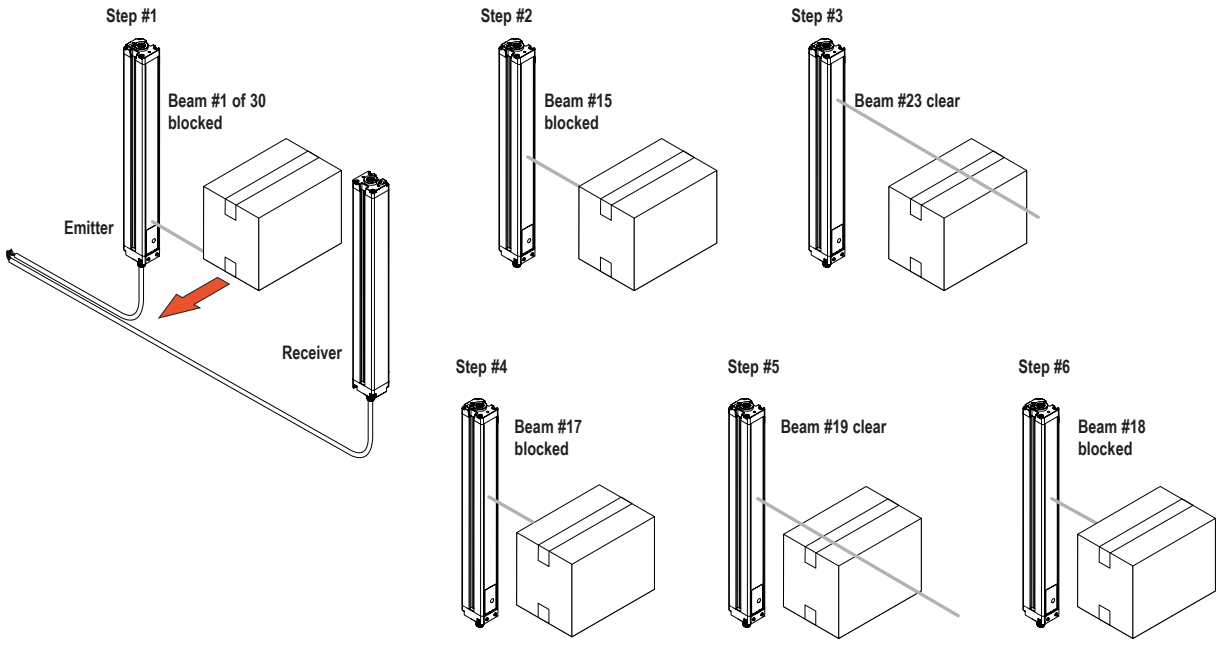

3.6.4 Maximum Scan Times in SIO Mode

Table 6: Maximum scan times (in milliseconds) during SIO mode

Array Length	Straight Scan	Single-Edge Scan	Double-Edge Scan					
			Step 1 Beam	Step 2 Beams	Step 4 Beams	Step 8 Beams	Step 16 Beams	Step 32 Beams
150 mm (5.9 in)	2.8	1.5	3.4	2.8	2.5	2.4	1.9	N/A
300 mm (11.8 in)	5.0	1.5	5.9	4.1	3.2	2.8	2.3	2.1
450 mm (17.7 in)	7.1	1.6	8.5	5.5	4.2	4.0	3.2	2.5
600 mm (23.6 in)	9.3	1.6	11.0	6.8	4.9	4.2	4.0	2.8
750 mm (29.5 in)	11.4	1.7	13.5	8.1	5.7	4.6	4.5	4.5
900 mm (35.4 in)	13.6	1.7	16.0	9.5	6.1	4.7	4.6	4.6
1050 mm (41.3 in)	15.7	1.8	18.6	10.8	6.8	5.2	4.8	4.8
1200 mm (47.2 in)	17.9	1.8	21.1	12.2	7.4	5.5	4.9	4.9
1500 mm (59.1 in)	22.2	1.9	26.1	14.8	9.0	6.4	5.3	4.9
1800 mm (70.9 in)	26.5	2.0	31.2	17.5	10.5	7.3	6.0	5.6
2100 mm (82.7 in)	30.8	2.8	36.3	20.2	12.0	8.2	6.7	5.6
2400 mm (94.5 in)	35.1	2.8	41.4	22.9	13.5	9.1	7.4	5.9

When communicating over IO-Link, there is a minimum cycle time of 18 ms for COM2 or 6 ms for COM3. The maximum scan time will be the greater between the SIO scan time and the IO-Link cycle time.

Scan times are also dependent on analog filter speed; see the IO-Link Data Reference Guide (p/n 220588).

4 Installation Instructions

4.1 Mounting the Emitter and Receiver

Compact EZ-ARRAY emitters and receivers are easy to handle during mounting. When mounted to the sensor end caps, the supplied mounting brackets allow ±30° rotation. An emitter may be separated from 400 mm to 4 m (16 in to 13 ft) from its receiver.

From a common point of reference, make measurements to locate the emitter and receiver in the same plane, with their midpoints and display ends directly opposite each other. (If sensors are mounted with their display ends at the top, see Receiver Gray (Remote Teach) Wire on page 8 or refer to HW Interface table in Configuration via DIP Switch or IO-Link v1.1 Interface on page 8 for directions on inverting the 3-digit display.) Mount the brackets to the emitter and receiver housings using the supplied M6 bolts and Keps nuts, or user-supplied hardware.

Center mounting brackets must be used with longer sensors, if they are subject to shock or vibration. In such situations, the sensors are designed to be mounted with up to 900 mm unsupported distance (between brackets). Sensors 1050 mm and longer are supplied with a center bracket to be used as needed with the standard end-cap brackets.

1. Attach the center bracket to the mounting surface when mounting the end-cap brackets.
2. Attach the clamp to both slots of the housing, using the included M5 screws and T-nuts.
3. After the sensor is mounted to the end-cap brackets, attach the clamp to the center bracket using the supplied M5 screw.

EZ-ARRAY End-Cap Brackets (supplied with each emitter and receiver)		Swivel Center Bracket (supplied with emitters and receivers 1050 mm and longer)
Figure 9. End-Mounted	*Figure 10. Side-Mounted (two sensor brackets may be substituted)*	*Figure 11. Sensors are designed to be mounted with up to 900 mm unsupported distance between brackets.*
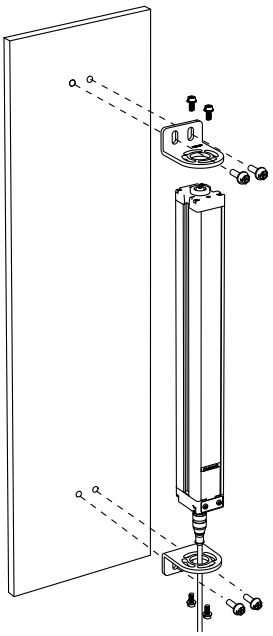	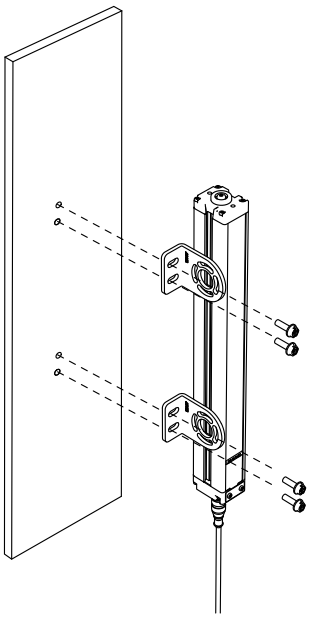	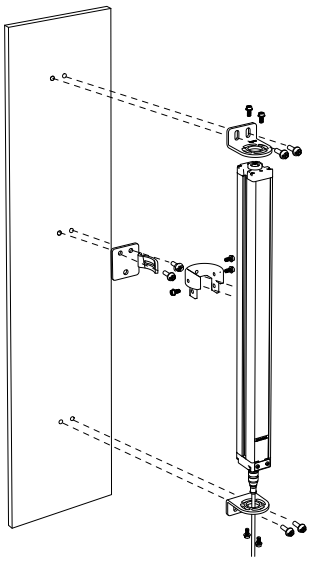

Note: Sensor brackets are designed to mount directly to accessory MSA series stands using the hardware supplied with the stands.

4.2 Mechanical Alignment

Mount the emitter and receiver in their brackets and position the windows of the two units directly facing each other. Measure from one or more reference planes (e.g., the building floor) to the same point(s) on the emitter and receiver to verify their mechanical alignment.

Use a carpenter's level, a plumb bob, or the optional **LAT-1-SS** Laser Alignment Tool, or check the diagonal distances between the sensors, to achieve mechanical alignment.

Figure 12. Mechanical alignment

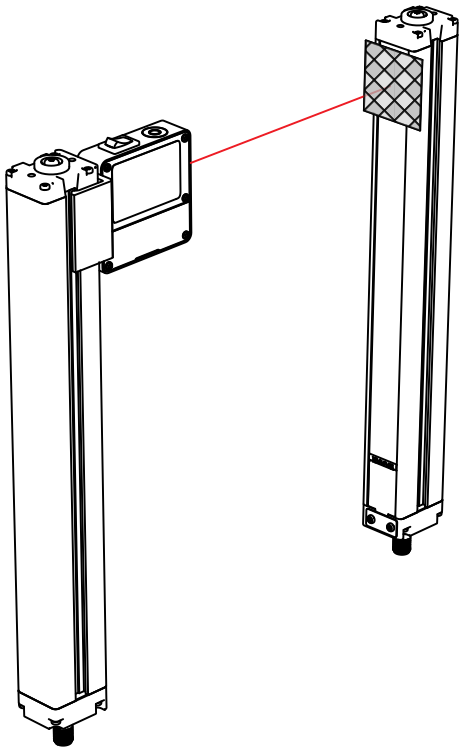

When alignment is difficult, use alignment tool **LAT-1-SS** to assist or confirm alignment by providing a visible red dot along the sensor's optical axis. Snap the **LAT-1** clip onto the sensor housing, turn on its laser emitter, and use a strip of retroreflective tape at the opposite sensor to see the dot.

Also check "by eye" for line-of-sight alignment. Make any necessary final mechanical adjustments, and hand-tighten the bracket hardware. See Optical Alignment on page 19 and Alignment/Blanking Button (Electronic Alignment) on page 22 for further alignment information.

Verify that:

- The emitter and receiver are directly opposite each other, and nothing is interrupting the beams.
- The sensing area is the same distance from a common reference plane for each sensor.
- The emitter and receiver are in the same plane and are **level/plumb and square to each other** (vertical, horizontal, or inclined at the same angle, and not tilted front-to-back or side-to-side).

Figure 13. Verify the emitter and receiver are in the same plane and level/square to each other

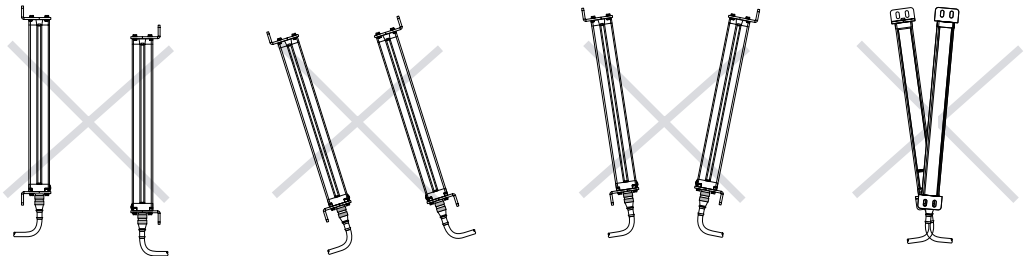

For **angled or horizontal Installations,** verify that:

- Distance X at the emitter and receiver are equal.
- Distance Y at the emitter and receiver are equal.
- Distance Z at the emitter and receiver are equal from parallel surfaces.
- Vertical face (i.e., the lens) is level/plumb.
- Sensing area is square. Check diagonal measurements if possible; see Figure 15 on page 18.

Figure 14. Angled or horizontal installations

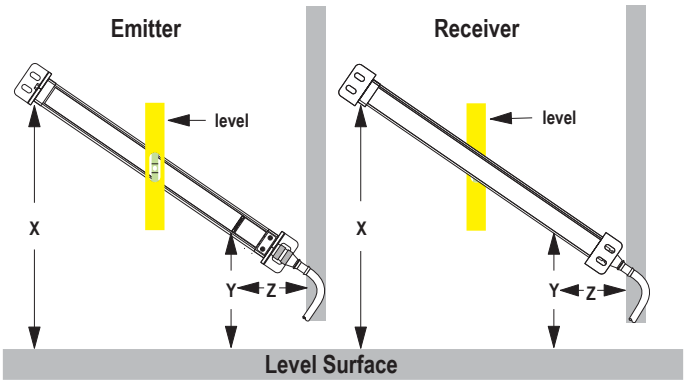

For **vertical installations,** verify that:

- Distance X at emitter and receiver are equal.
- Both sensors are level/plumb (check both the side and face).
- Sensing area is square. Verify diagonal measurements if possible (Diagonal A = Diagonal B).

Figure 15. Vertical installations

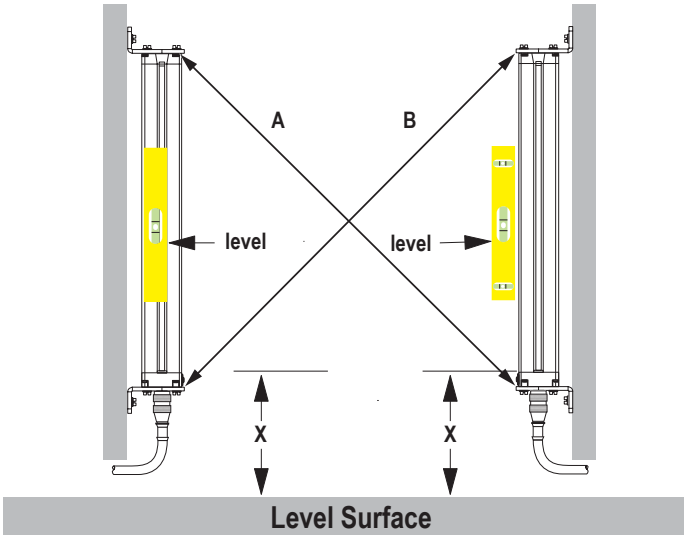

4.3 Wiring Diagrams

Sync (Pink) Wire: The emitter and receiver are electrically synchronized via the pink wire. The emitter and receiver pink wires must only be electrically connected together.

Inputs

Receiver gray wire—The receiver has an input that can be used as a gate input or for remote teach. To initiate remote teach, alignment, and gating functions, tie the wire through a switch to sensor common. See Receiver Gray (Remote Teach) Wire on page 8 for more information.

Outputs

Analog white and yellow wires—The receiver has two analog outputs. Both outputs are voltage analog outputs. The white wire is referenced as analog output 1; the yellow wire is referenced as analog output 2. The voltage analog outputs will source current through an external load to sensor common.

Discrete Outputs—The receiver has two discrete outputs; the green wire is referenced as discrete output 1, and the red wire is referenced as discrete output 2. Discrete output 1 is a push-pull output. Discrete output 2 is PNP, unless the polarity is altered via the communication interface. Refer to Specifications on page 27 for further electrical requirements.

Figure 16. PNP Outputs without IO-Link Master

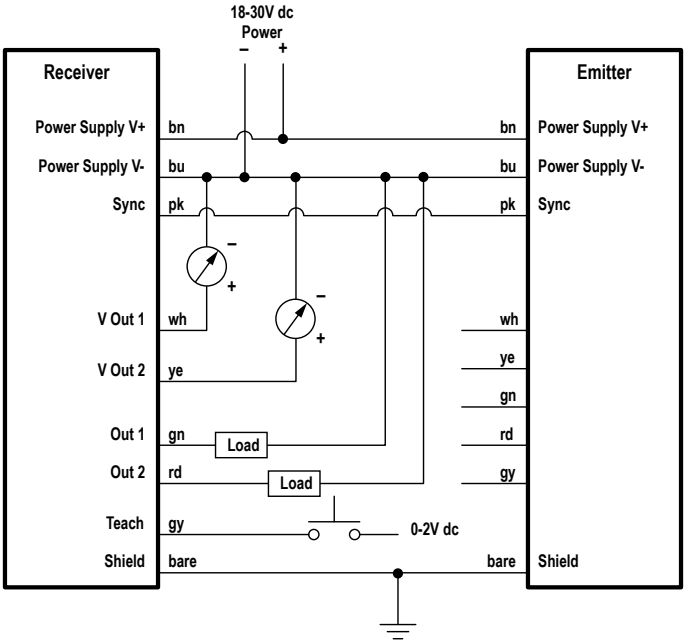

Figure 17. Wiring with an IO-Link Master

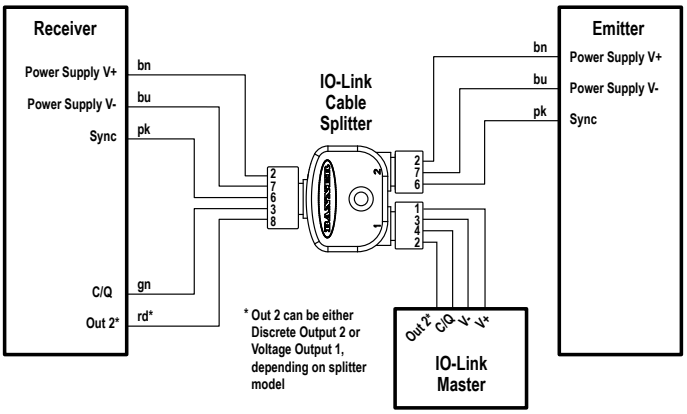

4.4 Optical Alignment

The objective of the optical alignment process is to adjust the emitter light level to maximize sensor performance. Perform the alignment procedure at installation and again whenever the emitter and/or receiver is moved.

During the alignment procedure, the receiver polls each beam channel to measure excess gain and performs a gain adjustment for each beam. When the system exits the alignment procedure, each channel's signal strength is stored in non-volatile memory.

The procedure can be performed using the receiver remote wire, the receiver interface push button or the IO-Link v1.1 interface. (See Receiver Gray (Remote Teach) Wire on page 8 and Alignment/Blanking Button (Electronic Alignment) on page 22.) The receiver's Alignment push button may be disabled, by configuration thru the IO-Link v1.1 interface.

1. After the electrical connections are made, power up the emitter and receiver.
2. Verify that input power is present to both emitter and receiver; the emitter Status indicator and the receiver Status LED should be ON green. If the receiver Status LED is on red (and a "**c**" appears on the 3-digit display), refer to the error codes. (Error Codes on page 26)

Note: At power-up, all Zone indicators are tested (flash red), then the number of blocked beams is displayed.

3. Observe the receiver indicators.
4. Optimize Alignment and Maximize Excess Gain:

a. Verify that the emitter and receiver are pointed squarely at each other. A straightedge or level can help determine the direction the sensor is facing.
b. Slightly loosen the sensor mounting screws and rotate one sensor to the left and right, noting the positions where the receiver Zone indicators turn from green to red; repeat with the other sensor.
c. Center each sensor between the noted positions and tighten the end cap mounting screws, making sure to maintain the positioning. The sensor windows should directly face each other.

5. After optimum optical alignment is verified, proceed to configuration, via the remote teach wire, the receiver interface, or the IO-Link v1.1 interface (Receiver Gray (Remote Teach) Wire on page 8, Alignment/Blanking Button (Electronic Alignment) on page 22, or refer to the Alignment/Blanking Button (Electronic Alignment) on page 22) and complete the electronic alignment. This further alignment step adjusts the emitted light level of each beam for the application, to maximize sensing performance.

Figure 18. Optical alignment

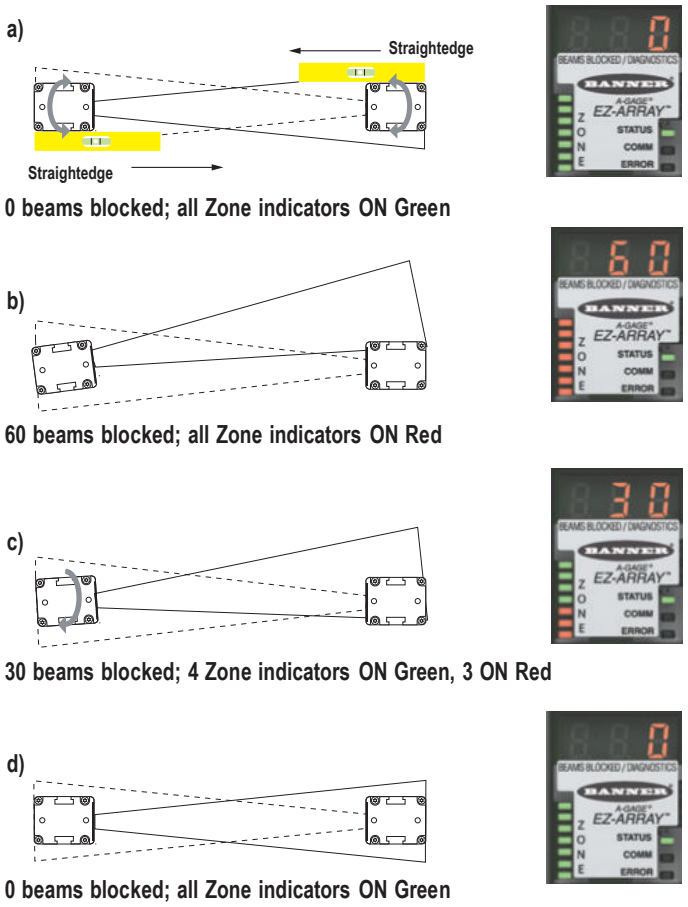

Table 7: Receiver interface indicators during alignment

	All Beams Either Clear or Blanked	Some Beams Blocked or Mis-Aligned	Out of Alignment
Zone Indicators	All ON Green	Some ON Red (zones with blocked beams) Some ON Green (zones with all clear beams)	All ON Red (Some beams blocked in each zone)
Receiver Status Indicator	ON Green	ON Green	ON Green
3-Digit Display	0 (Number of blocked beams)	Number of blocked beams	Total number of beams in the array

5 Receiver User Interface

The receiver user interface comprises the six-position DIP switch, two push buttons, 3-digit display, and other indicators present on the receiver (see Status Indicators for more complete status indicator information). The receiver interface enables configuration of standardized combinations of the EZ-ARRAY sensing options (output configuration, scanning methods and modes); for more advanced configuration, refer to IO-Link Interface.

5.1 Configuration DIP Switches

Use the DIP switches to configure the sensor.

Access the switch by removing the screw-on security plate and lifting the clear hinged access cover. The access cover may be removed entirely (pull straight out to remove, press back in to replace) for easier access during configuration.

Some of the switches are assigned their own functions, others work together in combination.

- Switches S1 and S2 in combination select one of four scanning modes.
- Switches S3 and S4 in combination select one of four measurement mode pairs (one for each analog output).
- Switch S5 defines the analog slope setting for both analog outputs and S6 defines whether discrete output 2 is complementary to discrete 1 or functions as an alarm (when configuration is accomplished via DIP switch, discrete output 1 conducts when analog output 1 senses the target).

Figure 19. All DIP switches are shown in the on (default) position

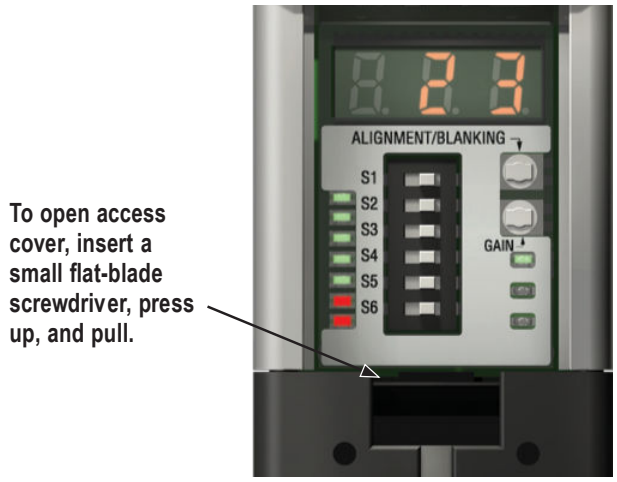

Table 8: Receiver DIP switches

Description	Receiver User Interface DIP Switches					
	S1	S2	S3	S4	S5	S6
Scan Mode: Straight Scan (default setting)	ON	ON				
Scan Mode: Double-Edge, Step 1	ON	OFF				
Scan Mode: Double-Edge, Step 4	OFF	ON				
Scan Mode: Single-Edge	OFF	OFF				
Analog 1 TBB; Analog 2 FBB (default setting)			ON	ON		
Analog 1 LBB; Analog 2 MBB			ON	OFF		
Analog 1 OD; Analog 2 ID			OFF	ON		
Analog 1 CBB; Analog 2 CFBB			OFF	OFF		
Positive Analog Slope (default setting)					ON	
Negative Analog Slope					OFF	
Discrete 2 Complementary (default setting)						ON
DIscrete 2 Alarm						OFF

5.1.1 Scanning Modes (S1 and S2)

See Maximum Scan Times in SIO Mode on page 15 for scan times.

Double-Edge Step 1 (S1 ON, S2 OFF)

Double-Edge Step 1 can be used when three or fewer opaque objects are presented to the light curtain at one time. The advantage of this mode is improved sensor edge resolution (2.5 mm). The minimum object detection size is 10 mm.

Double-Edge Step 4 (S1 OFF, S2 ON)

Double-Edge Step 4 can be used when three or fewer opaque objects are presented to the light curtain and the minimum size object to be detected is 30 mm. This scanning mode ignores objects smaller than 30 mm. Like Double-Edge Step 1, the sensor edge resolution is 2.5 mm.

Single-Edge Scan (S1 OFF, S2 OFF)

Single-Edge Scan can be used when a single opaque object is presented to the light curtain at one time. The object must block the "bottom" channel (the channel closest to the receiver display). Like the double-edge scans, the sensor edge resolution is 2.5 mm. The minimum object detection size is 10 mm. Because single-edge scan is capable only of measuring the height of an opaque object that blocks the bottom channel and all channels up to the height of the object, the pertinent measurement modes are LBB (last beam blocked) or TBB (total beams blocked). When single-edge scan is selected, the selected measurement mode will be applied to both analog outputs. Selection of OD/ID with single-edge scan will result in an error code.

Straight Scan (S1 ON, S2 ON)

Straight Scan is the most versatile scanning mode and can be used without the exceptions noted in the other scanning modes. Use this scanning mode when using the low-contrast sensitivity setting to measure semi-transparent materials.

5.1.2 Measurement Modes (S3 and S4)

The measurement modes, determined by switches S3 and S4 in combination, define what information is calculated by the sensor and sent via the analog outputs. See Measurement Mode Selection for measurement mode definitions. Discrete output 1 will conduct when analog output 1 detects the target. (If single-edge scan is selected, select measurement mode LBB or TBB.)

During normal operation, the 3-digit diagnostic display reads out the numerical value of the specified measuring mode for analog output 1.

5.1.3 Analog Slope (S5)

Switch S5 defines the analog output slope. As the measurement mode values increase, the analog output voltage can either increase (positive slope, S5 ON) or decrease (negative slope, S5 OFF). Switch S5 applies the same slope to both analog outputs.

5.1.4 Complementary/Alarm (S6)

Switch S6 defines the operation of discrete output 2. When the receiver user interface is used, discrete output 1 is active when an object is detected by the sensor (normally open operation). In complementary mode (S6 ON), output 2 will always be in the opposite state of output 1. In alarm mode (S6 OFF), discrete output 2 will be active when the sensor detects a system fault. System faults include a failed emitter, mis-wiring of the emitter/receiver communication wire (the pink wire), and low excess gain (if the sensor is configured for high-contrast sensitivity).

5.2 Alignment/Blanking Button (Electronic Alignment)

The Alignment/Blanking push button is used both to maximize the alignment and to access the blanking feature. The electronic alignment routine adjusts the emitted light level to maximize sensor performance. Perform the procedure at installation and again when the emitter and/or receiver is moved. For IO-Link interface alignment instructions, see Alignment and Blanking.

Blanking is used to maintain sensing accuracy in applications where a fixed object (for instance a permanently mounted bracket) will block one or more beams. The sensor will ignore the blanked channels when calculating outputs from the selected measurement modes.

5.2.1 Electronic Alignment and Blanking - Receiver Interface

To initiate the electronic alignment procedure, use a small screwdriver to press the Alignment/Blanking button for two or more seconds. The left-hand digit of the 3-digit display will read "**A**" (representing alignment); the right two digits will show the number of beams blocked. The receiver is learning the clear condition. Rotate the sensors as required (but do not change the distance between them). When the receiver's 3-digit display shows 0 beams blocked, the sensors are adequately aligned.

Tighten the sensor mounts, then press the Alignment/Blanking button again for two seconds to exit alignment mode. If all sensor light channels are clear, the EZ-ARRAY stores each channel's signal strength in non-volatile memory and reads "**- - -**" on the 3-digit display. Re-alignment is not required again, unless the emitter or receiver is moved.

If any beams are blocked by objects other than the sensing target to be measured during run mode, those beams can be blanked in alignment mode for more accurate measurement. The blocked beams must be either blanked or cleared during alignment mode for alignment to proceed (see below). While the "**A**" is visible on the receiver display, momentarily (about 0.5 seconds max.) press the Alignment/Blanking button again. The "**A**" will change to "**n**" to indicate the sensor is ready to "learn" the blanking pattern; momentarily press the button again to exit the blanking routine. The sensor blanks the blocked beams and the display changes to "**A.**"; the period following the lefthand digit signifies blanking is active. Press the Alignment/Blanking button for two seconds to exit alignment mode. The EZ-ARRAY stores each channel's signal strength in non-volatile memory and reads "**-. - -**" on the 3-digit display to denote blanking is in use.

5.2.2 Flashing "000" on the 3-Digit Display

When returning to run mode, the receiver determines whether any unblanked beam channels are obstructed. If any channels are obstructed, the new alignment settings are not saved; the receiver flashes zeroes on the display three times and sensing will continue, using the previously set alignment settings. If this occurs, either clear the blocked beams and repeat the alignment routine or repeat the alignment routine and blank the blocked beams.

5.3 Gain (Sensitivity Adjust) Button

To change the sensitivity (Gain setting), press and hold the button for two seconds. The left-hand digit of the 3-digit display will read "$_{L}$"; the right-hand digit will read "**1**" (high excess-gain) or "**2**" (low-contrast). The sensitivity level can then be toggled between the values 1 and 2. When the desired sensitivity level is displayed, hold the Gain push button for 2 seconds and the sensor will return to run mode.

5.4 Inverting the 3-Digit Display

When the sensors is mounted in an inverted position, invert the 3-digit display for readability. For instructions, see Receiver Gray (Remote Teach) Wire on page 8. The periods on the three seven-segment indicators do not move when the display is inverted.

6 Additional Information

6.1 IO-Link Overview

For the latest IO-Link protocol and specifications, please visit the web site at http://www.io-link.com

IO-Link is a point-to-point communication link between master and slave. It can be used to automatically parameterize sensors and transmit process data.

6.2 IO-Link v1.1 Profile and Models

Parameter	Value
IO-Link revision	V1.1
Process Data In length	240-bit
Process Data Out length	None
Bit Rate (COM2) [5]	38,400 bps
Bit Rate (COM3)	230,400 bps
Minimum cycle time (COM2) [5]	18 ms
Minimum cycle time (COM3)	6 ms
Device ID (COM2) [5]	65550
Device ID (COM3)	65551

Parameter	Value
Port class	A
SIO mode	Yes
Smart sensor profile	No
Block parameterization	No
Data Storage	Yes
ISDU Supported	Yes

Note:

- When switching between COM modes, the EZ-ARRAY needs a power cycle to recognize and reconnect at the new baud rate. Make sure both IODD files are loaded into the master.
- COM3 is only supported by certain IO-Link masters. If your master does not support COM3 and the EZ-ARRAY is changed to COM3, you will not be able to communicate with the device. Refer to your IO-Link master instruction manual before making changes to your EZ-ARRAY.

6.3 Hardware Interface

IO-Link is designed around IEC 61131-9 Single-drop digital communication interface for sensors and actuators (SDCI). The figure below shows the SDCI connection for 3-wire connection devices. Power, ground, communication, and/or switching signal are required, pin 2 is an optional I/O. The EZ-ARRAY provides the SDCI connection with an IO-Link cable splitter accessory. The EZ-Array is a Port Class A device.

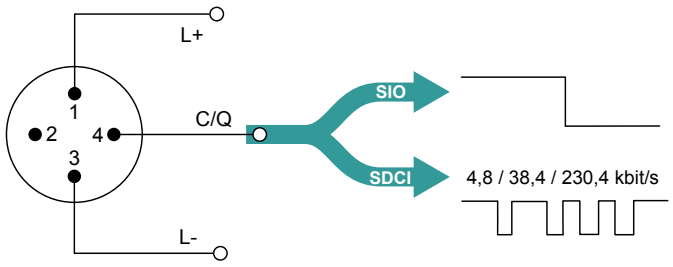

Pin	Signal	Definition	Standard
1	L+	24 V	IEC 61131-2
2	I/Q	Not connected, DI, or DO	IEC 61131-2
3	L-	0 V	IEC 61131-2
4	Q	“Switching signal” DI, DO (SIO)	IEC 61131-2
	C	“Coded switching” (SDCI)	IEC 61131-9

[5] COM2 is the default communication speed.

6.3.1 Electrical Interface

IO-Link Splitter Connector #1	CSB-M1240M1280 (Dual Discrete) Pinouts				CSB-M1250M1280 (Analog) Pinouts			
	EZ-ARRAY 8-Pin Connector	8-Wire Cable	Signal	Definition	EZ-ARRAY 8-Pin Connector	8-Wire Cable	Signal	Definition
1	2	Brown	L+	18-30 VDC	2	Brown	L+	18-30 VDC
2	8	Red	Q	Switching Signal D02	1	White	AO	V Out 1 (0-10V)
3	7	Blue	L-	0 VDC	7	Blue	L-	0 VDC
4	3	Green	Q	Switching Signal DO1 (SIO)	3	Green	Q	Switching Signal DO1 (SIO)
			C	IO-Link (SDCI)			C	IO-Link (SDCI)
5	N.C.	N.C.	N.C.	No Connection	N.C.	N.C.	N.C.	No Connection

IO-Link Splitter	CSB-M1240M1280 is shown, for CSB-M1250M1280 pin 1 is connected



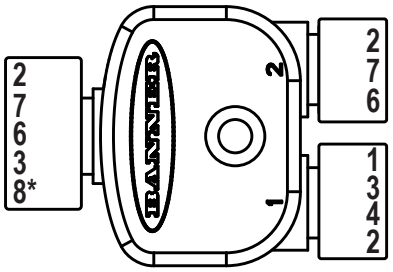

Note: If an additional cable between the receiver and splitter is required, its length must be less than a meter.

6.3.2 IO-Link Master

A list of IO-Link Master manufacturers can be found under the About Us at www.io-link.com.

6.4 IODD (IO-Link Device Description) and Parameters

An IODD file is a file that formally describes a device using XML notation. The IODD provides all the necessary properties to establish communication and configuration. The EZ-ARRAY IO-Link IODD package consists of an IODD file, and three image files:

- If using COM2, use Banner_Engineering-EA5Rxxx0XK2Q-COM2-20210402-IODD1.1.xml
- If using COM3, use Banner_Engineering-EA5Rxxx0XK3Q-COM3-20210820-IODD1.1.xml
- Banner_Engineering-logo.png
- Banner_Engineering-EA5RXK-icon.png
- Banner_Engineering-EA5RXK-pic.png

For detailed information on the IODD file interface and parameters, see IO-Link Data Reference Guide EZ-ARRAY v1.1 (p/n 220588). For the latest IODD packages, please refer to the Banner website at http://www.bannerengineering.com/IO-Link.

7 Troubleshooting

7.1 Error Codes

If the receiver Status LED is red and the 3-digit display reads "**c**" followed by a number from **1** to **10**, a corrective action is needed.

Error Code	Problem	Corrective Action
1	Receiver EEPROM Hard Failure	This problem is caused by a receiver failure that cannot be corrected by the user. Replace the receiver.
2	Receiver Alignment/Blanking Configuration Error	Remove and re-apply sensor supply voltage. If the error code 2 is removed, electrically re-align the sensor (Alignment/Blanking Button (Electronic Alignment) on page 22). If the error code persists, contact Banner for further problem-solving techniques.
3	Reserved for Factory	Replace the receiver.
4	Emitter or Wiring Problem	1. Verify the emitter and receiver wiring is correct (see Wiring Diagrams on page 18). 2. Check the status of the emitter Status LED. • **Emitter LED OFF**—Check the voltage across the emitter brown and blue wires. If the voltage across the emitter brown and blue wire is OK, then replace the emitter. • **Emitter Status LED flashing (approx. every 2 seconds)**—Verify that the emitter/receiver sync (pink) wires are correctly installed. 3. Verify the sync wires are correctly installed. Check the sync wire DC voltage. If the voltage is below 1 volt or above 3 volts, then again check the sync wire for possible mis-wiring. Unplug first the receiver and then the emitter to determine the problem source.
5	Emitter Channel Error	The emitter has identified a nonfunctional optical channel. **Temporary fix**—Blank the channel (Section Alignment/Blanking Button (Electronic Alignment) on page 22) to ignore the problem **Permanent fix**—Replace the emitter
6	Reserved for Factory	Replace the receiver
7	Reserved for Factory	Replace the emitter
8	Reserved for Factory	Replace the receiver
9	Reserved for Factory	Replace the receiver
10	Incompatible Scan and Measurement Mode	Some measurement modes are incompatible with some scanning modes. **Single-Edge Scan; do not use the following measurement modes**—OD, ID, FBM, LBM, TBM, CBM, Nap Detection **Double-Edge Scan; do not use the following measurement modes**—FBM, LBM, TBM, CBM, Nap Detection

7.2 "Dirty" Channel Indicator

If the Status LED is red, but no "c" is visible on the 3-digit display (the scan measurement mode result is displayed), the sensor alignment is marginal. Clean the sensor windows and perform the alignment procedure as necessary. For all corrective actions, first verify proper supply voltages and wiring connectivity. Disconnect and re-connect the sensor cable connectors to verify proper connector installation.

8 Specifications

Emitter/Receiver Range

Standard models: 400 mm to 4 m (16 in to 13 ft)

Supply Power Requirements

Emitter/Receiver Pair (Exclusive of Discrete Load): Less than 9 W
Power-up delay: 2 seconds

Current Draw at 24 V DC

Length (mm)	Emitter (mA)	Receiver (mA)
150	10	10
300	20	25
450	30	40
600	40	60
750	50	75
900	60	90
1050	70	105
1200	80	120
1350	85	135
1500	95	150
1650	105	170
1800	115	185
1950	125	200
2100	135	215
2250	140	230
2400	150	245

Sensor Positional Resolution

Straight Scan: 5 mm (0.2 in)
Double-Edge Scan: 2.5 mm (0.1 in)
Single-Edge Scan: 2.5 mm (0.1 in)

Two Analog Outputs

Voltage Sourcing: 0 to 10 V (maximum current load of 5 mA)

Scan Time

Scan times depend on scan mode and sensor length. Straight scan times range from 2.8 to 26.5 ms. For all combinations, see Maximum Scan Times in SIO Mode on page 15.

Process Data

Available Process Data depends on what scan mode the sensor is in.
Straight Scan
- Active Measurements Only
- Straight Scan Measurements
- Channel States/Reduced States

Single Edge Scan
- Edge Scan Measurements
- Active Measurements Only

Double Edge Scan
- Edge Scan Measurements
- Active Measurements Only

Channel states show individual blocked or clear channel states. Lengths > 1200 mm have logical OR pairs or logical AND pairs, for example, CH1+CH2, CH3+CH4, etc.

IO-Link Interface

Baud Rate: 38,400 bps for COM2; 230,400 bps for COM3
Process Data Width: 240 bits

Minimum Object Detection Size

Straight Scan, Low-Contrast: 5 mm (0.2 in)
Straight Scan, High-Excess-Gain: 10 mm (0.4 in)
See Scanning Method on page 13 for other scan mode values; size is tested using a rod.

Beam Spacing

5 mm (0.2 in)

Field of View

Nominally ±3°

Light Source

Infrared LED

System Configuration (Receiver Interface)

6-position DIP switch: Used to set scanning type, measurement modes, analog slope, and discrete output 2 function (see Configuration via DIP Switch or IO-Link v1.1 Interface on page 8)
Push Buttons: Two momentary push buttons for alignment and gain level selection

System Configuration

IO-Link Interface: Supplied IODD files provide all configuration options of receiver interface, plus additional functionality

Supply Voltage (Limit Values)

Emitter: 12 V DC to 30 V DC
Receiver Models: 18 V DC to 30 V DC

Teach Input (Receiver Gray Wire)

Low: 0 to 2 V
High: 6 to 30 V or open (input impedance 22 K ohms)

Two Discrete Outputs

Protected against false pulse on power-up and continuous overload or short circuit.

Discrete Output 1 (SIO Mode)

Type: Solid-State Push-Pull
Rating: 100 mA maximum (sourcing or sinking)
ON-State Saturation Voltage: less than 3 V at 100 mA (sourcing or sinking)

Discrete Output 2

Type: Solid-State NPN or PNP (current sinking or sourcing)
Rating: 100 mA maximum
OFF-State Leakage Current: NPN: less than 200 µA at 30 V DC; PNP: less than 10 µA at 30 V DC
ON-State Saturation Voltage: NPN: less than 1.6 V at 100 mA; PNP: less than 2.0 V at 100 mA

Connections

IO-Link Interface: The receiver uses a cable splitter that converts the 8-pin connector to a compatible M12 IO-Link connector
Other sensor connections: 8-conductor quick-disconnect cables (one each for emitter and receiver), ordered separately; PVC-jacketed cables measure 5.8 mm diameter, have shield wire; 22-gauge conductors

Construction

Aluminum housing with clear-anodized finish; acrylic lens cover

Environmental Rating

IP65

Operating Conditions

–40 °C to +70 °C (–40 °F to +158 °F)
95% at +50 °C maximum relative humidity (non-condensing)

Certifications

Banner Engineering Europe Park Lane, Culliganlaan 2F bus 3, 1831 Diegem, BELGIUM

Turck Banner LTD Blenheim House, Blenheim Court, Wickford, Essex SS11 8YT, Great Britain

8.1 FCC Part 15

This device complies with Part 15 of the FCC Rules. Operation is subject to the following two conditions: 1) This device may not cause harmful interference; and 2) This device must accept any interference received, including interference that may cause undesired operation.

8.2 Industry Canada

This device complies with CAN ICES-3 (A)/NMB-3(A). Operation is subject to the following two conditions: 1) This device may not cause harmful interference; and 2) This device must accept any interference received, including interference that may cause undesired operation.

Cet appareil est conforme à la norme NMB-3(A). Le fonctionnement est soumis aux deux conditions suivantes : (1) ce dispositif ne peut pas occasionner d'interférences, et (2) il doit tolérer toute interférence, y compris celles susceptibles de provoquer un fonctionnement non souhaité du dispositif.

8.3 Emitter and Receiver Dimensions

All measurements are listed in millimeters, unless noted otherwise.

Figure 20. Dimensions drawing

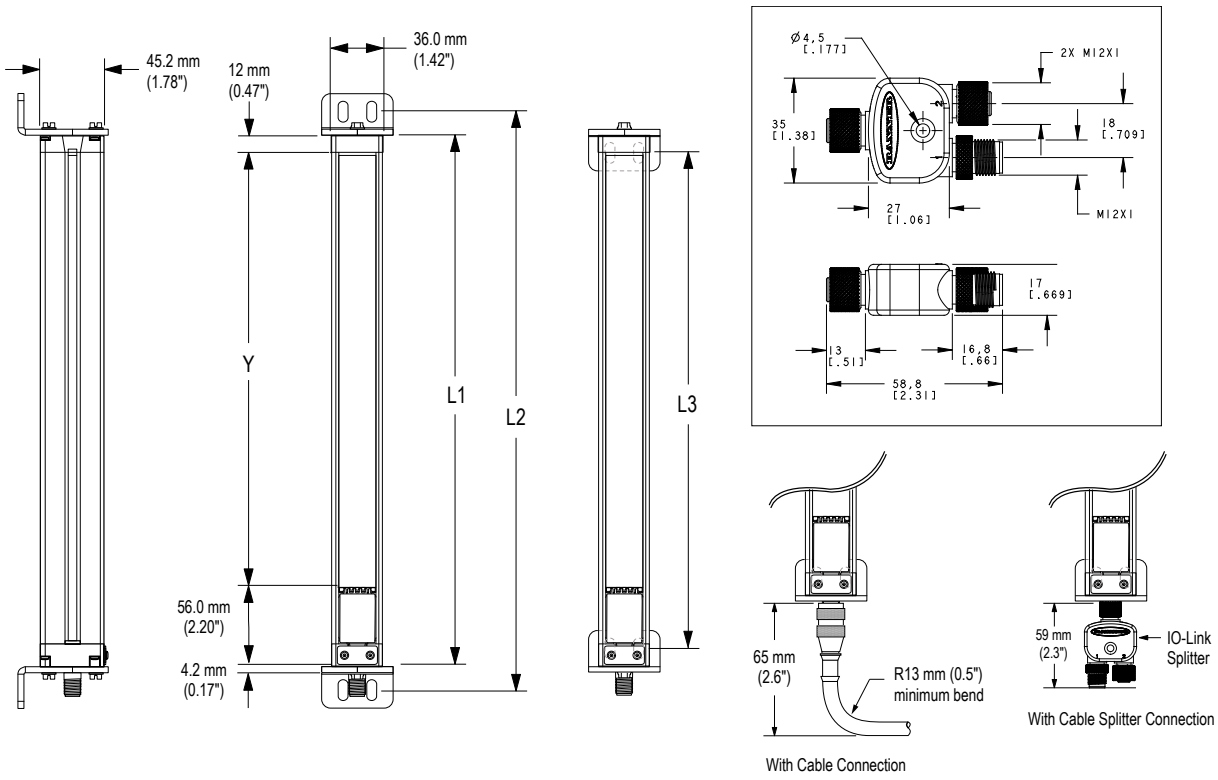

Table 9: Dimensions for each model

Emitter or Receiver Model	Housing Length L1	Distance Between Bracket Holes L2 L3		Defined Area Y
EA5..150..	227 mm (8.9 in)	260 mm (10.2 in)	199 mm (7.8 in)	150 mm (5.9 in)
EA5..300..	379 mm (14.9 in)	412 mm (16.2 in)	351 mm (13.8 in)	300 mm (11.8 in)
EA5..450..	529 mm (20.8 in)	562 mm (22.1 in)	501 mm (19.7 in)	450 mm (17.7 in)
EA5..600..	678 mm (26.7 in)	704 mm (27.7 in)	650 mm (25.6 in)	600 mm (23.6 in)
EA5..750..	828 mm (32.6 in)	861 mm (33.9 in)	800 mm (31.5 in)	750 mm (29.5 in)
EA5..900..	978 mm (38.5 in)	1011 mm (39.8 in)	950 mm (37.4 in)	900 mm (35.4 in)
EA5..1050..	1128 mm (44.4 in)	1161 mm (45.7 in)	1100 mm (43.3 in)	1050 mm (41.3 in)
EA5..1200..	1278 mm (50.3 in)	1311 mm (51.6 in)	1250 mm (49.2 in)	1200 mm (47.2 in)
EA5..1500..	1578 mm (62.1 in)	1611 mm (63.4 in)	1550 mm (61.0 in)	1500 mm (59.1 in)
EA5..1800..	1878 mm (73.9 in)	1911 mm (75.2 in)	1850 mm (72.8 in)	1800 mm (70.9 in)
EA5..2100..	2178 mm (85.7 in)	2211 mm (87.0 in)	2150 mm (84.6 in)	2100 mm (82.7 in)
EA5..2400..	2478 mm (97.6 in)	2511 mm (98.9 in)	2450 mm (96.4 in)	2400 mm (94.5 in)

8.4 Standard Bracket Dimensions

Dimensions are identical for model EZA-MBK-11N stainless steel brackets.

EZA-MBK-11

- Two end-cap replacement brackets for one emitter/receiver
- 8-ga. cold-rolled steel with black corrosion-resistant zinc chromate finish
- M5 and M6 mounting hardware

Hole center spacing: A to B = 20
Hole size: A , B = 15 × 7, C = ø 21.5

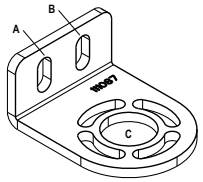

Supplied with emitters and receivers over 1050 mm.

EZA-MBK-12

- Two-piece center bracket for one emitter/receiver
- 8-ga. cold-rolled steel with black corrosion-resistant zinc chromate finish
- M5 and M6 mounting hardware

Hole center spacing: A = 20, A to B = 36
Hole size: A = ø 7, B = ø 8.3

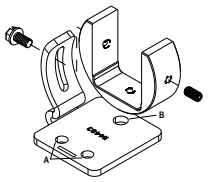

9 Accessories

9.1 Cordsets and Connections

8-Pin Threaded M12 Cordsets with Shield—Single Ended					
Model	**Length**	**Style**	**Dimensions**	**Pinout (Female)**	
MAQDC-806	2 m (6.56 ft)	Straight	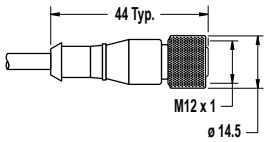	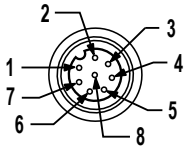	
MAQDC-815	5 m (16.4 ft)				
MAQDC-830	10 m (32.81 ft)				
MAQDC-850	15 m (49.21 ft)			1 = White 2 = Brown 3 = Green 4 = Yellow	5 = Gray 6 = Pink 7 = Blue 8 = Red

8-Pin Threaded M12 Cordsets—Double Ended					
Model (8-pin/8-pin) [6]	**Length**	**Style**	**Dimensions**	**Pinout**	
DEE2R-81D	0.3 m (1 ft)	Female Straight/ Male Straight	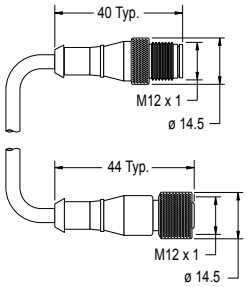	Female 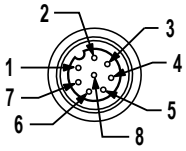 Male 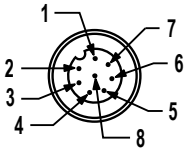	
DEE2R-83D	0.91 m (3 ft)				
DEE2R-88D	2.44 m (8 ft)				
DEE2R-815D	4.57 m (15 ft)				
DEE2R-825D	7.62 m (25 ft)				
DEE2R-850D	15.24 m (50 ft)				
DEE2R-875D	22.86 m (75 ft)				
DEE2R-8100D	30.48 m (100 ft)			1 = Brown 2 = Orange/Black 3 = Orange 4 = White	5 = Black 6 = Blue 7 = Green/ Yellow 8 = Violet

[6] Standard cordsets are yellow PVC with black overmold. For black PVC and overmold, add the suffix "**B**" to the model number (example, **DEE2R-81DB**)

IO-Link Cable Splitters			
Model	**Length**	**Description**	
CSB-M1250M1280	0 m	8-pin female to split 5-pin male and 8-pin female, M12, straight, with shield (IO-Link pin 2 is Voltage Output 1)	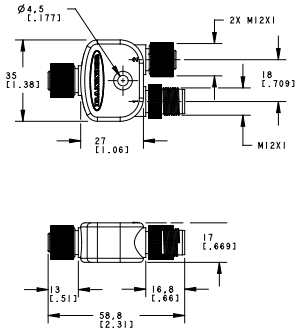
CSB-M1240M1280*	0 m	8-pin female to split 4-pin male and 8-pin female, M12, straight, with shield (IO-Link pin 2 is Discrete Output 2)	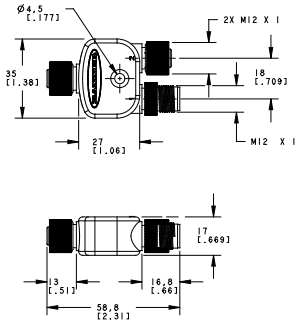

* Shipped with all EZ-ARRAY IO-Link receivers

9.2 Alignment Aids

Model	Description
LAT-1-SS	Self-contained visible-beam laser tool for aligning any EZ-ARRAY emitter/receiver pair. Includes retroreflective target material and mounting clip.
EZA-LAT-SS	Replacement adaptor (clip) hardware for EZ-ARRAY models
EZA-LAT-2	Clip-on retroreflective LAT target
BRT-THG-2-100	2-inch retroreflective tape, 100 ft
BT-1	Beam Tracker

9.3 Accessory Mounting Brackets and Stands

EZA-MBK-20

- Adapter brackets for mounting to engineered/slotted aluminum framing such as 80/20™ and Unistrut™. Angled slots allow mounting to 20 mm to 40 mm dual channel and center slot. allows mounting to single channel framing
- Retrofit for Banner MINI-SCREEN®
- Order **EZA-MBK-20U** for bracket with M5 and M6 mounting hardware

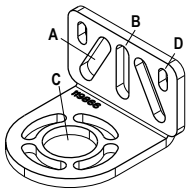

Hole size:A = ø7 × 25 (2); B = ø7 × 18; C = ø21.5; D = ø4.8 × 10.2;

See Replacement Parts on page 34 for standard brackets.
Order one EZA-MBK-20 bracket per sensor, two per pair.

Note: Standard brackets shipped with sensors connect directly to MSA series stand, using hardware included with the stands.

10 Product Support and Maintenance

10.1 Replacement Parts

Description		Model
Access cover with label - receiver		**EA5-ADR-1**
Access cover security plate (includes 2 screws, wrench)		**EZA-TP-1**
Wrench, security		**EZA-HK-1**
Standard bracket kit with hardware (includes 2 end brackets and hardware to mount to MSA Series stands)	Black	**EZA-MBK-11**
	Stainless Steel	**EZA-MBK-11N**
Center bracket kit (includes 1 bracket and hardware to mount to MSA Series stands)		**EZA-MBK-12**

10.2 Contact Us

Banner Engineering Corp. headquarters is located at:

9714 Tenth Avenue North
Minneapolis, MN 55441, USA
Phone: + 1 888 373 6767

For worldwide locations and local representatives, visit www.bannerengineering.com.

10.3 Banner Engineering Corp. Limited Warranty

Banner Engineering Corp. warrants its products to be free from defects in material and workmanship for one year following the date of shipment. Banner Engineering Corp. will repair or replace, free of charge, any product of its manufacture which, at the time it is returned to the factory, is found to have been defective during the warranty period. This warranty does not cover damage or liability for misuse, abuse, or the improper application or installation of the Banner product.

THIS LIMITED WARRANTY IS EXCLUSIVE AND IN LIEU OF ALL OTHER WARRANTIES WHETHER EXPRESS OR IMPLIED (INCLUDING, WITHOUT LIMITATION, ANY WARRANTY OF MERCHANTABILITY OR FITNESS FOR A PARTICULAR PURPOSE), AND WHETHER ARISING UNDER COURSE OF PERFORMANCE, COURSE OF DEALING OR TRADE USAGE.

This Warranty is exclusive and limited to repair or, at the discretion of Banner Engineering Corp., replacement. **IN NO EVENT SHALL BANNER ENGINEERING CORP. BE LIABLE TO BUYER OR ANY OTHER PERSON OR ENTITY FOR ANY EXTRA COSTS, EXPENSES, LOSSES, LOSS OF PROFITS, OR ANY INCIDENTAL, CONSEQUENTIAL OR SPECIAL DAMAGES RESULTING FROM ANY PRODUCT DEFECT OR FROM THE USE OR INABILITY TO USE THE PRODUCT, WHETHER ARISING IN CONTRACT OR WARRANTY, STATUTE, TORT, STRICT LIABILITY, NEGLIGENCE, OR OTHERWISE.**

Banner Engineering Corp. reserves the right to change, modify or improve the design of the product without assuming any obligations or liabilities relating to any product previously manufactured by Banner Engineering Corp. Any misuse, abuse, or improper application or installation of this product or use of the product for personal protection applications when the product is identified as not intended for such purposes will void the product warranty. Any modifications to this product without prior express approval by Banner Engineering Corp will void the product warranties. All specifications published in this document are subject to change; Banner reserves the right to modify product specifications or update documentation at any time. Specifications and product information in English supersede that which is provided in any other language. For the most recent version of any documentation, refer to: www.bannerengineering.com.

For patent information, see www.bannerengineering.com/patents.