# Features



- Chemical-resistant option available for all Banner QT50U, T30U and T30UX..C models
- Factory-installed PTFE flange and film coating bonded over the transducer provide protection from harsh environments
- The flange is sealed to the sensor face using a Viton® o-ring[1]; other o-ring materials may be specified (contact Banner Engineering)
- Performance specifications for these models are identical to those of corresponding standard models, with the exception of reduced sensing range
- Sensor dimensions and mounting vary somewhat from corresponding standard models (see dimensions)

# Models

Add the suffix **-CRFV** to the model number of any standard QT50U, T30U, or T30UX..C model sensor for the chemically resistant flange and coating.

| Model | Sensing Range | Standard Literature |
|---|---|---|
| T30UDPA-CRFV | 150 mm to 500 mm (5.9 inches to 19.6 inches) | 59200 |
| T30UINB-CRFV | 300 mm to 2 m (11.8 in to 79 in) | 57438 |
| QT50UDBQ6-CRFV | 200 mm to 8 m (8 inches to 26 feet) | 110112 |
| QT50ULB-CRFV | 200 mm to 6 m (8 inches to 19.6 feet) | 70137 |
| QT50ULBQ-CRFV | 200 mm to 6 m (8 inches to 19.6 feet) | 70137 |
| QT50UVR3F-CRFV | 200 mm to 6 m (8 inches to 19.6 feet) | 117764 |

The following models are no longer available for order but are still covered by the information in this document.

- T30UDNA-CRFV (standard literature 59200)
- T30UDNB-CRFV (standard literature 59200)
- T30UDPB-CRFV (standard literature 59200)
- T30UDPB-CRFV (standard literature 59200)
- T30UXUCQ8-CRFV (standard literature 141958)
- QT50UDB-CRFV (standard literature 110112)

# Installing the Chemical-Resistant Models

The sensor may be threaded directly into the side of a tank (see dimensions for hole diameter and thread specifications), or into a non-threaded hole, using the included threaded nut. The recommended through-hole size is 56.5 mm ± 0.5 mm for QT50U and 36.5 mm ± 0.5 mm for T30U..

For a non-threaded hole, install an o-ring onto the flange, and insert the flange completely into the hole until the sensor's front surface is against the tank's exterior surface. Place the second o-ring into the groove on the PTFE nut. Thread the nut onto the flange and tighten enough to eliminate gaps between the flange and the tank surface. This ensures that the o-rings are fully compressed.

*Installing a chemical-resistant sensor model into a non-threaded hole in a tank*

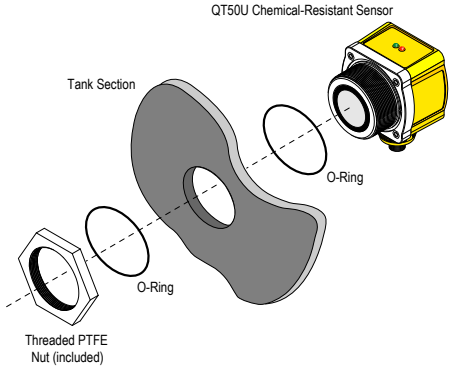


[1] Viton® is a registered trademark of Dupont Dow Elastomers

Original Instructions
22-Jul-26

© Banner Engineering Corp. All rights reserved.
www.bannerengineering.com

122155
p/n: 122155 Rev B

ПРОМЭЛЕКТРОНИКА/ sales@prom-elec.com

# Dimensions

*QT50U models*

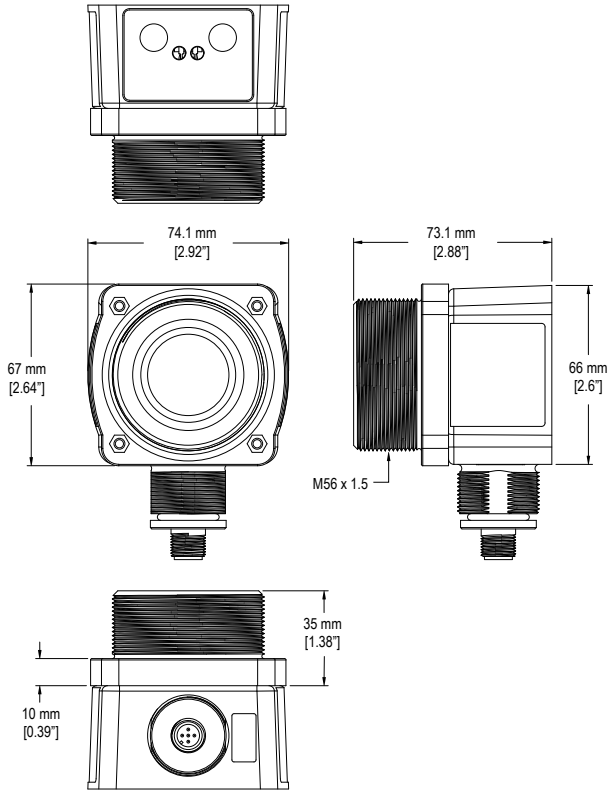


*T30U and T30UX models*

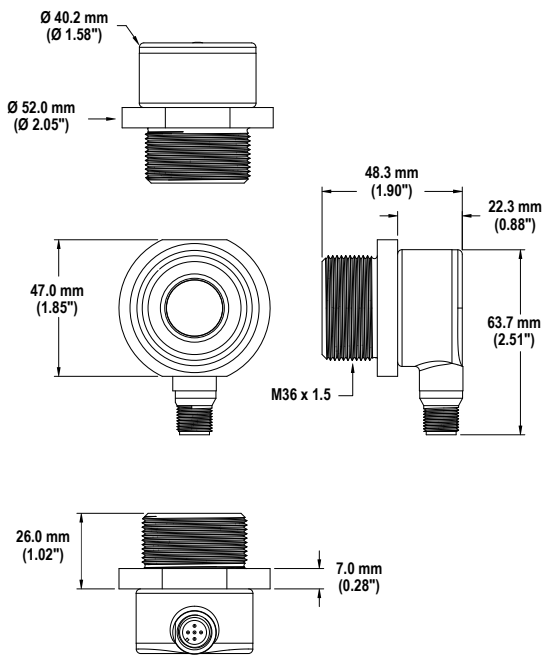


# Banner Engineering Corp Limited Warranty

Banner Engineering Corp. warrants its products to be free from defects in material and workmanship for one year following the date of shipment. Banner Engineering Corp. will repair or replace, free of charge, any product of its manufacture which, at the time it is returned to the factory, is found to have been defective during the warranty period. This warranty does not cover damage or liability for misuse, abuse, or the improper application or installation of the Banner product.

**THIS LIMITED WARRANTY IS EXCLUSIVE AND IN LIEU OF ALL OTHER WARRANTIES WHETHER EXPRESS OR IMPLIED (INCLUDING, WITHOUT LIMITATION, ANY WARRANTY OF MERCHANTABILITY OR FITNESS FOR A PARTICULAR PURPOSE), AND WHETHER ARISING UNDER COURSE OF PERFORMANCE, COURSE OF DEALING OR TRADE USAGE.**

This Warranty is exclusive and limited to repair or, at the discretion of Banner Engineering Corp., replacement. **IN NO EVENT SHALL BANNER ENGINEERING CORP. BE LIABLE TO BUYER OR ANY OTHER PERSON OR ENTITY FOR ANY EXTRA COSTS, EXPENSES, LOSSES, LOSS OF PROFITS, OR ANY INCIDENTAL, CONSEQUENTIAL OR SPECIAL DAMAGES RESULTING FROM ANY PRODUCT DEFECT OR FROM THE USE OR INABILITY TO USE THE PRODUCT, WHETHER ARISING IN CONTRACT OR WARRANTY, STATUTE, TORT, STRICT LIABILITY, NEGLIGENCE, OR OTHERWISE.**

Banner Engineering Corp. reserves the right to change, modify or improve the design of the product without assuming any obligations or liabilities relating to any product previously manufactured by Banner Engineering Corp. Any misuse, abuse, or improper application or installation of this product or use of the product for personal protection applications when the product is identified as not intended for such purposes will void the product warranty. Any modifications to this product without prior express approval by Banner Engineering Corp will void the product warranties. All specifications published in this document are subject to change; Banner reserves the right to modify product specifications or update documentation at any time. Specifications and product information in English supersede that which is provided in any other language. For the most recent version of any documentation, refer to: www.bannerengineering.com.

For patent information, see www.bannerengineering.com/patents.


© Banner Engineering Corp. All rights reserved.
www.bannerengineering.com