Features

Visible Laser Device for Aligning Light Screen Systems



- Self-contained visible-beam laser tool simplifies the alignment of any opposed-mode sensor pair, especially in applications that include long distances or corner mirrors
- Reduces the time required to align light screen systems and corner mirrors; eliminates much trial-and-error guesswork when working with infrared beams
- Uses one common 9-volt battery (included)
- Built-in circular bubble level
- One 4 × 4-inch square of high-grade retroreflective target material included for easy viewing of the laser spot at long distances
- Mounting clip (available separately or as part of a kit; see below) snaps squarely onto the housings of Banner safety light screen/grid emitters and receivers

Models

Emitter/Receiver Housing	LAT-1 with Clip(s) Kit	Clip Only	Clip-on Target
EZ-SCREEN™ 14/30 and LS	LAT-1-SS	EZA-LAT-SS	EZA-LAT-2
EZ-SCREEN™ Type 2	LAT-1-LS	LSA-LAT-2	LSA-LAT-1
EZ-SCREEN™ LP	LAT-1-LP	LPA-LAT-2	LPA-LAT-1
SGS Safety Grid System	LAT-1-SGS	SGSA-LAT-2	SGSA-LAT-1
S4B Safety Light Curtain	LAT-1-S4B	S4BA-LAT-SS	S4BA-LAT-2
All of the Above	LAT-1	-	
EZ-SCREEN™ Type 2 Heavy Duty	LAT-1-LSHD	LSHDA-LAT-2	LSA-LAT-1

Class 2 Laser Description and Safety Information



Laser light. Do not stare into the beam.

Complies with 21 CFR 1040.10 and 1040.11 except for deviations pursuant to Laser Notice No. 56, dated May 8, 2019.

CLASS 2
LASER PRODUCT

CAUTION:
- **Never stare directly into the sensor lens.**
- Laser light can damage your eyes.
- Avoid placing any mirror-like object in the beam. Never use a mirror as a retroreflective target.

CAUTION:
- **Return defective units to the manufacturer.**
- Use of controls or adjustments or performance of procedures other than those specified herein may result in hazardous radiation exposure.
- Do not attempt to disassemble this sensor for repair. A defective unit must be returned to the manufacturer.

CAUTION:
- **Ne regardez jamais directement la lentille du capteur.**
- La lumière laser peut endommager la vision.
- Évitez de placer un objet réfléchissant (de type miroir) dans la trajectoire du faisceau. N'utilisez jamais de miroir comme cible rétro-réfléchissante.

Original Instructions
05-Feb-26

© Banner Engineering Corp. All rights reserved.
www.bannerengineering.com

54599
p/n: 54599 Rev. K

ПРОМЭЛЕКТРОНИКА/ sales@prom-elec.com

CAUTION:

- **Tout dispositif défectueux doit être renvoyé au fabricant.**
- L'utilisation de commandes, de réglages ou de procédures autres que celles décrites dans le présent document peut entraîner une exposition dangereuse aux radiations.
- N'essayez pas de démonter ce capteur pour le réparer. Tout dispositif défectueux doit être renvoyé au fabricant.

Class 2 lasers are lasers that emit visible radiation in the wavelength range from 400 nm to 700 nm, where eye protection is normally afforded by aversion responses, including the blink reflex. This reaction may be expected to provide adequate protection under reasonably foreseeable conditions of operation, including the use of optical instruments for intrabeam viewing.

Complies with IEC 60825-1:2014 and EN 60825-1:2014+A11:2021.

Class 2 Laser Safety Notes. Low-power lasers are, by definition, incapable of causing eye injury within the duration of a blink (aversion response) of 0.25 seconds. They also must emit only visible wavelengths (400 nm to 700 nm). Therefore, an ocular hazard may exist only if individuals overcome their natural aversion to bright light and stare directly into the laser beam.

For safe laser use:

- Do not stare at the laser.
- Do not point the laser at a person's eye.
- Mount open laser beam paths either above or below eye level, where practical.
- Terminate the beam emitted by the laser product at the end of its useful path.

IMPORTANT: This laser device is not bore-sighted.

Class 2 Laser Characteristics

Output power: ≤ 0.625 mW
Laser wavelength: 650 nm
Pulse duration: 7 µs

Dimensions

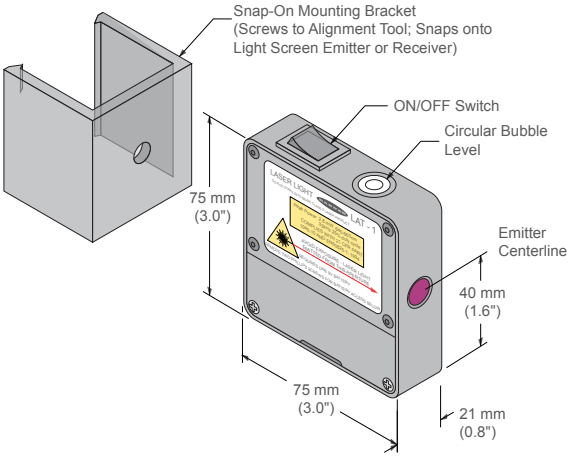

Specifications

Supply Voltage and Current

One standard 9 V battery, included (replaceable); approximately 20 hours of continuous operation

Construction

Aluminum housing; black anodized finish

Black polypropylene cover with flexible hinge for battery access

Operating Conditions

Temperature: 0° C to +40° C (+32° F to 104° F)

Maximum Relative Humidity: 90% @ +50° C (non-condensing)

Sensing Beam

Class 2 laser, 650 nm visible red IEC

Pulse Width:7 µs

Rep Rate: 30 µs

Peak Output Power: ≤ 0.625 mW

Beam Size at Aperture

Approximately 2 mm (0.08 inch) diameter

Beam Divergence

± 1.0 milliradian within specified temperature range

± 0.5 milliradians at room temperature

© Banner Engineering Corp. All rights reserved.
www.bannerengineering.com

Beam Placement

Within ± 4 milliradians (approximately ± 0.25 degrees) of parallel to front, back, top and bottom of housing

Application Notes

See Caution on page 1 regarding safe use of laser beam.

Certifications

PROC. CONT. EQ. E526767

FCC Part 15 Class B for Unintentional Radiators

(Part 15.105(b)) This equipment has been tested and found to comply with the limits for a Class B digital device, pursuant to part 15 of the FCC Rules. These limits are designed to provide reasonable protection against harmful interference in a residential installation. This equipment generates, uses, and can radiate radio frequency energy and, if not installed and used in accordance with the instructions, may cause harmful interference to radio communications. However, there is no guarantee that interference will not occur in a particular installation. If this equipment does cause harmful interference to radio or television reception, which can be determined by turning the equipment off and on, the user is encouraged to try to correct the interference by one or more of the following measures:

- Reorient or relocate the receiving antenna.
- Increase the separation between the equipment and receiver.
- Connect the equipment into an outlet on a circuit different from that to which the receiver is connected.
- Consult the dealer or an experienced radio/TV technician for help.

(Part 15.21) Any changes or modifications not expressly approved by the party responsible for compliance could void the user's authority to operate this equipment.

Industry Canada ICES-003(B)

This device complies with CAN ICES-3 (B)/NMB-3(B). Operation is subject to the following two conditions: 1) This device may not cause harmful interference; and 2) This device must accept any interference received, including interference that may cause undesired operation.

Cet appareil est conforme à la norme NMB-3(B). Le fonctionnement est soumis aux deux conditions suivantes : (1) ce dispositif ne peut pas occasionner d'interférences, et (2) il doit tolérer toute interférence, y compris celles susceptibles de provoquer un fonctionnement non souhaité du dispositif.

Alignment Procedure

To align a safety light screen using the LAT-1 follow these steps:

1. Mount all sensors and corner mirrors per the instructions in the appropriate manual. Leave the hardware slightly loose to allow for positioning adjustment.
2. Assemble the appropriate clip to the LAT-1; snap it onto the light screen emitter or receiver, and slide it to one end of the sensor. (HINT: Check the receiver for plumb first, before attaching the LAT-1 to the emitter for alignment.) Attach a retroreflective target to the corresponding end of the opposite sensor.
3. If the sensors are mounted vertically, check the circular bubble level for plumb orientation.
4. Standing behind the Alignment Tool, view the retroreflective target from behind the sensor (see Figure 1). Adjust either or both sensors and/or the corner mirrors as needed to place the laser image at the desired spot on the opposite sensor.
5. Move the Alignment Tool and the retroreflective target to the opposite ends of the sensors and repeat step 4.
6. Repeat steps 4 and 5 until the image falls at the desired spot at both the top and bottom of the opposite sensor; then tighten all mounting hardware.

Aligning a corner-mirror light screen application using the Laser Alignment Tool

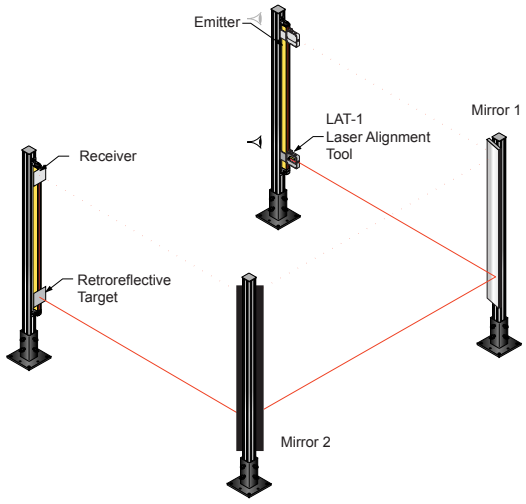

Cleaning Instructions

Clean as necessary using only a lint-free cloth or a water-dampened lint-free cloth. Do not use any other chemicals for cleaning.

Contact Us

Banner Engineering Corp. | 9714 Tenth Avenue North | Plymouth, MN 55441, USA | Phone: + 1 888 373 6767

For worldwide locations and local representatives, visit www.bannerengineering.com.

© Banner Engineering Corp. All rights reserved.
www.bannerengineering.com

Banner Engineering Corp Limited Warranty

Banner Engineering Corp. warrants its products to be free from defects in material and workmanship for one year following the date of shipment. Banner Engineering Corp. will repair or replace, free of charge, any product of its manufacture which, at the time it is returned to the factory, is found to have been defective during the warranty period. This warranty does not cover damage or liability for misuse, abuse, or the improper application or installation of the Banner product.

THIS LIMITED WARRANTY IS EXCLUSIVE AND IN LIEU OF ALL OTHER WARRANTIES WHETHER EXPRESS OR IMPLIED (INCLUDING, WITHOUT LIMITATION, ANY WARRANTY OF MERCHANTABILITY OR FITNESS FOR A PARTICULAR PURPOSE), AND WHETHER ARISING UNDER COURSE OF PERFORMANCE, COURSE OF DEALING OR TRADE USAGE.

This Warranty is exclusive and limited to repair or, at the discretion of Banner Engineering Corp., replacement. **IN NO EVENT SHALL BANNER ENGINEERING CORP. BE LIABLE TO BUYER OR ANY OTHER PERSON OR ENTITY FOR ANY EXTRA COSTS, EXPENSES, LOSSES, LOSS OF PROFITS, OR ANY INCIDENTAL, CONSEQUENTIAL OR SPECIAL DAMAGES RESULTING FROM ANY PRODUCT DEFECT OR FROM THE USE OR INABILITY TO USE THE PRODUCT, WHETHER ARISING IN CONTRACT OR WARRANTY, STATUTE, TORT, STRICT LIABILITY, NEGLIGENCE, OR OTHERWISE.**

Banner Engineering Corp. reserves the right to change, modify or improve the design of the product without assuming any obligations or liabilities relating to any product previously manufactured by Banner Engineering Corp. Any misuse, abuse, or improper application or installation of this product or use of the product for personal protection applications when the product is identified as not intended for such purposes will void the product warranty. Any modifications to this product without prior express approval by Banner Engineering Corp will void the product warranties. All specifications published in this document are subject to change; Banner reserves the right to modify product specifications or update documentation at any time. Specifications and product information in English supersede that which is provided in any other language. For the most recent version of any documentation, refer to: www.bannerengineering.com.

For patent information, see www.bannerengineering.com/patents.

© Banner Engineering Corp. All rights reserved.
www.bannerengineering.com