MODEL NO.	"L"	"TL"	P/N
PBE415UTMSSMCT	5000 [197]	4572 [180]	65914
PBE43UTMSSMTL12	1000 [39]	305 [12]	93249

*PLASTIC (TEFLON, NYLON, ETC.) SET SCREW TO BE USED FOR MOUNTING TO ENSURE SEALING INTEGRITY.

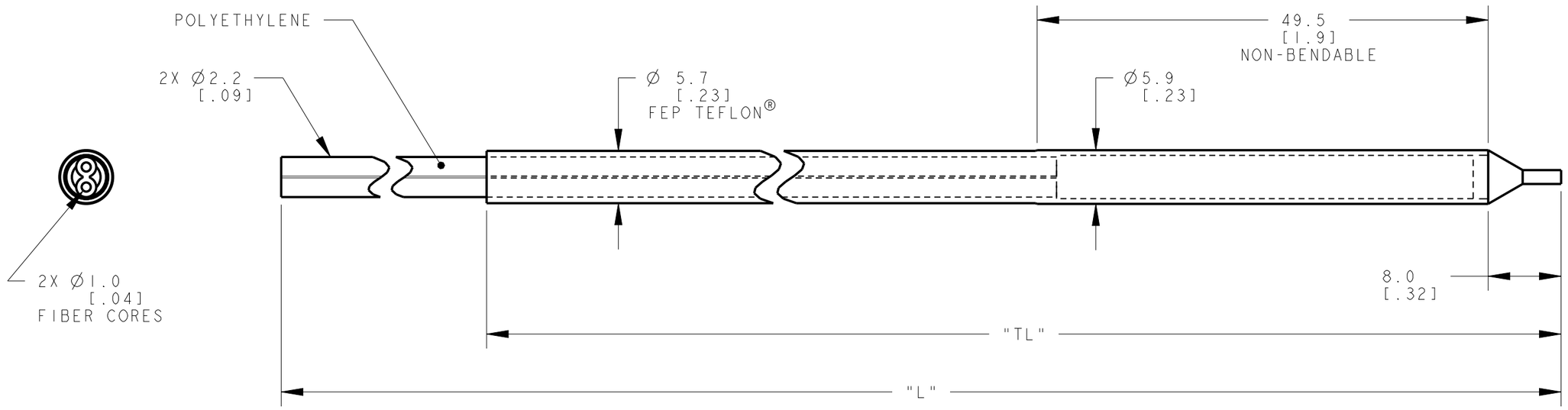

NOTES:
1. ALL DIMENSIONS ARE MILLIMETERS [INCHES] UNLESS OTHERWISE NOTED.
2. REFER TO "www.bannerengineering.com" FOR ADDITIONAL DATA AND SPECIFICATIONS.

This drawing is the property of BANNER ENGINEERING CORP. Any use or reproduction, in any form, without prior written permission of Banner is prohibited.
© 2015 Banner Engineering Corp.

THIRD ANGLE PROJECTION

BANNER ENGINEERING CORP.
www.bannerengineering.com

TITLE

PBE4 TEFLON ENCAPSULATED SS FERRULE UNTERMINATED

SIZE	DRAWING NO.	REV.
B	193989	A
SCALE 2:1	SHEET 1 OF 1	

CREO

ПРОМЭЛЕКТРОНИКА/ sales@prom-elec.com