Q45VA Sensor Mounting Options Quick Start Guide

Before You Begin

Read these instructions before using your Sure Cross® radios. Do not discard these instructions.

For more detailed information about installing and using your Sure Cross products, download and read the Sure Cross Wireless I/O Network Manual (p/n 132607).

Always mount Q45VA / VAC so that the x-axis (reference label on side of sensor) is parallel to the main centerline of the asset. The front of the Q45VA / VAC can face either direction as long as x-axis is parallel. Verify the z-axis is perpendicular (reference label on side of sensor) with the radius of the of the asset main shaft.

Figure 1. Mounting orientation

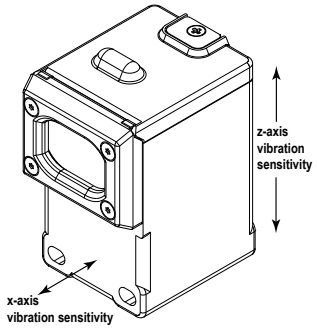

Figure 2. Side view of monitored asset

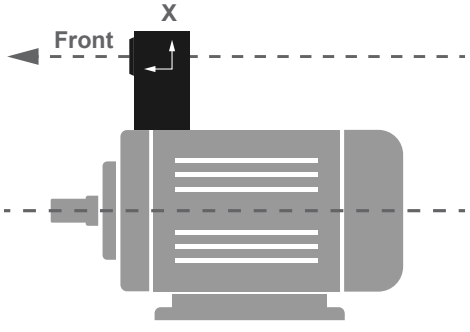

Figure 3. Front view of monitored asset

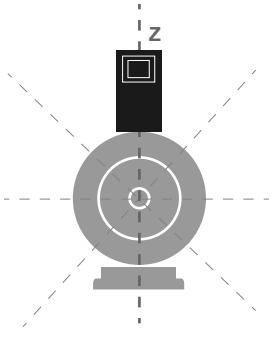

There are four recommended ways to mount the Q45VA / VAC to the monitored asset:

- Install the Q45VA Sensor Node Directly to the Asset on page 1
- Install the Q45VA Sensor Node Using Bracket Assembly BWA-Q45VA-FESS on page 1
- Install the Q45VA Sensor Node Using Magnetic Mount Bracket BWA-Q45VA-CMSS on page 3
- Install the Q45 Using the Disc from BWA-Q45VA-FESS and Magnetic Mount Bracket BWA-Q45VA-CMSS on page 5

Install the Q45VA Sensor Node Directly to the Asset

Follow these instructions to mount the Q45VA Sensor Node directly to the asset you are monitoring. It is important to note that using this method to mount the sensor may not allow future replacement without damaging the sensor.

1. Clean the bottom surface of the Q45VA Sensor Node.
2. Apply Loctite 330 and 7387 Activator (or similar adhesive) to the base of the Q45 housing.

Figure 4. Apply adhesive to the bottom of the Q45

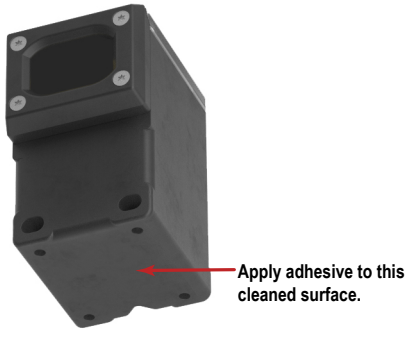

3. Place the Q45VA on the asset, ensuring the correct alignment as shown in Before You Begin on page 1.
4. After the Q45VA Sensor Node is aligned, hold for several minutes until the epoxy hardens.

Install the Q45VA Sensor Node Using Bracket Assembly BWA-Q45VA-FESS

Follow these instructions to mount the Q45VA Sensor Node to the monitored asset using the **BWA-Q45VA-FESS** bracket assembly.

The **BWA-Q45VA-FESS** bracket assembly includes:

- Screw retainers (2)
- Base plate (1)

Original Document
208986 Rev. E

29 March 2022

208986

ПРОМЭЛЕКТРОНИКА/ sales@prom-elec.com

- Phillip head screws (4)
- Set screw (1)
- Disc (1)

*Figure 5. **BWA-Q45VA-FESS** bracket and Q45VA assembly exploded view*

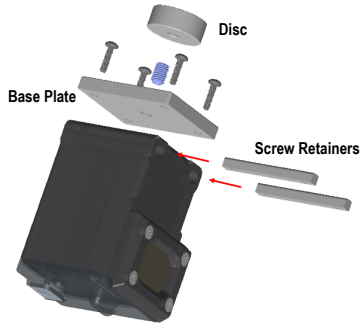

Figure 6. Final assembly



1. Flip the Q45VA / VAC upside down.
2. Insert the screw retainers into the two slots of the device and align the screw holes with the holes at the bottom of the Q45VA / VAC.

Figure 7. Insert the screw retainers

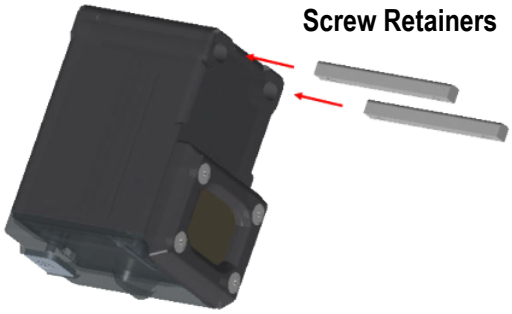

3. Position the base plate on the bottom of the Q45VA / VAC so that the four counterbores face up and the alignment mark faces the front of the Q45VA / VAC. Align the counterbores with the holes at the bottom of the device. See Figure 5 on page 2.
4. Securely attach the base plate using the four Phillips head screws.
5. Apply Loctite to the center screw hole of the base plate. Secure the set screw into the center hole until it reaches resistance.

Figure 8. Secure the set screw

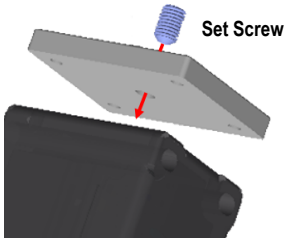

6. Fasten the disc on the set screw, with the threaded side facing away from the Q45VA / VAC. Tighten only with your fingers.

Figure 9. Fasten the disc onto the set screw and finger tighten

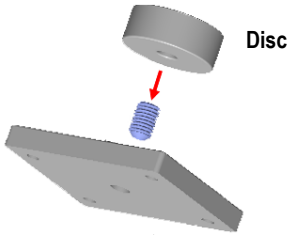

7. Using a felt marker, place a mark on the disc that aligns with the machined groove on the base plate.

   This marks the proper alignment of the Q45VA Sensor Node on your asset and aids in proper alignment if the Q45VA Sensor Node needs to be replaced in the future. See Figure 10 on page 3.

Figure 10. Place a mark on the disc

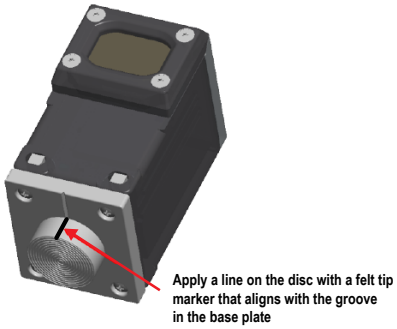

8. Thoroughly clean the surface on the asset when the sensor is going to be mounted.
9. Apply Loctite 330 and 7387 Activator (or similar adhesive) per instructions to the exposed clean surface of the disc and place the sensor into position, ensuring the correct alignment is shown in Before You Begin on page 1. See Figure 11 on page 3.

Figure 11. Apply adhesive to the disc

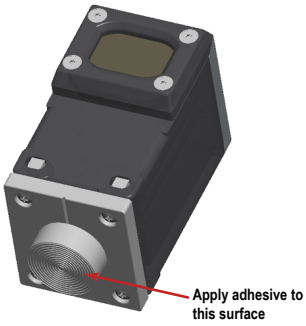

10. Hold the Sensor Node in place for several minutes until the epoxy has hardened.
11. After the epoxy has hardened, remove the sensor from the disc.
12. Apply 262 Series Loctite to the set screw and screw the Sensor Node back onto the disc, ensuring that the groove in the base plate and the mark align.

Figure 12. Q45VA mounted on a motor

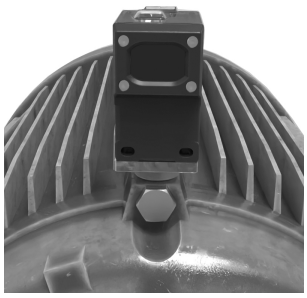

Install the Q45VA Sensor Node Using Magnetic Mount Bracket BWA-Q45VA-CMSS

Follow these instructions to mount the Q45VA Sensor Node to the monitored asset using the **BWA-Q45VA-CMSS** bracket. Mounting the Q45VA Sensor Node using this magnetic mount bracket is the easiest and most flexible mounting solution.

The **BWA-Q45VA-CMSS** bracket assembly includes:

- Screw retainers (2)
- Magnetic base plate (1)
- Phillip head screws (4)

*Figure 13. Exploded view of the **BWA-Q45VA-CMSS** Magnetic Mount Bracket*

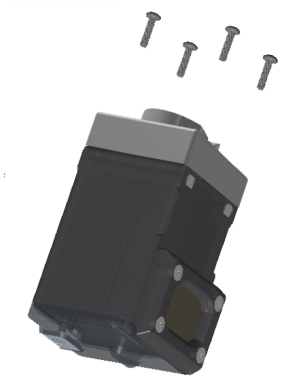

1. Turn the Q45VA Wireless Sensor Node upside down.
2. Insert the screw retainers into the two slots of the device and align the screw holes with the holes at the bottom of the Q45VA.

Figure 14. Insert the screw retainers

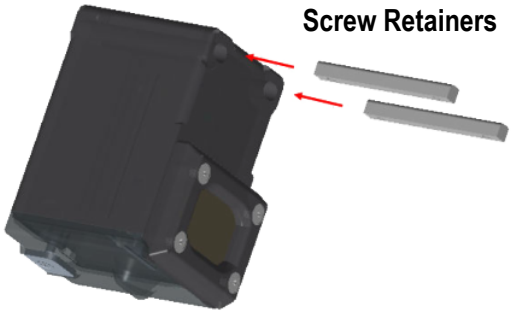

3. Position the base plate on the bottom of the Q45VA so that the four counterbore holes face up with v-groove of the magnet facing the front of the Q45VA. Align the counterbored holes with the holes at the bottom of the Q45VA.

*Figure 15. Final assembly of the **BWA-Q45VA-CMSS** Magnetic Mount Bracket and the Q45*



4. Securely attach the base plate using the four Phillips head screws. Do not overtighten.
5. Verify the sensor is correctly alignment as shown in Before You Begin on page 1.

Figure 16. Q45VA mounted on a motor

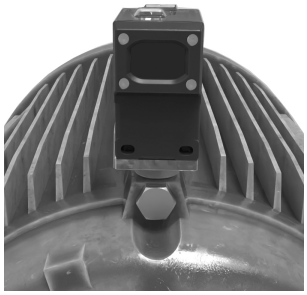

Install the Q45 Using the Disc from BWA-Q45VA-FESS and Magnetic Mount Bracket BWA-Q45VA-CMSS

Mounting the Q45VA / VAC using these combined parts offers another mounting solution, especially if you are mounting to aluminum or any other non-magnetic surfaces.

Follow these instructions to mount the Q45VA / VAC to the monitored asset using the disc from the **BWA-Q45VA-FESS** bracket kit and the **BWA-Q45VA-CMSS** bracket.

1. Follow the instructions to mount the Q45VA / VAC to the BSW-BK-010 as shown in Install the Q45VA Sensor Node Using Magnetic Mount Bracket BWA-Q45VA-CMSS on page 3.
2. Thoroughly clean the surface on the asset where the sensor is going to be mounted.
3. Apply Loctite 330 and 7387 Activator (or similar adhesive), according to its instructions, to the exposed clean grooved surface of the disc.

Figure 17. Apply the adhesive to the grooved surface of the disc

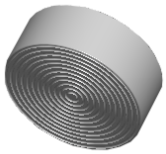

4. Place the disc on the asset and press until the disc is securely attached.
5. Mount the Q45VA / VAC with the **BWA-Q45VA-CMSS** magnetic bracket already installed directly on the disc for a secure, magnetic, mobile mounting solution.

Figure 18. Mount the -CMSS bracket to the disc

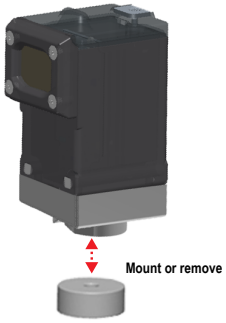

© Banner Engineering Corp. All rights reserved