UM-FA-xA Universal Input Safety Module

Features

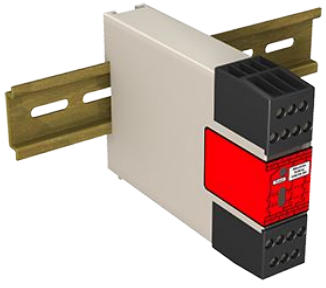

- Monitors a wide variety of safety and non-safety input devices:
  - Optical-based safeguarding devices, such as Safety Laser Scanners
  - Positive-opening safety switches used for guard interlocking
  - Emergency-stop devices, such as palm buttons and rope/cable pulls
  - Standard sensors for non-safety applications, such as photoelectric monitoring position or end-of-travel.
- The safety inputs can monitor:
  - +24 V DC solid-state (PNP) outputs in single-channel or dual-channel hookup
  - +24 V DC source that is switched by hard/relay contacts in single-channel or dual-channel hookup
  - Hard/relay contacts in a dual-channel hookup using terminals S11-S12 and S21-S22
- UM-FA-9A: Three normally open (NO) output switching channels for connection to control-reliable power interrupt circuits
- UM-FA-11A: Two normally open (NO) and one normally closed (NC) output switching channels for connection to control-reliable power interrupt circuits
- Automatic reset or monitored manual reset, depending on hookup
- Design complies with standards ANSI B11.19 Control Reliability, ISO 13850 (EN418), and ISO 13849-1 (EN954-1) Category 4
- Safety Integrity Level SIL 3 per IEC 61508/IEC 62061
- Category 4 Performance level PL e per ISO 13849-1
- For use in functional stop category 0 applications per NFPA 79 and IEC/EN 60204-1
- Plug-in terminal blocks
- 24 V AC/DC operation

WARNING:
- **Not a stand-alone safeguarding device**
- Failure to properly safeguard hazards according to a risk assessment, local regulations, and applicable standards might lead to serious injury or death.
- This Banner Engineering Corp. device is considered complementary equipment that is used to augment safeguarding that limits or eliminates an individual's exposure to a hazard without action by the individual or others.

Models

Models	Output Switching Channels	Safety Output Contact Rating
UM-FA-9A	3 normally open (NO)	6 A
UM-FA-11A	2 normally open (NO), and 1 normally closed (NC)	7 A

Important... Read This Before Proceeding

The user is responsible for satisfying all local, state, and national laws, rules, codes, and regulations relating to the use of this product and its application. Banner Engineering Corp. has made every effort to provide complete application, installation, operation, and maintenance instructions. Please contact a Banner Applications Engineer with any questions regarding this product.

The user is responsible for making sure that all machine operators, maintenance personnel, electricians, and supervisors are thoroughly familiar with and understand all instructions regarding the installation, maintenance, and use of this product, and with the machinery it controls. The user and any personnel involved with the installation and use of this product must be thoroughly familiar with all applicable standards, some of which are listed within the specifications. Banner Engineering Corp. makes no claim regarding a specific recommendation of any organization, the accuracy or effectiveness of any information provided, or the appropriateness of the provided information for a specific application.

Overview

The UM-FA-xA Universal Safety Module (or "Safety Module" or "Module" in this document) is used to increase the safety circuit integrity (for example, Control Reliability) of a circuit. As shown in the wiring configurations in "Safety Input Device Wiring Options" on page 4, the Safety Module is designed to monitor a 1-channel or 2-channel safety switch(es); for example, an E-stop or safety interlock switch, or a 1-channel or 2-channel PNP output from devices such as a sensor or a safety laser scanner.

Safety Circuit Integrity and ISO 13849-1 Safety Circuit Principles

Safety circuits involve the safety-related functions of a machine that minimize the level of risk of harm. These safety-related functions can prevent initiation, or they can stop or remove a hazard. The failure of a safety-related function or its associated safety circuit usually results in an increased risk of harm.

The integrity of a safety circuit depends on several factors, including fault tolerance, risk reduction, reliable and well-tried components, well-tried safety principles, and other design considerations.

Depending on the level of risk associated with the machine or its operation, an appropriate level of safety circuit integrity (performance) must be incorporated into its design. Standards that detail safety performance levels include ANSI B11.19 Performance Criteria for Safeguarding and ISO 13849-1 Safety-Related Parts of a Control System.

Safety Circuit Integrity Levels

Safety circuits in International and European standards have been segmented into Categories and Performance Levels, depending on their ability to maintain their integrity in the event of a failure and the statistical likelihood of that failure. ISO 13849-1 details safety circuit integrity by describing circuit architecture/structure (Categories) and the required performance level (PL) of safety functions under foreseeable conditions.

In the United States, the typical level of safety circuit integrity has been called "Control Reliability". Control Reliability typically incorporates redundant control and self-checking circuitry and has been loosely equated to ISO 13849-1 Category 3 or 4 and/or Performance Level “d” or “e” (see ANSI B11.19).

Perform a risk assessment to ensure appropriate application, interfacing/hookup, and risk reduction (see ANSI B11.0 or ISO 12100). The risk assessment must be performed to determine the appropriate safety circuit integrity in order to ensure that the expected risk reduction is achieved. This risk assessment must take into account all local regulations and relevant standards, such as U.S. Control Reliability or European "C" level standards.

Original Instructions
04-Nov-25

© Banner Engineering Corp. All rights reserved.
www.bannerengineering.com

141249
p/n: 141249 Rev. I

ПРОМЭЛЕКТРОНИКА/ sales@prom-elec.com

Fault Exclusion

An important concept within the requirements of ISO 13849-1 is the probability of the occurrence of a failure, which can be reduced using a technique termed "fault exclusion." The rationale assumes that the possibility of certain well-defined failure(s) can be reduced via design, installation, or technical improbability to a point where the resulting fault(s) can be, for the most part, disregarded—that is, "excluded" in the evaluation.

Fault exclusion is a tool a designer can use during the development of the safety-related part of the control system and the risk assessment process. Fault exclusion allows the designer to design out the possibility of various failures and justify it through the risk assessment process to meet the requirements of ISO 13849-1/-2.

Requirements vary widely for the level of safety circuit integrity in safety applications (that is, Control Reliability or Category/Performance Level) per ISO 13849-1. Although Banner Engineering Corp. always recommends the highest level of safety in any application, the user is responsible to safely install, operate, and maintain each safety system and comply with all relevant laws and regulations.

WARNING:
- **Determine the safety category**
- The design and installation of the safety devices and the means of interfacing of those devices could greatly affect the level of safety circuit integrity.
- Perform a risk assessment to determine the appropriate safety circuit integrity level or safety category, as described by ISO 13849-1, to ensure that the expected risk reduction is achieved and that all applicable regulations and standards are met.

Monitoring of Safety Devices

Requirements vary widely for the level of safety circuit integrity in safety applications (that is, Control Reliability or Category/Performance Level) per ISO 13849-1. While Banner Engineering always recommends the highest level of safety in any application, it is the responsibility of the user to safely install, operate and maintain each safety system and comply with all relevant laws and regulations.

Although only a few applications are listed (see "Input Device Requirements" on page 3), the Module can monitor a variety of devices as long as the input requirements are complied with (see Electrical Installation and Specifications). The Safety Module does not have 500 ms simultaneity between inputs and thus **cannot be used for monitoring a two-hand control**. In all cases, the safety performance (integrity) must reduce the risk from identified hazards as determined by the machine's risk assessment.

WARNING:
- **Ensure the safety circuit integrity**
- The safety circuit integrity level is affected by the design and installation of the safety devices and the means of interfacing with those devices.
- Perform a risk assessment to determine the appropriate safety circuit integrity level or category to ensure the expected risk reduction is achieved and all applicable regulations and standards are in compliance (see ANSI B11.0 and ANSI B11.19, ISO 12100 and ISO13849-1 or the applicable standards).

Indicators and Adjustments

The Safety Module has indicators for input power and output relay contact status (K1 and K2). There are no adjustments and no user-serviceable parts.

Features

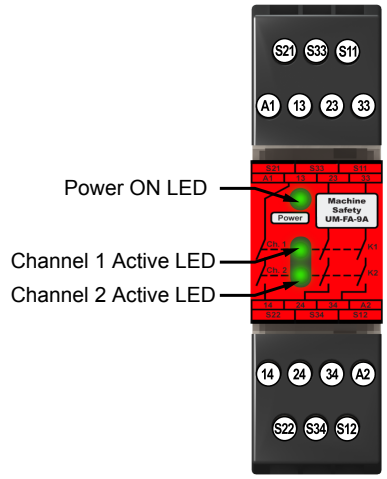

Accessing the DIP switches

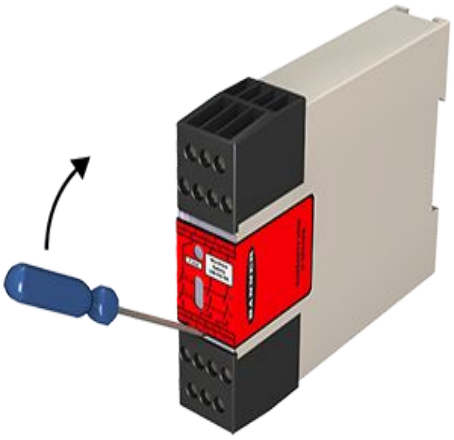

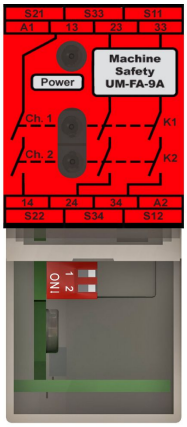

The Safety Module can monitor dry (hard/relay) contacts as well as solid-state PNP outputs from sensors or light screens, either in single-channel or dual-channel mode. To select dry contact inputs and single-channel solid-state inputs, set the two DIP switches under the lower terminal block to ON (both switches toward the circuit board). To select dual-channel solid-state inputs, set the two DIP switches to OFF (away from the circuit board). The factory default setting is for dual-channel solid-state input mode (both switches OFF/away from the circuit board), see "Figure: Dual-Channel Wiring Configuration for Solid State Devices (+24 V DC Supply Only)" on page 5.

DIP switch settings for dual- and single-channel (switch 1 and 2 are ON)

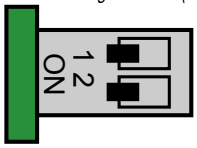

DIP switch settings for solid-state dual-channel (default) (switch 1 and 2 are OFF)

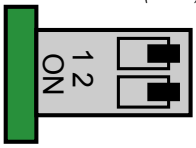

© Banner Engineering Corp. All rights reserved. www.bannerengineering.com

Input Device Requirements

CAUTION:
- **Incomplete installation information**
- Many installation considerations necessary to properly apply these devices are not covered by this document.
- Refer to the appropriate device installation instructions to ensure the safe application of the device.

Optical Sensors

The safety inputs may be used to monitor optical-based devices that use light as a means of detection. These devices include safety light screens (curtains), safety laser scanners, and multiple/single beam devices (grids/points).

The design and installation of the optical safeguarding device should comply with ANSI B11.19, IEC61496 (all applicable parts), ISO 13855, and/or other applicable standards. Optical safety devices must be placed at an appropriate safety distance (separation distance) from the safeguarded hazard. Because these devices vary, it is not practical to list specific calculations here. Refer to the applicable standards and to manufacturer documentation specific to your device for the appropriate calculations and for complete installation information (such as AG4 installation manual p/n 144924).

Interlocked Guards (Gates)

The safety inputs can be interfaced with positive-opening safety switches to monitor the position of an interlock guard or gate. Each switch must provide electrically isolated contacts: at minimum, one normally closed (N.C.) contact from each individually mounted switch. The contacts must be of "positive-opening" (direct-opening) design, as described by IEC60947- 5-1, with one or more normally closed contacts rated for safety. In addition, the switches must be mounted in a "positive mode," to move/disengage the actuator from its home position and open the normally closed contact when the guard opens.

The design and installation of the interlocked guard and the safety switches should comply with ANSI B11.19, ISO14119, ISO 14120, and/or other applicable standards. See the device manufacturer installation instructions for complete information.

In higher levels of safety performance, the design of a dual-channel coded magnetic switch typically uses complementary switching, in which one channel is open and one channel is closed at all times. The inputs of the Safety Module **do not support complementary switching**, and thus should not be used with coded magnetic safety switches.

Emergency Stop Push Buttons and Rope/Cable Pull Switches

The safety inputs can be interfaced with positive-opening switches to monitor an emergency-stop (E-stop) push button or rope/cable pull. The switch must provide one or two contacts for safety which are closed when the switch is armed. Once activated, the E-stop switch must open all its safety-rated contacts, and must require a deliberate action (such as twisting, pulling, or unlocking) to return to the closed-contact, armed position. The switch must be a "positive-opening" (or direct-opening) type, as described by IEC 60947-5-1.

Standards NFPA 79, ANSI B11.19, IEC/EN 60204-1, and ISO 13850 specify additional emergency stop switch device requirements, including the following:
- Emergency-stop push buttons shall be located at each operator control station and at other operating stations where emergency shutdown is required.
- Stop and emergency-stop push buttons shall be continuously operable and readily accessible from all control and operating stations where located. Do not mute or bypass E-stop buttons or rope/cable pulls.
- Actuators of emergency-stop devices shall be colored red. The background immediately around the device actuator shall be colored yellow (where possible). The actuator of a push-button-operated device shall be of the palm or mushroom-head type.
- The emergency-stop actuator shall be a self-latching type.

In addition, for Rope/Cable Pull Installations Only:
- The wire rope should be easily visible and readily accessible along its entire length. Red markers or flags may be fixed on the rope to increase its visibility.
- The rope or cable pull must provide constant tension and must have the capability to react to a force in any direction.
- Mounting points, including support points, must be rigid.
- The rope should be free of friction at all supports. Pulleys are recommended.
- The switch must have a self-latching function that requires a manual reset after actuation

Some applications may have additional requirements; comply with all relevant regulations. See the device manufacturer's installation instructions for complete information.

WARNING:
- **Do not mute or bypass any emergency stop device**
- Muting or bypassing the safety outputs renders the emergency stop function ineffective.
- ANSI B11.19, NFPA 79 and IEC/EN 60204-1 require that the emergency stop function remains active at all times.

Mechanical Installation

The UM-FA-xA Universal Module must be installed inside an enclosure.
It is not designed for exposed wiring. It is the user's responsibility to house the UM-FA-xA Universal Module in an enclosure with NEMA 3 (IEC IP54) rating, or better. The UM-FA-xA Universal Module mounts directly to standard 35 mm DIN rail.

Heat Dissipation Considerations: For reliable operation, ensure that the operating specifications are not exceeded. The enclosure must provide adequate heat dissipation so that the air closely surrounding the UM-FA-xA Universal Module does not exceed the maximum operating temperature stated in the Specifications. Methods to reduce heat build-up include venting, forced airflow (for example, exhaust fans), adequate enclosure exterior surface area, and spacing between modules and other heat sources.

Electrical Installation

WARNING:
- **Risk of electric shock**
- Use extreme caution to avoid electrical shock. Serious injury or death could result.
- Always disconnect power from the safety system (for example, device, module, interfacing, etc.), guarded machine, and/or the machine being controlled before making any connections or replacing any component. Lockout/tagout procedures might be required. Refer to OSHA 29CFR1910.147, ANSI Z244-1, or the applicable standard for controlling hazardous energy.
- Make no more connections to the device or system than are described in this manual. Electrical installation and wiring must be made by a Qualified Person[1] and must comply with the applicable electrical standards and wiring codes, such as the NEC (National Electrical Code), NFPA 79, or IEC 60204-1, and all applicable local standards and codes.

Electrical installation must be made by qualified personnel[2] and must comply with NEC (National Electrical Code), NFPA 79 or IEC/EN 60204-1, and all applicable local standards. It is not possible to give exact wiring instructions for a device that interfaces to a multitude of machine control configurations. The following guidelines are general in nature. Perform a risk assessment to ensure appropriate application, interfacing/connection, and risk reduction (see ANSI B11.0 or ISO 12100).

---

[1] A person who, by possession of a recognized degree or certificate of professional training, or who, by extensive knowledge, training and experience, has successfully demonstrated the ability to solve problems relating to the subject matter and work.
[2] A Qualified Person possesses a recognized degree or certificate or has extensive knowledge, training, and experience to solve problems relating to the emergency stop installation.

© Banner Engineering Corp. All rights reserved. www.bannerengineering.com

The Safety Module has no delay function. Its output relay contacts open within **25 milliseconds** after a safety input opens. This classifies the Safety Module as a functional stop "Category 0" control, as defined by NFPA 79 and IEC/EN 60204-1.

The safety inputs can be connected to:

- +24 V DC solid-state (PNP) outputs in single-channel or dual-channel connection configuration
- +24 V DC source that is switched by hard/relay contacts in single-channel or dual-channel connection configuration
- Hard/relay contacts in a dual-channel connection configuration using terminals S11-S12 and S21-S22

The UM Safety Module must be configured (via DIP switch) for the appropriate connection to operate properly. When using devices with redundant solid-state safety outputs (such as the AG4 Safety Laser Scanner OSSDs) or redundant hard contacts switching a +24 V DC source, both the DIP switches must be set to the "OFF" position (default position, see "Indicators and Adjustments" on page 2). This setting is for solid-state dual-channel connections using terminals S11-S12 and S21-S22 as described in "Figure: Dual-Channel Wiring Configuration for Solid State Devices (+24 V DC Supply Only)" on page 5.

To configure the Module for dual-channel hookup to monitor a device with redundant hard contacts (such as an emergency-stop button), set both the DIP switches to the "ON" position. This setting is for dual-channel connections using terminals S11-S12 and S21-S22 as described in "Figure: Dual-Channel Wiring Configuration for Devices with Hard Contacts" on page 5, or when the dual-channel input is not used (is jumpered) in the single-channel connection configuration as described in "Figure: Single-Channel Wiring Configuration for Devices with Hard Contacts" on page 5 and "Figure: Single-Channel Wiring Configuration for Solid State Devices" on page 6.

Safety Input Device Wiring Options

The operation of all dual-channel wiring options is concurrent, meaning that input channel 1 and input channel 2 must be in the same state in both the STOP and RUN condition, but with no simultaneity (timing) requirement between the channels.

The dry (hard/relay) contact **dual-channel wiring configuration** is able to detect certain failures and faults, such as short circuits, that could result in a loss of the safety function. Once such a failure or fault is detected, the Safety Module will turn OFF (open) its safety outputs until the problem is fixed. This circuit can meet ISO 13849-1 Category 2, 3, or 4 requirements, depending on the safety rating and the installation of the safety input device. This circuit can detect a short circuit between channels or to another source of power, at a minimum, when the device is actuated.

The **solid-state dual-channel wiring configuration** cannot detect short circuits between input channels or to secondary sources of +24 V DC. To achieve higher levels of safety performance, the safety device that is connected to input channels 1 and 2 must be capable of detecting these short circuits and properly responding by turning both channels OFF. This circuit can meet ISO 13849-1 Category 2, 3, or 4 requirements depending on the safety rating, installation, and the fault detection (for example, short circuit) capabilities of the safety input device. If short circuit detection is not provided, the circuit can meet only Category 3.

A single device with redundant outputs that can fail in such a manner to lose the safety function, such as a single safety interlocking switch, can typically meet only a Category 2. See below for means to eliminate or minimize the possibility of failures and faults that could result in the loss of the safety function(s).

The **single-channel wiring configuration** cannot detect short circuits to secondary sources of +24 V DC or detect the loss of the switching function of the safety input device (that is, it is not redundant) and thus this circuit typically can meet only ISO 13849-1 Category 2.

It is recommended that in all circumstances the installation of the Safety Module and its associated safety input devices are installed to eliminate or minimize the possibility of failures and faults that could result in the loss of the safety function(s). Methods to eliminate or minimize the possibility of these failures include, but are not limited to:

- Physically separating interconnecting control wires from each other and from secondary sources of power.
- Routing interconnecting control wires in separate conduit, runs, or channels.
- Locating all elements (modules, switches, and devices under control) within one control panel, adjacent to each other, and directly connected with short wires.
- Properly installing multi-conductor cabling and multiple wires through strain-relief fittings. (Over-tightening of a strain-relief can cause short circuits at that point.)
- Using positive-opening components as described by IEC 60947-5-1 that are installed and mounted in a positive mode.
- Periodically checking the functional integrity/safety function and training operators, maintenance personnel, and others associated with the operation of the machine to recognize and immediately correct such failures.

If you have any questions about your intended use, please contact a Banner applications engineer.



WARNING:
- **Properly install arc or transient suppressors**
- Failure to follow these instructions could result in serious injury or death.
- Install any suppressors as shown across the coils of the machine primary control elements. Do not install suppressors directly across the output contacts of the safety or interface module. In such a configuration, it is possible for suppressors to fail as a short circuit.



WARNING:
- **Interfacing master stop controls**
- Failure to follow these instructions could result in serious injury or death.
- Unless the same degree of safety is maintained, never wire an intermediate device(s) (PLC, PES, PC) between the safety module outputs and the master stop control element it switches such that a failure causes a loss of the safety stop command or the failure allows the safety function to be suspended, overridden, or defeated.
- When forced-guided, mechanically linked relays are added as intermediate switching devices, a normally closed (N.C.) forced-guided monitor contact from each relay must be added to the series feedback loop or properly wired external device monitoring channel.



WARNING:
- **Connect two or more devices to the same safety module (controller) in series**
- Connecting devices in parallel defeats the switch contact monitoring ability of the module and creates an unsafe condition that could result in serious injury or death.
- Failure to test each device individually in this manner could result in undetected faults and create an unsafe condition that could result in serious injury or death.
- Connect the contacts of the corresponding pole of each switch in series. Never connect the contacts of multiple switches in parallel. Individually actuate (engage) each device, then release (or re-arm) and reset the safety module. This allows the module to check each switch and its wiring to detect faults. Perform this check during the prescribed checkouts.

© Banner Engineering Corp. All rights reserved. www.bannerengineering.com

Dual-Channel Wiring Configuration for Devices with Hard Contacts

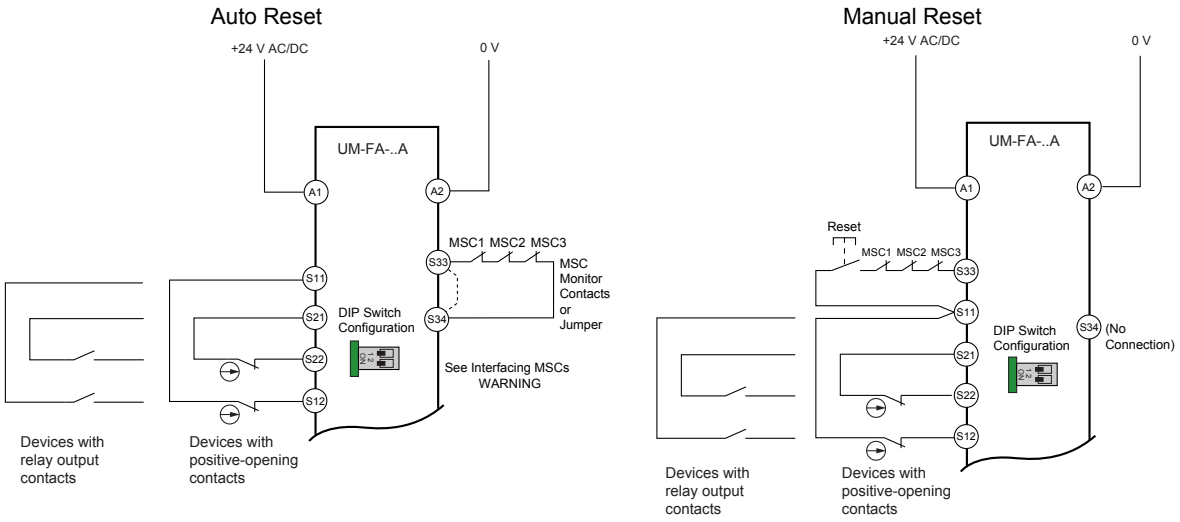

Dual-Channel Wiring Configuration for Solid State Devices (+24 V DC Supply Only)

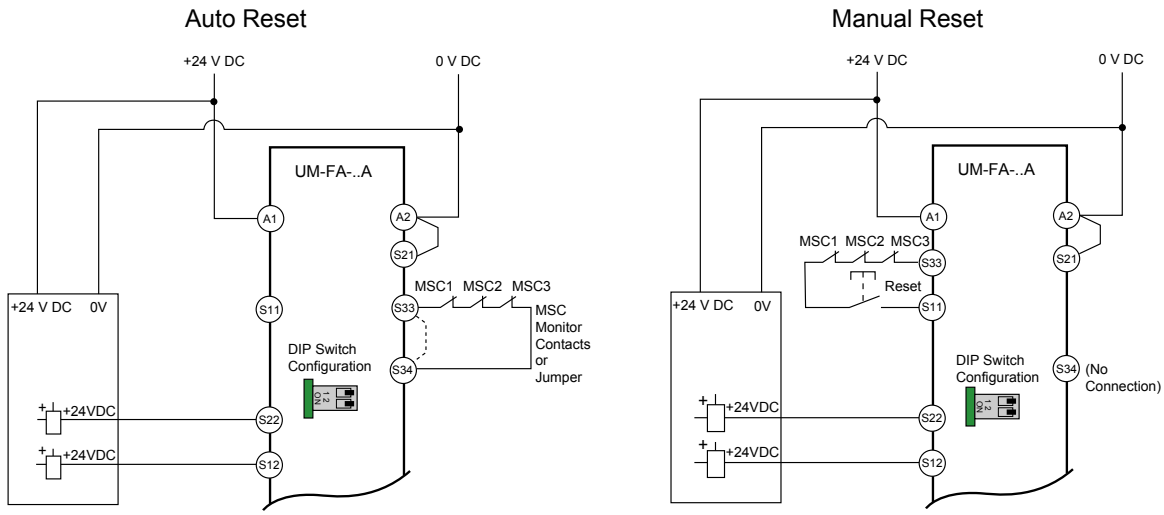

Single-Channel Wiring Configuration for Devices with Hard Contacts

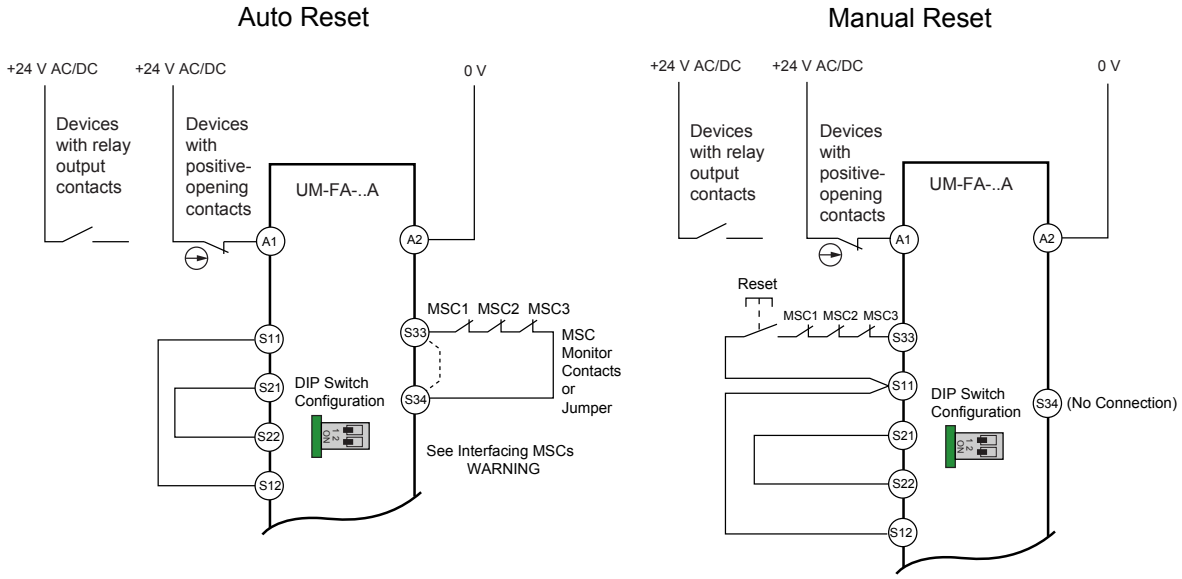

© Banner Engineering Corp. All rights reserved. www.bannerengineering.com

Single-Channel Wiring Configuration for Solid State Devices

Auto Reset

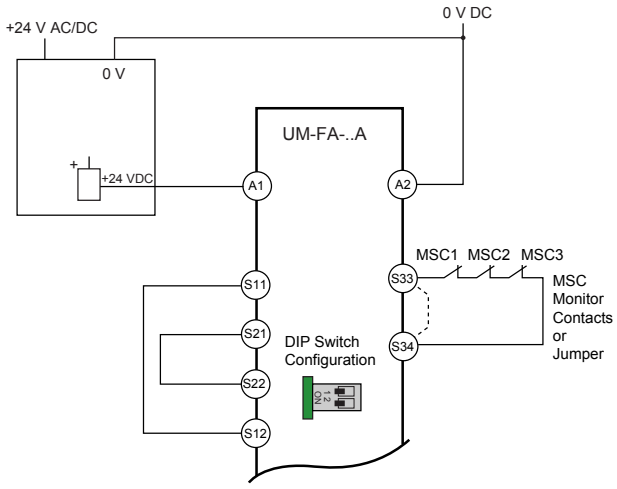

Manual Reset

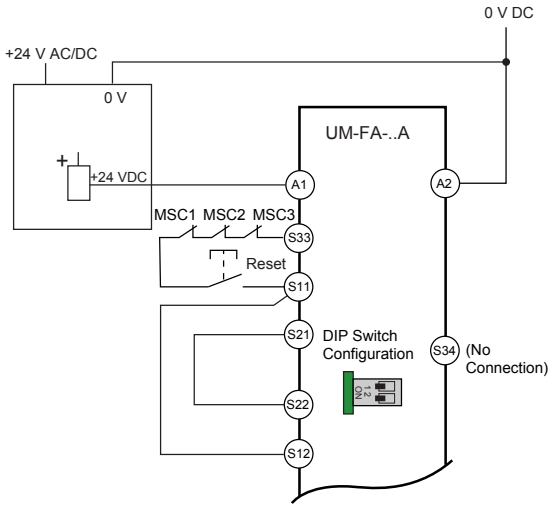

Machine Control Circuit Connections

Model UM-FA-9A

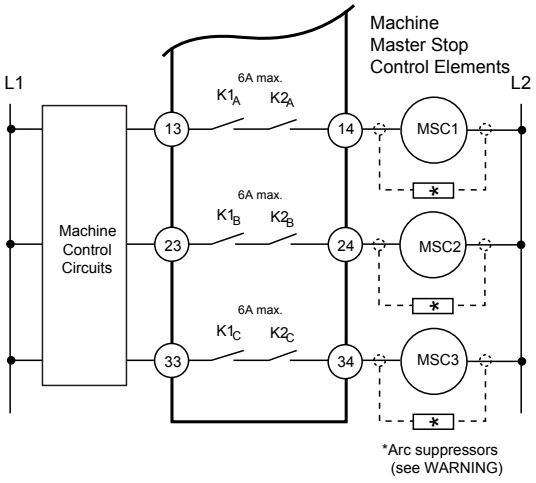

Model UM-FA-11A

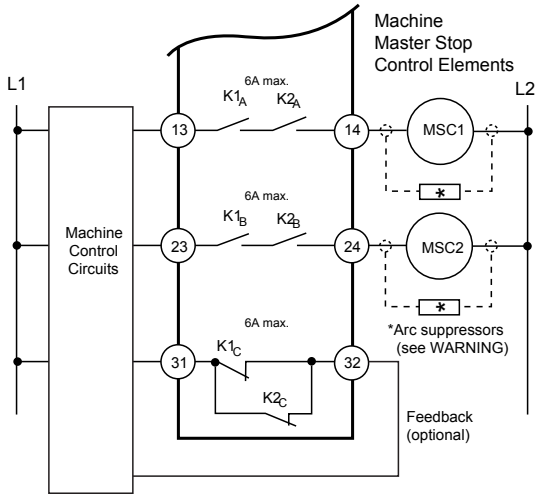

Connection of Reset Switch

The reset circuit switch can be any mechanical switch, such as a normally open momentary switch, or a two-position key switch. The reset switch must be capable of reliably switching 12 V DC at 10 to 20 milliamps. As shown in the hookup configurations in "Safety Input Device Wiring Options" on page 4, the reset switch connects between terminals S11 and S33 of the Safety Module.

The reset switch must be located outside of – and not be accessible from – the area of dangerous motion, and must be positioned so that any area of dangerous motion may be observed by the switch operator during the reset procedure. See warning, Reset Switch Location.

WARNING:
- **Install reset switches properly**
- Failure to properly install reset switches could result in serious injury or death.
- Install reset switches so that they are accessible only from outside, and in full view of, the safeguarded space. Reset switches cannot be accessible from within the safeguarded space. Protect reset switches against unauthorized or inadvertent operation (for example, through the use of rings or guards). If there are any hazardous areas that are not visible from the reset switches, provide additional safeguarding.

Automatic Reset Mode

The Safety Module may be used also with automatic reset. If no MSC-monitor contacts are monitored, a jumper must be installed between terminals S33 and S34 (see the wiring configurations in "Safety Input Device Wiring Options" on page 4). The Safety Module will reset and the outputs energize as soon as the inputs return to an ON or "closed-contact" state (after 250 ms OFF state).

The automatic reset mode is useful for some automated processes. However, if automatic reset is used, it is necessary to provide an alternate means of preventing resumption of hazardous machine motion, until an alternate reset procedure is performed. The alternate procedure must include a reset/restart switch, located outside the area of dangerous motion, which is positioned so that any area of dangerous motion may be observed by the switch operator during the reset procedure. See Warning below.

WARNING:
- **Reset routine required**
- Failure to prevent the machine from restarting without actuating the normal start command/device can create an unsafe condition that could result in serious injury or death.
- Do not allow the machine to restart without actuating the normal start command/device. Perform the reset routine after clearing the cause of a stop condition, as required by U.S. and international standards.

© Banner Engineering Corp. All rights reserved. www.bannerengineering.com

NOTE: The minimum time required for the Module to be in a STOP or OFF condition is 250 milliseconds. This "recovery time" (OFF-state) is required for the internal circuitry of the Safety Module to normalize, allowing a reliable reset to occur. A lockout occurs if the Module is cycled too quickly. To clear the lockout, re-cycle the Module, meeting the minimum OFF time requirements.

Connection to the Machine to be Controlled

The machine hookup diagram shows a generic connection of the Safety Module's redundant output circuits to the master stop control elements (MSCs). An MSC is defined as an electrically powered device, external to the Safety Module, which stops the machinery being controlled by immediately removing electrical power to the machine and (when necessary) by applying braking to dangerous motion. This stopping action is accomplished by removing power to the actuator of either MSC.

External Device Monitoring (EDM)

To satisfy the requirements of Control Reliability (OSHA and ANSI) Category 3 and 4 of ISO 13849-1 (EN954-1), the master stop control elements (MSCs) must each offer a normally closed, forced-guided (mechanically linked) monitor contact. Connect one normally closed monitor contact from each master stop control element in series to S33-S34 in Auto Reset mode and to S11-S33 in Manual Reset mode (see the hookup configurations in "Safety Input Device Wiring Options" on page 4).

In operation, if one of the switching contacts of either MSC fails in the energized condition, the associated monitor contact will remain open. Therefore, it will not be possible to reset the Safety Module. If no MSC-monitor contacts are monitored, a jumper must be installed as shown in the connection configurations in "Safety Input Device Wiring Options" on page 4. It is the user's responsibility to ensure that any single failure will not result in a hazardous condition and will prevent a successive machine cycle.

Overvoltage Category II and III Installations (EN 50178 and IEC 60664-1)

The UM-FA-xA Universal Module is rated for Overvoltage Category III when voltages of 1 V to 150 V AC/DC are applied to the output relay contacts. It is rated for Overvoltage Category II when voltages of 151 V to 250 V AC/DC are applied to the output relay contacts and no additional precautions are taken to attenuate possible overvoltage situations in the supply voltage. The UM-FA-xA Universal Module can be used in an Overvoltage Category III environment (with voltages of 151 V to 250 V AC/DC) if care is taken either to reduce the level of electrical disturbances seen by the UM-FA-xA Universal Module to Overvoltage Category II levels by installing surge suppressor devices (for example, arc suppressors), or to install extra external insulation in order to isolate both the UM-FA-xA Universal Module and the user from the higher voltage levels of a Category III environment.

For Overvoltage Category III installations with applied voltages from 151 V to 250 V AC/DC applied to the output contact(s): the UM-FA-xA Universal Module may be used under the conditions of a higher overvoltage category where appropriate overvoltage reduction is provided. Appropriate methods include:

- An overvoltage protective device
- A transformer with isolated windings
- A distribution system with multiple branch circuits (capable of diverting energy of surges)
- A capacitance capable of absorbing energy of surges
- A resistance or similar damping device capable of dissipating the energy of surges

When switching inductive AC loads, it is good practice to protect the UM-FA-xA Universal Module outputs by installing appropriately-sized arc suppressors. However, if arc suppressors are used, they must be installed across the load being switched (for example, across the coils of external safety relays), and never across the UM-FA-xA Universal Module's output contacts.

Checkout Procedures

Banner Engineering highly recommends performing the System checkouts as described. However, a qualified person (or team) should evaluate these generic recommendations considering their specific application and determine the appropriate frequency of checkouts. This will generally be determined by a risk assessment, such as the one contained in ANSI B11.0. The result of the risk assessment will drive the frequency and content of the periodic checkout procedures and must be followed.

CAUTION:

- **Disconnect power prior to checkout**
- Dangerous voltages might be present along the module wiring barriers whenever power to the machine control elements is on.
- Before performing the initial checkout procedure, disconnect all power from the machine to be controlled. Exercise extreme caution whenever machine control power is or might be present. Always disconnect power to the machine control elements before opening the enclosure housing of the module.

At installation or replacement and at machine set up, a Designated Person[3] must test each input device connected to the safety module for proper machine shutdown response. A Designated Person must check for proper operation, physical damage, mounting (looseness), and excessive environmental contamination. This must also take place on a periodic schedule determined by the user, based on the severity of the operating environment and the frequency of switching. Adjust, clean, repair, or replace components as needed when any parts or assemblies are damaged, broken, deformed, or badly worn; or if the electrical/mechanical specifications (for the environment and operating conditions) have been exceeded. **Always test the control system for proper functioning** under machine control conditions after performing maintenance, replacing the safety module, or replacing any component(s) of the safety circuit.

Initial Checkout

1. Remove power from the machine control elements.
2. Ensure the safety device is in a STOP or "open-contact" state (for example, actuate the E-stop switch to open its contacts).
3. Apply power to the Safety Module at terminals A1 and A2 (see the hookup configurations in "Safety Input Device Wiring Options" on page 4). Verify that only the Input Power indicator is ON ("Indicators and Adjustments" on page 2). If either input channel 1 (K1) or input channel 2 (K2) indicators are ON at this point, disconnect the input power and check all wiring. Return to step 2 after the cause of the problem has been corrected.
4. Reset or otherwise cause the safety device to reach an ON or "closed-contact" state (for example, arm the E-stop switch to close its contacts).
5. Reset the safety module.

Automatic:	Ch1 (K1) and Ch2 (K2) indicators should come ON, and the safety output contacts should close as soon as the input device(s) are ON.
Manual:	From an open condition, close the reset switch for approximately ¼ second, and then re-open. The Ch1 (K1) and Ch2 (K2) indicators should both come ON steady at this time. If either indicator comes ON before the reset switch is opened, disconnect the input power and check all wiring. Return to step 2 after correcting the problem.

6. Cause the safety device to generate a STOP or "open-contact" state (for example, actuate the E-stop switch to open its contacts). The Ch1 (K1) and Ch2 (K2) indicators should turn OFF simultaneously. If either indicator remains ON, disconnect the input power and check all wiring. Return to step 2 after the cause of the problem has been corrected.
7. If more than one safety device is series-connected to the Safety Module, run the above checkout procedure individually for EACH device.
8. Close and secure the enclosure in which the Safety Module is mounted. Apply power to the machine control elements and perform the Periodic Checkout Procedure.

[3] A Designated Person is identified in writing by the employer as being appropriately trained to perform a specified checkout procedure.

© Banner Engineering Corp. All rights reserved. www.bannerengineering.com

WARNING:
- **Test multiple safety devices individually**
- Failure to test each safety device individually could result in undetected faults and create an unsafe condition that could result in serious injury or death.
- When two or more safety devices are used, individually actuate each device, causing a stop or open-contact condition, then reset/rearm the safety module (if using manual reset mode). This allows the monitoring circuits to check each device and its wiring to detect faults.

Periodic Checkout

The functioning of the Safety Module and the device(s) connected to it must be verified on a regular periodic basis to ensure proper operation (see also the machine manufacturer's recommendations).

1. With the machine running, cause the safety device to generate a STOP or "open-contact" state (for example, actuate the E-stop switch to open its contacts). Verify that the machine stops as expected.
2. Reset or otherwise cause the safety device to reach an ON or "closed-contact" state. Verify that the machine does not restart.
3. If using manual reset mode, close the reset switch for approximately ¼ second and then open it. Verify that the machine can be restarted by normal initiation.
4. If more than one safety device is series-connected to the Safety Module, run the above checkout procedure individually for EACH device.

Repairs

Contact Banner Engineering for troubleshooting of this device. **Do not attempt any repairs to this Banner device; it contains no field-replaceable parts or components.** If the device, device part, or device component is determined to be defective by a Banner Applications Engineer, they will advise you of Banner's RMA (Return Merchandise Authorization) procedure.

Obtain assistance with product repairs by contacting your local Banner Engineering Corp distributor or by calling Banner directly at (763) 544-3164. Access literature translated into your native language on the Banner website at www.bannerengineering.com or contact Banner directly at (763) 544-3164.

Para reparaciones de productos, por favor contacte a su distribuidor local de Banner Engineering o llame a Banner directamente al 00 1 (763) 544-3164. Vea la literatura traducida en su idioma en el sitio web Banner en www.bannerengineering.com o comuníquese con Banner directamente al 00 1 (763) 544-3164.

Pour vous aider lors de la réparation de produits, contactez votre distributeur Banner local our appelez directement Banner au (763) 544-3164. La documentation traduite dans votre langue est disponible sur le site internet de Banner www.bannerengineering.com ou contactez directement Banner au (763) 544-3164.

请联系当地的 Banner Engineering Corp 经销商或直接致电 Banner +1 (763) 544-3164，以获得产品维修帮助。请访问邦纳网站 www.bannerengineering.com 或直接拨打 +1 (763) 544-3164 联系邦纳，获取翻译成您母语的资料。

제품 수리에 대한 지원은 지역 Banner Engineering Corp 대리점에 문의하거나 Banner에 직접 (763) 544-3164로 문의하실 수 있습니다. 사용자의 모국어로 번역된 자료는 Banner 웹사이트 www.bannerengineering.com에서 액세스하거나 Banner에 직접 (763) 544-3164로 문의하실 수 있습니다.

IMPORTANT: If instructed to return the device, pack it with care. Damage that occurs in return shipping is not covered by warranty.

WARNING:
- **Do not abuse the module after failure**—If an internal fault has occurred and the module will not reset, do not tap, strike, or otherwise attempt to correct the fault with a physical impact to the housing.
- Failure to follow these instructions could result in serious injury or death.
- An internal relay might have failed in such a manner that its replacement is required. If the module is not immediately replaced or repaired, multiple simultaneous failures might accumulate such that the safety function cannot be guaranteed.

Specifications

Supply Voltage and Current

24 V DC ± 10% (SELV-rated supply according to EN IEC 60950, NEC Class 2)

24 V AC ± 10%, 50/60Hz (NEC Class 2-rated transformer)

Power Consumption

Approx. 2 W / 2 VA

Supply Protection Circuitry

Protected against reverse polarity and transient voltages

Overvoltage Category

Output relay contact voltage 1 V to 150 V AC/DC: Category III

Output relay contact voltage 151 V to 250 V AC/DC: Category II (Category III, if appropriate overvoltage reduction is provided, as described.)

Pollution Degree

2

Output Response Time

25 milliseconds typical

Input Requirements: Safety Input Switch

2-Channel (contacts) wiring: 10 20 mA to 20 mA steady state at 12 V DC

Inputs are designed with a brief contact-cleaning current of 100 mA when initially closed.

Solid-State Dual Channel wiring: 5 to 20 mA steady state at 18 V DC to 28 V DC sourcing (PNP), < 2 mA leakage current

Single-Channel wiring: 40 100 mA to 100 mA at 24 V AC/DC ± 10%; 50/60 Hz

Input Requirements: Reset Switch

20 mA at 12 V DC, hard contact only

Minimum OFF-State Recovery Time

250 ms (When used with the AG4 Safety Laser Scanner, the "Restart delay time after PF release" must be configured for 280 ms or greater.)

Low Current Rating

The 5 µm gold-plated contacts allow the switching of low current/low voltage. In these low-power applications, multiple contacts can also be switched in series (for example, "dry switching"). To preserve the gold plating on the contacts, do not exceed the following max. values at any time:

Min. voltage: 1 V AC/DC
Max. voltage: 60 V
Min. current: 5 mA AC/DC
Max. current: 300 mA
Min. power: 5 mW (5 mVA)
Max. power: 7 W (7 VA)

Indicators

Three green LED indicators: Power ON, K1 energized, K2 energized

Construction

Polycarbonate housing. Rated NEMA 1, IEC IP40; Terminals IP20

Contacts: AgNi, 5 µm gold-plated

Terminal Torque

0.8 N·m (7 lb-in)

Maximum Wire Cross-Section for Connection

Each 1 × 2.5 mm^2 stranded ferruled

Each 1 × 4 mm^2 solid

Each 2 × 1.5 mm^2 stranded ferruled

Mounting

Mounts to standard 35 mm DIN rail track. Safety Module must be installed inside an enclosure rated NEMA 3 (IEC IP54), or better.

Output Configuration

Model UM-FA-9A: 3 normally open (NO) output channels

Model UM-FA-11A: 2 normally open (NO) output channels and 1 normally closed (N.C.) auxiliary output channel

Each normally open output channel is a series connection of contacts from two forced-guided (mechanically linked) relays, K1-K2. The normally closed Aux. output channel of the UM-FA-11A is a parallel connection of contacts from two forced-guided relays, K1-K2.

MTTFd

HIGH

DC

HIGH

PFHd

5.1×10^{-10}

Vibration Resistance

10 Hz to 55 Hz at 0.35 mm displacement per IEC 60068-2-6

Mechanical life

> 20,000,000 operations

Proof Test Interval

20 years

High Current Rating

If higher loads must be switched through one or more of the contacts, the minimum and maximum values of the contact(s) change to:

Min. voltage: 15 V AC/DC
Max. voltage: 250 V AC/DC
Min. current: 30 mA AC/DC
Max. current: 6 A for UM-FA-9A; 7 A for UM-FA-11A
Min. power: 0.45 W (0.45 VA)
Max. power: 200 W (1,500 VA) for UM-FA-9Z; 200 W (1,750 VA) for UM-FA-11A

Electrical life (switching cycles of the output contacts, resistive load)

150,000 cycles at 1,500 VA; 1,000,000 cycles at 450 VA; 2,000,000 cycles at 250 VA; 5,000,000 cycles at 125 VA

Transient suppression is recommended when switching inductive loads. Install suppressors across load. Never install suppressors across output contacts (see Warning, Arc Suppressors).

Operating Conditions

0 °C to +50 °C (+32 °F to +122 °F)

90% at +50 °C maximum relative humidity (non-condensing)

© Banner Engineering Corp. All rights reserved. www.bannerengineering.com

Category / Performance Level (EN ISO13849-1)

Cat. 4 / PL e ("Figure: Dual-Channel Wiring Configuration for Devices with Hard Contacts" on page 5 or "Figure: Dual-Channel Wiring Configuration for Solid State Devices (+24 V DC Supply Only)" on page 5 with solid-state devices with short-circuit detection or with fault exclusions on external 2-channel wiring)

Cat. 3 / PL c ("Figure: Dual-Channel Wiring Configuration for Solid State Devices (+24 V DC Supply Only)" on page 5 with dry (hard/relay) contact switching +24 V DC or Solid-State devices without short-circuit detection)

Cat. 2 / PL c ("Figure: Single-Channel Wiring Configuration for Devices with Hard Contacts" on page 5 and "Figure: Single-Channel Wiring Configuration for Solid State Devices" on page 6)

SIL / SIL CL (IEC61508 and EN62061)

SIL 3 ("Figure: Dual-Channel Wiring Configuration for Devices with Hard Contacts" on page 5 or "Figure: Dual-Channel Wiring Configuration for Solid State Devices (+24 V DC Supply Only)" on page 5 with Solid-State devices with short-circuit detection or with fault exclusions on external 2-channel wiring)

SIL 2 ("Figure: Dual-Channel Wiring Configuration for Solid State Devices (+24 V DC Supply Only)" on page 5 with Solid-State devices without short-circuit detection, "Figure: Single-Channel Wiring Configuration for Devices with Hard Contacts" on page 5 and "Figure: Single-Channel Wiring Configuration for Solid State Devices" on page 6)

Certifications

Banner Engineering BV
Park Lane, Culliganlaan 2F bus 3
1831 Diegem, BELGIUM

Turck Banner LTD Blenheim House
Blenheim Court
Wickford, Essex SS11 8YT
GREAT BRITAIN

c UL us LISTED EMERGENCY STOP DEVICE 29YL

Required Overcurrent Protection

WARNING: Electrical connections must be made by qualified personnel in accordance with local and national electrical codes and regulations.

Overcurrent protection is required to be provided by end product application per the supplied table.

Overcurrent protection may be provided with external fusing or via Current Limiting, Class 2 Power Supply.

Supply wiring leads < 24 AWG shall not be spliced.

For additional product support, go to www.bannerengineering.com.

Supply Wiring (AWG)	Required Overcurrent Protection (A)	Supply Wiring (AWG)	Required Overcurrent Protection (A)
20	5.0	26	1.0
22	3.0	28	0.8
24	2.0	30	0.5

Dimensions

All measurements are listed in millimeters [inches], unless noted otherwise. The measurements provided are subject to change.

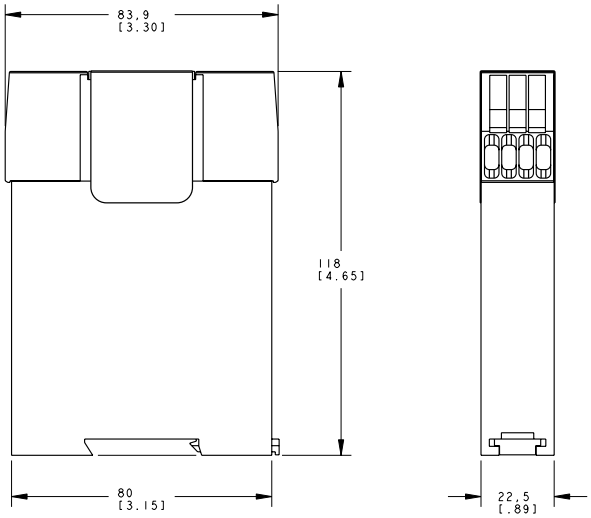

Certifications and Standards

EU/UK Declaration of Conformity (DoC)

Banner Engineering Corp. herewith declares that these products are in conformity with the provisions of the listed directives and all essential health and safety requirements have been met. For the complete DoC, please go to www.bannerengineering.com.

Product	Directive
UM-FA-9A and UM-FA-11A Universal Safety Module for industrial control	EU: 2006/42/EC
	UKCA: Machinery (Safety) Regulation 2008

Representative in EU: Spiros Lachandidis, Managing Director, **Banner Engineering BV** Park Lane | Culliganlaan 2F bus 3 | 1831 Diegem, BELGIUM

Representative in UK: Tony Coghlan, Managing Director, **Turck Banner LTD** Blenheim House | Blenheim Court | Wickford, Essex SS11 8YT | Great Britain

Standards and Regulations

The list of standards below is included as a convenience for users of this Banner device. Inclusion of the standards below does not imply that the device complies specifically with any standard, other than those specified in the Specifications section of this manual.

U.S. Application Standards

ANSI B11.0 Safety of Machinery

ANSI B11.19 Performance Requirements for Risk Reduction Measures: Safeguarding and Other Means of Reducing Risk

NFPA 79 Electrical Standard for Industrial Machinery

© Banner Engineering Corp. All rights reserved. www.bannerengineering.com

International/European Standards

ISO 12100 Safety of Machinery – General Principles for Design – Risk Assessment and Risk Reduction

EN 60204-1 Electrical Equipment of Machines Part 1: General Requirements

ISO 14119 (EN 1088) Interlocking Devices Associated with Guards – Principles for Design and Selection

ISO 14120 Safety of machinery – Guards – General requirements for the design and construction of fixed and movable guards

ISO 13857 Safety of Machinery – Safety Distances to Prevent Hazard Zones Being Reached

ISO 13850 (EN 418) Emergency Stop Devices, Functional Aspects – Principles for Design

EN 13855 (EN 999) The Positioning of Protective Equipment in Respect to Approach Speeds of Parts of the Human Body

IEC 61508 Functional Safety of Electrical/Electronic/Programmable Electronic Safety-Related Systems

IEC 62061 Safety of Machinery – Functional Safety of Safety-Related Control Systems

ISO 13849-1 Safety of Machinery – Safety-Related Parts of Control Systems – Part 1: General Principles for Design

IEC 60947-1 Low Voltage Switchgear – General Rules

IEC 60947-5-1 Low Voltage Switchgear – Electromechanical Control Circuit Devices

IEC 60947-5-5 Low Voltage Switchgear – Electrical Emergency Stop Device with Mechanical Latching Function

IEC 60529 Degrees of Protection Provided by Enclosures

Banner Engineering Corp Limited Warranty

Banner Engineering Corp. warrants its products to be free from defects in material and workmanship for one year following the date of shipment. Banner Engineering Corp. will repair or replace, free of charge, any product of its manufacture which, at the time it is returned to the factory, is found to have been defective during the warranty period. This warranty does not cover damage or liability for misuse, abuse, or the improper application or installation of the Banner product.

THIS LIMITED WARRANTY IS EXCLUSIVE AND IN LIEU OF ALL OTHER WARRANTIES WHETHER EXPRESS OR IMPLIED (INCLUDING, WITHOUT LIMITATION, ANY WARRANTY OF MERCHANTABILITY OR FITNESS FOR A PARTICULAR PURPOSE), AND WHETHER ARISING UNDER COURSE OF PERFORMANCE, COURSE OF DEALING OR TRADE USAGE.

This Warranty is exclusive and limited to repair or, at the discretion of Banner Engineering Corp., replacement. **IN NO EVENT SHALL BANNER ENGINEERING CORP. BE LIABLE TO BUYER OR ANY OTHER PERSON OR ENTITY FOR ANY EXTRA COSTS, EXPENSES, LOSSES, LOSS OF PROFITS, OR ANY INCIDENTAL, CONSEQUENTIAL OR SPECIAL DAMAGES RESULTING FROM ANY PRODUCT DEFECT OR FROM THE USE OR INABILITY TO USE THE PRODUCT, WHETHER ARISING IN CONTRACT OR WARRANTY, STATUTE, TORT, STRICT LIABILITY, NEGLIGENCE, OR OTHERWISE.**

Banner Engineering Corp. reserves the right to change, modify or improve the design of the product without assuming any obligations or liabilities relating to any product previously manufactured by Banner Engineering Corp. Any misuse, abuse, or improper application or installation of this product or use of the product for personal protection applications when the product is identified as not intended for such purposes will void the product warranty. Any modifications to this product without prior express approval by Banner Engineering Corp will void the product warranties. All specifications published in this document are subject to change; Banner reserves the right to modify product specifications or update documentation at any time. Specifications and product information in English supersede that which is provided in any other language. For the most recent version of any documentation, refer to: www.bannerengineering.com.

For patent information, see www.bannerengineering.com/patents.

© Banner Engineering Corp. All rights reserved. www.bannerengineering.com