# K50 General Purpose Indicator

## Features

*50 mm Multicolor LED Indicator*



- Bright, uniform indicator light
- Rugged IP69K per ISO 20653 and IP67-rated design
- 18 V DC to 30 V DC operation
- Operate up to three colors in one device
- Up to six colors to choose from
- PNP or NPN models available
- Variety of connector options

## Models

Not all model combinations or models listed are available. Contact Banner Engineering for details or search for a desired model number at www.bannerengineering.com.

| Family | LED Color | | | Input | Connector[1] |
|---|---|---|---|---|---|
| K50L | G | R | Y | P | Q |
| | C1 | C2 | C3 | | |
| | G = Green | | | | |
| | R = Red | | | | Blank = 2 m (6.5 ft) integral PVC-jacketed cable |
| K50L | Y = Yellow | | | P = PNP | Q = Integral 4-pin M12 male quick-disconnect connector |
| K50FL | B = Blue | | | N = NPN | QP = 150 mm (6 in) PVC-jacketed cable with a 4-pin M12 male quick-disconnect connector |
| | W = White | | | | QPMA = 100 mm (6 in) PUR-jacketed cable with a 4-pin M12 quick-disconnect connector |
| | O = Orange | | | | |
| | X = No color[2] | | | | |

## Wiring

**4-pin M12 Male Pinout**

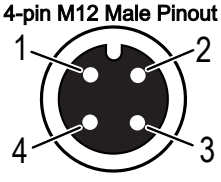


**PNP Input**

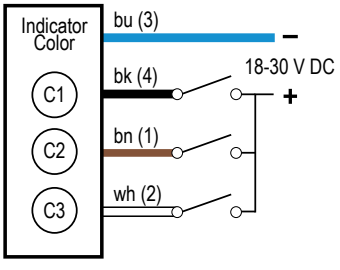


**NPN Input**

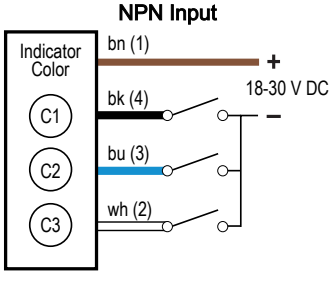


## Specifications

**Supply Voltage and Current**
18 V DC to 30 V DC
40 mA maximum current per color

**Supply Protection Circuitry**
Protected against reverse polarity and transient voltages

**Leakage Current Immunity**
400 µA

**Input Response Time**
Indicator On/Off: 1 ms maximum

[1] Models with a quick-disconnect connector require a mating cordset.
[2] LED color designated with X also indicates that the associated input wire is not used.

Original Instructions
23-Oct-26

© Banner Engineering Corp. All rights reserved.
www.bannerengineering.com

203619
p/n: 203619 Rev. E

ПРОМЭЛЕКТРОНИКА/ sales@prom-elec.com

### Connections

Integral 4-pin M12 male quick-disconnect connector, 150 mm (6 in) PVC-jacketed or PUR-jacketed cable with a 4-pin M12 male quick-disconnect connector, or 2 m (6.5 ft) integral PVC-jacketed cable, depending on model

### Construction

Base and dome: Polycarbonate

### Mounting

M30 × 1.5 threaded base, maximum torque 4.5 N·m (40 in-lbf)

Mounting nut included

### Environmental Rating

Quick-disconnect models meet IP69K per ISO 20653

Cable models rated IP67

**NOTE:** Cable models meet IP69K per ISO 20653 if the cable and cable entrance is protected from high-pressure spray.

### Vibration and Mechanical Shock

All models meet MIL-STD-202F, Method 201A (Vibration: 10 Hz to 60 Hz maximum, 0.06 inch (1.52 mm) double amplitude, 10G maximum acceleration) requirements. Also meets IEC 60947-5-2 (Shock: 30G 11 ms duration, half sine wave) requirements.

### Operating Conditions

–40 °C to +50 °C (–40 °F to +122 °F)

### Indicator Characteristics

| Color | Dominant Wavelength (nm) or Color Temperature (CCT) | Lumen Output (Typical at 25 °C) |
|---|---|---|
| Green | 528 nm | 20 |
| Red | 625 nm | 6.0 |
| Yellow | 590 nm | 20 |
| Blue | 470 nm | 5.0 |
| Orange | 608 nm | 11 |
| White | 6000 K | 16 |

### Required Overcurrent Protection

**WARNING:** Electrical connections must be made by qualified personnel in accordance with local and national electrical codes and regulations.

Overcurrent protection is required to be provided by end product application per the supplied table.

Overcurrent protection may be provided with external fusing or via Current Limiting, Class 2 Power Supply.

Supply wiring leads < 24 AWG shall not be spliced.

For additional product support, go to www.bannerengineering.com.

| Supply Wiring (AWG) | Required Overcurrent Protection (A) | Supply Wiring (AWG) | Required Overcurrent Protection (A) |
|---|---|---|---|
| 20 | 5.0 | 26 | 1.0 |
| 22 | 3.0 | 28 | 0.8 |
| 24 | 2.0 | 30 | 0.5 |

### Certifications

Banner Engineering BV
Park Lane, Culliganlaan 2F bus 3
1831 Diegem, BELGIUM

UL applies to K50L models only

## FCC Part 15 Class B for Unintentional Radiators

(Part 15.105(b)) This equipment has been tested and found to comply with the limits for a Class B digital device, pursuant to part 15 of the FCC Rules. These limits are designed to provide reasonable protection against harmful interference in a residential installation. This equipment generates, uses, and can radiate radio frequency energy and, if not installed and used in accordance with the instructions, may cause harmful interference to radio communications. However, there is no guarantee that interference will not occur in a particular installation. If this equipment does cause harmful interference to radio or television reception, which can be determined by turning the equipment off and on, the user is encouraged to try to correct the interference by one or more of the following measures:

- Reorient or relocate the receiving antenna.
- Increase the separation between the equipment and receiver.
- Connect the equipment into an outlet on a circuit different from that to which the receiver is connected.
- Consult the dealer or an experienced radio/TV technician for help.

(Part 15.21) Any changes or modifications not expressly approved by the party responsible for compliance could void the user's authority to operate this equipment.

## Industry Canada ICES-003(B)

This device complies with CAN ICES-3 (B)/NMB-3(B). Operation is subject to the following two conditions: 1) This device may not cause harmful interference; and 2) This device must accept any interference received, including interference that may cause undesired operation.

Cet appareil est conforme à la norme NMB-3(B). Le fonctionnement est soumis aux deux conditions suivantes : (1) ce dispositif ne peut pas occasionner d'interférences, et (2) il doit tolérer toute interférence, y compris celles susceptibles de provoquer un fonctionnement non souhaité du dispositif.


© Banner Engineering Corp. All rights reserved.
www.bannerengineering.com

# Dimensions

All measurements are listed in millimeters [inches], unless noted otherwise. The measurements provided are subject to change.

**K50L Models**

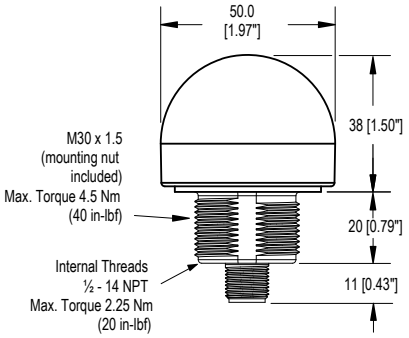


**K50FL Models**

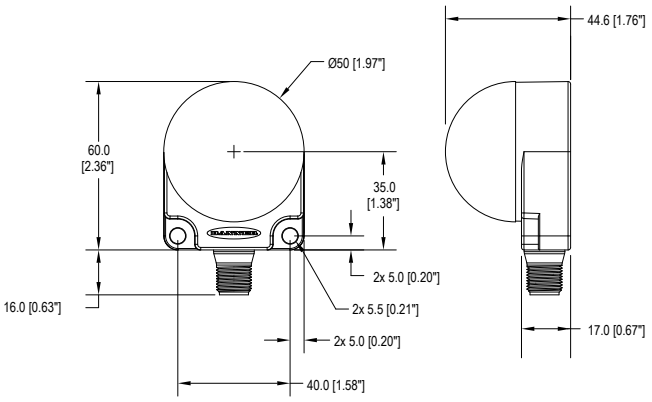


**K50L Cabled Models**

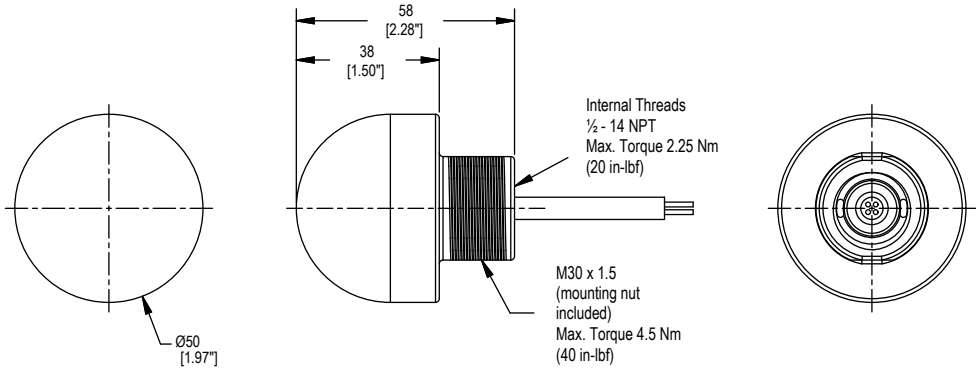


# Accessories

## Cordsets

| 4-Pin A-Code Single-Ended M12 Female Cordsets (datasheet p/n 235937) | | | | |
|---|---|---|---|---|
| **Model** | **Length** | **Dimensions (mm)** | **Pinout (Female)** | |
| **BC-M12F4-22-1** | 1 m (3.28 ft) | 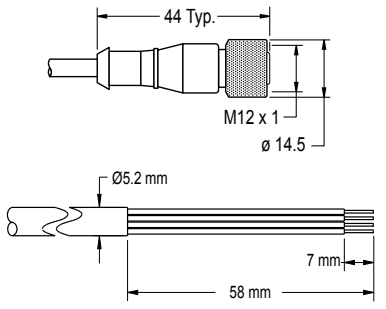 | 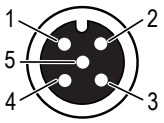 | 1 = Brown<br>2 = White<br>3 = Blue<br>4 = Black<br>5 = Unused<br>c UL us LISTED |
| **BC-M12F4-22-2** | 2 m (6.56 ft) | | | |
| **BC-M12F4-22-5** | 5 m (16.4 ft) | | | |
| **BC-M12F4-22-8** | 8 m (26.25 ft) | | | |
| **BC-M12F4-22-10** | 10 m (30.81 ft) | | | |
| **BC-M12F4-22-15** | 15 m (49.2 ft) | | | |
| **BC-M12F4-22-20** | 20 m (65.61 ft) | | | |
| **BC-M12F4-22-25** | 25 m (82.02 ft) | | | |
| **BC-M12F4-22-30** | 30 m (98.42 ft) | | | |


© Banner Engineering Corp. All rights reserved.
www.bannerengineering.com

| 4-Pin A-Code Single-Ended M12 Female Right-Angle Cordsets (datasheet p/n 235937) | | | | |
|---|---|---|---|---|
| **Model** | **Length** | **Dimensions (mm)** | **Pinout (Female)** | |
| **BC-M12F4A-22-1** | 1 m (3.28 ft) | 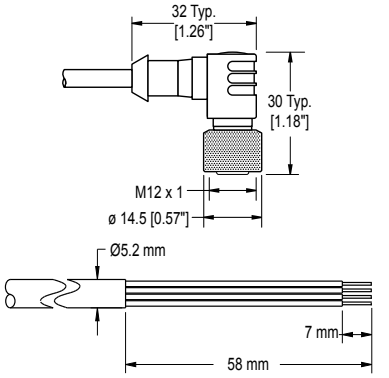 |  | 1 = Brown<br>2 = White<br>3 = Blue<br>4 = Black<br>5 = Unused |
| **BC-M12F4A-22-2** | 2 m (6.56 ft) | | | |
| **BC-M12F4A-22-5** | 5 m (16.4 ft) | | | |
| **BC-M12F4A-22-8** | 8 m (26.25 ft) | | | |
| **BC-M12F4A-22-10** | 10 m (30.81 ft) | | | |
| **BC-M12F4A-22-15** | 15 m (49.2 ft) | | | |

# Brackets

**SMB30A**

- Right-angle bracket with curved slot for versatile orientation
- Clearance for M6 (¼ in) hardware
- Mounting hole for 30 mm sensor
- 12-gauge stainless steel
- CAD Files: DXF, PDF, IGS, STP

**Hole center spacing:** A to B=40
**Hole size:** A=ø 6.3, B= 27.1 × 6.3, C=ø 30.5

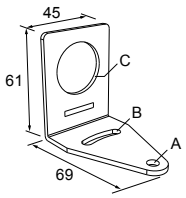


**SMB30FA**

- Swivel bracket with tilt and pan movement for precise adjustment
- Mounting hole for 30 mm sensor
- 12-gauge 304 stainless steel
- Easy sensor mounting to extrude rail T-slot
- Metric- and inch-size bolt available
- CAD Files: DXF, PDF, IGS, STP

**Bolt thread:** SMB30FA, A=3/8 - 16 × 2 in; SMB30FAL, A=3/8 - 16 × 4 in; SMB30FAM10, A=M10 - 1.5 × 50
**Hole size:** B=ø 30.1

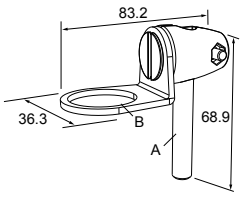


**SMB30FVK**

- V-clamp, flat bracket and fasteners for mounting to pipe or extensions
- Clamp accommodates 28 mm dia. tubing or 1 in. square extrusions
- 30 mm hole for mounting sensors
- CAD Files: DXF, PDF, IGS, STP

**Hole size:** A=ø 31

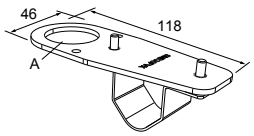


**SMB30MM**

- 12-gauge stainless steel bracket with curved mounting slots for versatile orientation
- Clearance for M6 (¼ in) hardware
- Mounting hole for 30 mm sensor
- CAD Files: DXF, PDF, IGS, STP

**Hole center spacing:** A=51, A to B=25.4
**Hole size:** A=42.6 × 7, B=ø 6.4, C=ø 30.1

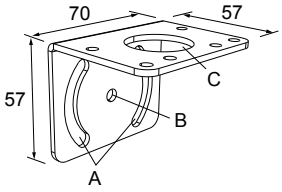


**SMB30RAVK**

- V-clamp, right-angle bracket and fasteners for mounting sensors to pipe or extrusion
- Clamp accommodates 28 mm dia. tubing or 1 in. square extrusions
- 30 mm hole for mounting sensors
- CAD Files: DXF, PDF, IGS, STP

**Hole size:** A=ø 30.5

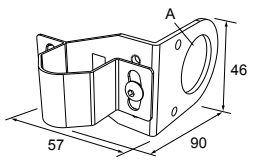



© Banner Engineering Corp. All rights reserved.
www.bannerengineering.com

**SMB30SC**

- Swivel bracket with 30 mm mounting hole for sensor
- Black reinforced thermoplastic polyester
- Stainless steel mounting and swivel locking hardware included
- CAD Files: DXF, PDF, IGS, STP

**Hole center spacing:** A=ø 50.8
**Hole size:** A=ø 7.0, B=ø 30.0

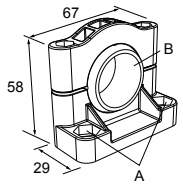


**SMBAMS30P**

- Flat SMBAMS series bracket
- 30 mm hole for mounting sensors
- Articulation slots for 90°+ rotation
- 12-gauge 300 series stainless steel
- CAD Files: DXF, PDF, IGS, STP

**Hole center spacing:** A=26.0, A to B=13.0
**Hole size:** A=26.8 × 7.0, B=ø 6.5, C=ø 31.0

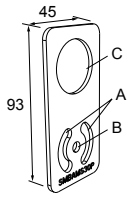


**SMBAMS30RA**

- Right-angle SMBAMS series bracket
- 30 mm hole for mounting sensors
- Articulation slots for 90°+ rotation
- 12-gauge (2.6 mm) cold-rolled steel
- CAD Files: DXF, PDF, IGS, STP

**Hole center spacing:** A=26.0, A to B=13.0
**Hole size:** A=26.8 × 7.0, B=ø 6.5, C=ø 31.0

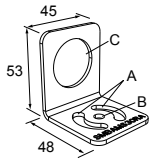


# Banner Engineering Corp Limited Warranty

Banner Engineering Corp. warrants its products to be free from defects in material and workmanship for one year following the date of shipment. Banner Engineering Corp. will repair or replace, free of charge, any product of its manufacture which, at the time it is returned to the factory, is found to have been defective during the warranty period. This warranty does not cover damage or liability for misuse, abuse, or the improper application or installation of the Banner product.

**THIS LIMITED WARRANTY IS EXCLUSIVE AND IN LIEU OF ALL OTHER WARRANTIES WHETHER EXPRESS OR IMPLIED (INCLUDING, WITHOUT LIMITATION, ANY WARRANTY OF MERCHANTABILITY OR FITNESS FOR A PARTICULAR PURPOSE), AND WHETHER ARISING UNDER COURSE OF PERFORMANCE, COURSE OF DEALING OR TRADE USAGE.**

This Warranty is exclusive and limited to repair or, at the discretion of Banner Engineering Corp., replacement. **IN NO EVENT SHALL BANNER ENGINEERING CORP. BE LIABLE TO BUYER OR ANY OTHER PERSON OR ENTITY FOR ANY EXTRA COSTS, EXPENSES, LOSSES, LOSS OF PROFITS, OR ANY INCIDENTAL, CONSEQUENTIAL OR SPECIAL DAMAGES RESULTING FROM ANY PRODUCT DEFECT OR FROM THE USE OR INABILITY TO USE THE PRODUCT, WHETHER ARISING IN CONTRACT OR WARRANTY, STATUTE, TORT, STRICT LIABILITY, NEGLIGENCE, OR OTHERWISE.**

Banner Engineering Corp. reserves the right to change, modify or improve the design of the product without assuming any obligations or liabilities relating to any product previously manufactured by Banner Engineering Corp. Any misuse, abuse, or improper application or installation of this product or use of the product for personal protection applications when the product is identified as not intended for such purposes will void the product warranty. Any modifications to this product without prior express approval by Banner Engineering Corp will void the product warranties. All specifications published in this document are subject to change; Banner reserves the right to modify product specifications or update documentation at any time. Specifications and product information in English supersede that which is provided in any other language. For the most recent version of any documentation, refer to: www.bannerengineering.com.

For patent information, see www.bannerengineering.com/patents.


© Banner Engineering Corp. All rights reserved.
www.bannerengineering.com