# M12 Front Mount Receptacles

## Features

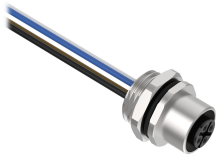

- M12, multiple length options
- Nickel-plated brass housing, unshielded, A-code connector
- Straight M12 connector, locknut included

## Models

*Model Key*

| Housing | — | Connector | Gender | Pin Count | Mounting Style | Threading | — | Length |
|---|---|---|---|---|---|---|---|---|
| **BR** | **—** | **M12** | **M** | **4** | **F** | **9** | **—** | **0.5** |
| BR = Banner Receptacle | | M12 | M = Male<br>F = Female | 4 = 4-pin<br>5 = 5-pin<br>8 = 8-pin<br>12 = 12-pin | F = Front Mount | 9 = PG9 | | 0.5 = 0.5 m<br>1 = 1 m<br>2 = 2 m |

| M12 Front Mount Receptacles - Female | | | | |
|---|---|---|---|---|
| **Model** | **Length** | **Dimensions (mm)** | **Pinout (Female)** | |
| BR-M12F4F9-0.5 | 0.5 m (1.64 ft) | 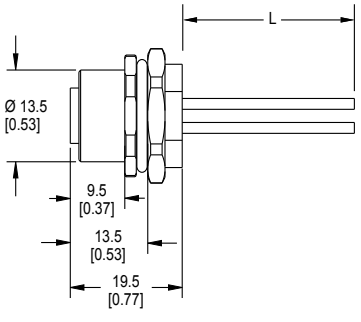 |  | 1 = Brown<br>2 = White<br>3 = Blue<br>4 = Black |
| BR-M12F4F9-1 | 1 m (3.28 ft) | | | |
| BR-M12F4F9-2 | 2 m (6.56 ft) | | | |
| BR-M12F5F9-0.5 | 0.5 m (1.64 ft) | | 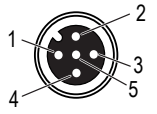 | 1 = Brown<br>2 = White<br>3 = Blue<br>4 = Black<br>5 = Gray |
| BR-M12F5F9-1 | 1 m (3.28 ft) | | | |
| BR-M12F5F9-2 | 2 m (6.56 ft) | | | |
| BR-M12F8F9-0.5 | 0.5 m (1.64 ft) | | 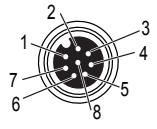 | 1 = White<br>2 = Brown<br>3 = Green<br>4 = Yellow<br>5 = Gray<br>6 = Pink<br>7 = Blue<br>8 = Red |
| BR-M12F8F9-1 | 1 m (3.28 ft) | | | |
| BR-M12F8F9-2 | 2 m (6.56 ft) | | | |
| BR-M12F12F9-0.5 | 0.5 m (1.64 ft) | | 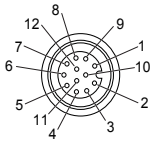 | 1 = White<br>2 = Brown<br>3 = Green<br>4 = Yellow<br>5 = Gray<br>6 = Pink<br>7 = Blue<br>8 = Red<br>9 = Orange<br>10 = Plum<br>11 = Black<br>12 = Violet |



© Banner Engineering Corp. All rights reserved.
www.bannerengineering.com

237730
p/n: 237730 Rev. F

ПРОМЭЛЕКТРОНИКА/ sales@prom-elec.com

| M12 Front Mount Receptacles - Male | | | | |
|---|---|---|---|---|
| **Model** | **Length** | **Dimensions (mm)** | **Pinout (Male)** | |
| BR-M12M4F9-0.5 | 0.5 m (1.64 ft) | 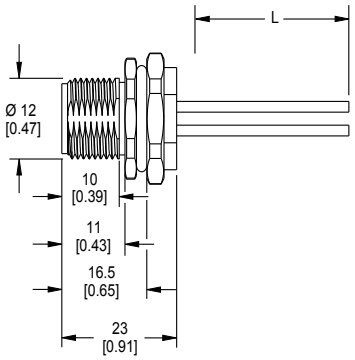 | 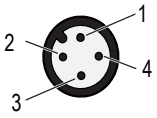 | 1 = Brown<br>2 = White<br>3 = Blue<br>4 = Black |
| BR-M12M4F9-1 | 1 m (3.28 ft) | | | |
| BR-M12M4F9-2 | 2 m (6.56 ft) | | | |
| BR-M12M5F9-0.5 | 0.5 m (1.64 ft) | | 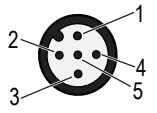 | 1 = Brown<br>2 = White<br>3 = Blue<br>4 = Black<br>5 = Gray |
| BR-M12M5F9-1 | 1 m (3.28 ft) | | | |
| BR-M12M5F9-2 | 2 m (6.56 ft) | | | |
| BR-M12M8F9-0.5 | 0.5 m (1.64 ft) | | 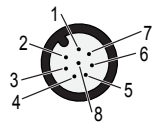 | 1 = White<br>2 = Brown<br>3 = Green<br>4 = Yellow<br>5 = Gray<br>6 = Pink<br>7 = Blue<br>8 = Red |
| BR-M12M8F9-1 | 1 m (3.28 ft) | | | |
| BR-M12M8F9-2 | 2 m (6.56 ft) | | | |
| BR-M12M12F9-0.5 | 0.5 m (1.64 ft) | | 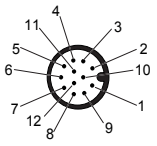 | 1 = White<br>2 = Brown<br>3 = Green<br>4 = Yellow<br>5 = Gray<br>6 = Pink<br>7 = Blue<br>8 = Red<br>9 = Orange<br>10 = Plum<br>11 = Black<br>12 = Violet |

# Specifications

**Current Rating**

4-pin and 5-pin receptacles: 4 A
8-pin receptacles: 2 A
12-pin receptacles: 1.5 A

**Voltage Rating**

4-pin and 5-pin receptacles: 60 V AC/DC
8-pin and 12-pin receptacles: 30 V AC/DC

**Conductors**

4-pin receptacles: 4 × 22
5-pin receptacles: 5 × 22
8-pin receptacles: 8 × 24
12-pin receptacles: 12 × 26

**Construction**

Conductor material: PVC
Contact carrier: TPU
Contacts: Gold-plated brass
Housing: Nickel-plated brass
Threading: PG9
O-Ring (female only): FKM rubber

**Operating Conditions**

Operating temperature: –20 °C to +70 °C (–4 °F to +158 °F)

**Environmental Rating**

IP67

# Recommended Panel Cut-Out

All measurements are listed in millimeters, unless noted otherwise. The measurements provided are subject to change.

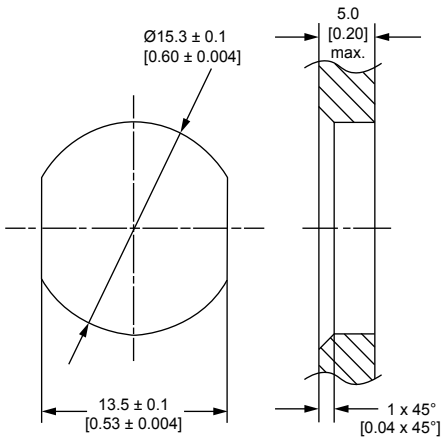


# Banner Engineering Corp Limited Warranty

Banner Engineering Corp. warrants its products to be free from defects in material and workmanship for one year following the date of shipment. Banner Engineering Corp. will repair or replace, free of charge, any product of its manufacture which, at the time it is returned to the factory, is found to have been defective during the warranty period. This warranty does not cover damage or liability for misuse, abuse, or the improper application or installation of the Banner product.


© Banner Engineering Corp. All rights reserved.
www.bannerengineering.com

**THIS LIMITED WARRANTY IS EXCLUSIVE AND IN LIEU OF ALL OTHER WARRANTIES WHETHER EXPRESS OR IMPLIED (INCLUDING, WITHOUT LIMITATION, ANY WARRANTY OF MERCHANTABILITY OR FITNESS FOR A PARTICULAR PURPOSE), AND WHETHER ARISING UNDER COURSE OF PERFORMANCE, COURSE OF DEALING OR TRADE USAGE.**

This Warranty is exclusive and limited to repair or, at the discretion of Banner Engineering Corp., replacement. **IN NO EVENT SHALL BANNER ENGINEERING CORP. BE LIABLE TO BUYER OR ANY OTHER PERSON OR ENTITY FOR ANY EXTRA COSTS, EXPENSES, LOSSES, LOSS OF PROFITS, OR ANY INCIDENTAL, CONSEQUENTIAL OR SPECIAL DAMAGES RESULTING FROM ANY PRODUCT DEFECT OR FROM THE USE OR INABILITY TO USE THE PRODUCT, WHETHER ARISING IN CONTRACT OR WARRANTY, STATUTE, TORT, STRICT LIABILITY, NEGLIGENCE, OR OTHERWISE.**

Banner Engineering Corp. reserves the right to change, modify or improve the design of the product without assuming any obligations or liabilities relating to any product previously manufactured by Banner Engineering Corp. Any misuse, abuse, or improper application or installation of this product or use of the product for personal protection applications when the product is identified as not intended for such purposes will void the product warranty. Any modifications to this product without prior express approval by Banner Engineering Corp will void the product warranties. All specifications published in this document are subject to change; Banner reserves the right to modify product specifications or update documentation at any time. Specifications and product information in English supersede that which is provided in any other language. For the most recent version of any documentation, refer to: www.bannerengineering.com.

For patent information, see www.bannerengineering.com/patents.


© Banner Engineering Corp. All rights reserved.
www.bannerengineering.com