MULTI-BEAM® 2-wire AC Logic Modules

Datasheet

For MULTI-BEAM modular photoelectric sensors

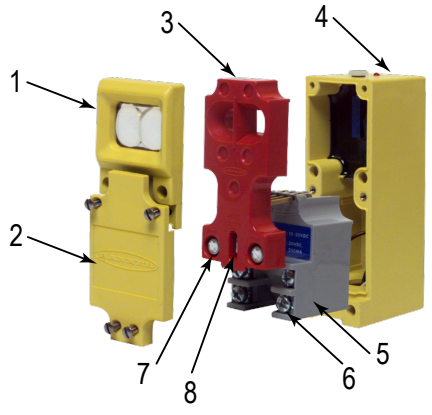

1 = Upper cover (lens), supplied with the scanner block
2 = Lower cover, supplied with the scanner block
3 = Logic module
4 = Scanner block housing
5 = Power block
6 = Wiring terminals
7 = Logic timing adjustment
8 = Light/Dark operate select

MULTI-BEAM modular components (scanner block, power block, and logic module) are all purchased separately.

WARNING:

- **Do not use this device for personnel protection**
- Using this device for personnel protection could result in serious injury or death.
- This device does not include the self-checking redundant circuitry necessary to allow its use in personnel safety applications. A device failure or malfunction can cause either an energized (on) or de-energized (off) output condition.

Models

In the table below, the signal represents the light condition (in LIGHT operate) or the dark condition (in DARK operate), and the output represents the energized condition of the solid-state output switch (power block). Delay refers to the time delay before the output operates, and hold refers to the time that the output remains on after the event has occurred.

Model	Function	Description
2LM3	**on-off** OUTPUT SIGNAL	The 2LM3 is an on/off logic module that has the ability to be programmed for either LIGHT or DARK operate. It comes with a jumper wire installed. With the jumper in place, the output is DARK operate; with the jumper removed, the output is LIGHT operate. Use the 2LM3 when no timing function is desired.
2LM4-2	**one-shot (retriggerable)** HOLD HOLD OUTPUT SIGNAL Setable time range: 0.1 to 1 second.	The 2LM4-2 provides a one-shot (single shot) pulse each time there is a transition from LIGHT to DARK (jumper installed) or from DARK to LIGHT (jumper removed). The output pulse time range is from 0.01 seconds to 1 second. The duration of the output pulse is independent of the duration of the input signal. The timing of the 2LM4-2 restarts each time the input signal is removed and then reapplied. This is referred to as a retriggerable one-shot, and this feature may be applied to some rate sensing applications.
2LM5	**on-delay** DELAY OUTPUT SIGNAL Setable time range: 1.5 to 15 seconds.	The 2LM5 is a true on-delay logic module. The input signal must be present for a predetermined length of time before the output is energized. The output then remains energized until the input signal is removed. If the input signal is not present for the predetermined time period, no output occurs. If the input signal is removed momentarily and then reestablished, the timing function starts over again from the beginning. The standard time range is 0.15 seconds to 15 seconds (field adjustable), and other ranges are available.

Original Document
03507 Rev. B

10 February 2020

03507

ПРОМЭЛЕКТРОНИКА/ sales@prom-elec.com

Model	Function	Description
2LM5R	off-delay 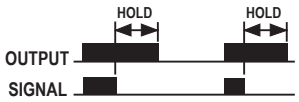 Setable time range: 1.5 to 15 seconds.	The 2LM5R us an off-delay logic module, similar to the 2LM5, except that timing begins on the trailing edge of the input signal. When the input occurs, the output is immediately energized; if the input is then removed, the output remains energized for the adjustable predetermined time period, then de-energizes. If the input is removed but then reestablished while the timing is holding the output energized, a new output cycle is begun. The LIGHT/DARK operate jumper wire option is included. Timing range is 0.15 seconds to 15 seconds, and optional ranges are available.
2LM5-14	on- & off-delay 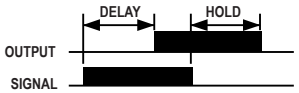 Setable time range: 1.5 to 15 seconds.	The 2LM5-14 combines the function of an on-delay and an off-delay into one logic module. When the signal is present for more than the output on-delay time, the output energizes. The off-delay circuit is now active, and holds the output on even if the input signal disappears for short periods of time. If the input signal is gone for longer than the off-delay time, the output finally drops out. The time delays can control high and low levels in flow control applications. Each delay is independently adjustable for 0.15 seconds to 15 seconds.
2LM5T	limit timer 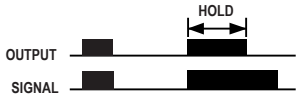 Setable time range: 1.5 to 15 seconds.	The 2LM5T limit timer combines the function of on/off logic and on-delay logic. As long as the signal is present for only short periods of time, the output follows the action of the input signal. If the input signal is present for longer than the predetermined time, the output de-energizes. The output re-energizes only when the input signal is removed and then reestablished. Interval timers are used to operate loads which must not run continuously for long periods of time, such as intermittent duty solenoids and conveyor motors. Timing range is 0.15 seconds to 15 seconds.
LMT Test Logic		Model LMT is a plug-in test logic module for use in troubleshooting MULTI-BEAM sensors. It contains LED indicator lights in place of the timing potentiometers and a miniature switch in place of the LIGHT/DARK operate jumper. The indicator lights display the operation of the scanner block and power block to verify proper functioning, and the switch permits manual operation of the load to verify the output switching circuit. The step-by-step testing procedure included with the LMT allows a MULTI-BEAM to be completely tested without removing it from the installation, and if there is a faulty scanner block, power block, or logic module, the LMT identifies it.

Overview

A Banner MULTI-BEAM Sensor is a compact modular self-contained photoelectric switch consisting of three components: a scanner block, a power block, and a logic module.

The **scanner** block comprises the housing for the sensor and contains a complete modulated photoelectric amplifier, the emitter and receiver optoelements and lenses, and space for the other modules.

The **power** block module provides the interface between the scanner block and the external circuit. It contains a power supply for the MULTI-BEAM plus a switching device (except in emitter-only power blocks) to interface the sensor to the circuit to be controlled.

The **logic** module interconnects the power block and scanner block both electrically and mechanically. It provides the desired timing logic function (if any) plus the ability to program the output for either light- or dark-operate.

The emitters of MULTI-BEAM opposed mode emitter/receiver pairs do not require a logic module. Emitter scanner blocks are supplied with a blade-pin to interconnect the scanner block and power block. Power block and logic modules are purchased separately. This modular design, with field-replaceable power block and logic modules, permits a large variety of sensor configurations, resulting in exactly the right sensor for any photoelectric application.

Logic Modules

The logic module interconnects the power block and scanner block both electrically and mechanically using a unique blade-and-socket connector concept. It also provides the LIGHT/DARK operate function and the timing functions, all of which are fully adjustable.

All MULTI-BEAM 2-wire logic modules are color-coded black, and are for use only in MULTI-BEAM 2-wire sensors. The time ranges specified for the logic modules are standard time ranges. For additional time ranges, see Modifications on p. 3.



Figure 1. Logic Module

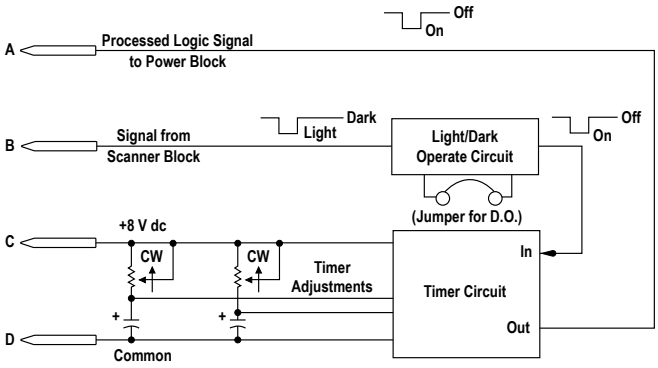

Figure 2. Functional Schematic

Modifications

The time ranges of any MULTI-BEAM logic module may be factory modified. Time range modification is often necessary to improve the setability of the timing function. Some time range modifications are carried in stock. Other time range modifications may be quoted. When ordering modified logic modules, add the letter M after the model number, followed by the maximum time desired (in seconds). The table below lists possible modifications.

Model Number Suffix	Setable Time Range
M.01	0.001 seconds to 0.01 seconds
M.1	0.01 seconds to 0.1 seconds
M.5	0.05 seconds to 0.5 seconds
M1	0.1 seconds to 1 second
M5	0.5 seconds to 5 seconds
M15	1.5 seconds to 15 seconds

- **For logic modules with a single timing function**, specify the maximum desired time in seconds (for example, LM5M5 indicates an LM5 on-delay with the delay time adjustable up to 5 seconds).
- **For logic modules with dual timing functions**, specify the maximum desired delay and hold time in seconds (for example, LM5-14M1M5 indicates an LM5-14 on-off delay with an on-delay adjustable up to 1 second and an off-delay adjustable up to 5 seconds). Always specify both timing ranges, even if only one is to be modified.
- **For fixed timing**, the letter F should always be followed by the desired time, in seconds (for example, LM5MF1 would be an LM5 on-delay with a fixed 1 second delay time). For fractions of seconds, use decimal equivalents, such as LM5MF.5, LM5MF.01, etc.

Specifications

Construction
Molded PBT polyester housing; electronic components epoxy encapsulated
Gold plated blade connectors

Operating Temperature
–40 °C to +70 °C (–40 °F to +158 °F)

Timing Adjustment(s)
One or two single turn potentiometers with slot for blade-type screwdriver adjustment

Note: When turning time adjustments fully clockwise or counterclockwise, avoid excessive torque to prevent damage to potentiometers.

Timing Repeatability
±2% of maximum range under constant power supply and temperature conditions; ±5% of maximum range under all conditions of supply voltage and temperature

Response Time
Response time will be that for the scanner block plus the power block (plus the programmed delay if the logic includes a delay function)

Timing Range
Useful range is from maximum time down to 10% of maximum (for example, from 1 second to 0.1 seconds, or from 15 seconds to 1.5 seconds). When the timing potentiometer is set fully counterclockwise, time is approximately 1% of maximum.

Banner Engineering Corp. Limited Warranty

Banner Engineering Corp. warrants its products to be free from defects in material and workmanship for one year following the date of shipment. Banner Engineering Corp. will repair or replace, free of charge, any product of its manufacture which, at the time it is returned to the factory, is found to have been defective during the warranty period. This warranty does not cover damage or liability for misuse, abuse, or the improper application or installation of the Banner product.

THIS LIMITED WARRANTY IS EXCLUSIVE AND IN LIEU OF ALL OTHER WARRANTIES WHETHER EXPRESS OR IMPLIED (INCLUDING, WITHOUT LIMITATION, ANY WARRANTY OF MERCHANTABILITY OR FITNESS FOR A PARTICULAR PURPOSE), AND WHETHER ARISING UNDER COURSE OF PERFORMANCE, COURSE OF DEALING OR TRADE USAGE.

This Warranty is exclusive and limited to repair or, at the discretion of Banner Engineering Corp., replacement. **IN NO EVENT SHALL BANNER ENGINEERING CORP. BE LIABLE TO BUYER OR ANY OTHER PERSON OR ENTITY FOR ANY EXTRA COSTS, EXPENSES, LOSSES, LOSS OF PROFITS, OR ANY INCIDENTAL, CONSEQUENTIAL OR SPECIAL DAMAGES RESULTING FROM ANY PRODUCT DEFECT OR FROM THE USE OR INABILITY TO USE THE PRODUCT, WHETHER ARISING IN CONTRACT OR WARRANTY, STATUTE, TORT, STRICT LIABILITY, NEGLIGENCE, OR OTHERWISE.**

Banner Engineering Corp. reserves the right to change, modify or improve the design of the product without assuming any obligations or liabilities relating to any product previously manufactured by Banner Engineering Corp. Any misuse, abuse, or improper application or installation of this product or use of the product for personal protection applications when the product is identified as not intended for such purposes will void the product warranty. Any modifications to this product without prior express approval by Banner Engineering Corp will void the product warranties. All specifications published in this document are subject to change; Banner reserves the right to modify product specifications or update documentation at any time. Specifications and product information in English supersede that which is provided in any other language. For the most recent version of any documentation, refer to: www.bannerengineering.com.

For patent information, see www.bannerengineering.com/patents.

© Banner Engineering Corp. All rights reserved