EZ-SCREEN® LS Basic Safety Light Curtain

Instruction Manual

Original Instructions
204120 Rev. G
31 October 2022
© Banner Engineering Corp. All rights reserved

204120

ПРОМЭЛЕКТРОНИКА/ sales@prom-elec.com

Contents

1 About This Document 4
1.1 Important... Read This Before Proceeding! 4
1.2 Use of Warnings and Cautions 4
1.3 EU/UK Declaration of Conformity (DoC) 4
2 Standards and Regulations 6
2.1 Applicable U.S. Standards 6
2.2 Applicable OSHA Regulations 6
2.3 International/European Standards 6
3 Product Overview 8
3.1 Appropriate Applications and Limitations 9
3.1.1 Appropriate Applications 9
3.1.2 Examples: Inappropriate Applications 9
3.1.3 Control Reliability: Redundancy and Self-Checking 10
3.2 Models 10
3.2.1 Models Table 12
3.3 Operating Features 12
3.3.1 Trip Output 12
3.3.2 External Device Monitoring (EDM) 12
3.3.3 Fault Output 12
3.3.4 Scan Code Configuration 13
3.3.5 Wiring Options 13
3.3.6 EZ-LIGHT® Indication 14
3.3.7 Status Indicators 14
4 Specifications 16
4.1 General Specifications 16
4.2 Receiver Specifications 17
4.3 Emitter Specifications 17
4.4 Dimensions 18
4.5 Mounting Dimensions 19
5 Mechanical Installation 21
5.1 Mechanical Installation Considerations 21
5.1.1 Calculating the Safety Distance (Minimum Distance) 21
5.1.2 Formula and Examples 22
5.1.3 Reducing or Eliminating Pass-Through Hazards 24
5.1.4 Supplemental Safeguarding 24
5.1.5 Reset Switch Location 25
5.1.6 Adjacent Reflective Surfaces 26
5.1.7 Use of Corner Mirrors 28
5.1.8 Emitter and Receiver Orientation 29
5.1.9 Installation of Multiple Systems 30
5.2 Mounting System Components 31
5.2.1 Mounting Hardware 31
5.2.2 Mounting the End-Mount Brackets 32
5.2.3 Mounting the Center- and Side-Mount Brackets 33
5.2.4 EZLSA-MBK-16 Side-Mount Bracket 33
5.2.5 Sensor Mounting and Mechanical Alignment 34
6 Electrical Installation and Testing 36
6.1 Routing Cordsets 36
6.2 Initial Electrical Connections 37
6.3 Initial Checkout Procedure 37
6.3.1 Configuring the System for Initial Checkout 38
6.3.2 Initial Power-Up 38
6.3.3 Optical Alignment 38
6.3.4 Optical Alignment Procedure with Mirrors 40
6.3.5 Perform a Trip Test 40
6.4 Electrical Connections to the Guarded Machine 41
6.4.1 OSSD Output Connections 42
6.4.2 FSD Interfacing Connections 42
6.4.3 Machine Primary Control Elements and EDM Input 43
6.4.4 External Device Monitoring 44
6.4.5 Fault Output 45
6.4.6 Scan Code Select 45
6.4.7 Preparing for System Operation 45

6.4.8 Sensor Interchangeability 45
6.5 Reference Wiring Diagrams 46
6.5.1 Generic Wiring Diagram—5-pin and 8-pin Emitter 46
6.5.2 Generic Wiring Diagram—5-pin Receiver and UM-FA-..A Safety Module 47
6.5.3 Generic Wiring Diagram—5-pin Receiver and Safety Module/Controller or Safety PLC/PES 49
6.5.4 Generic Wiring Diagram—8-pin Receiver and a Smart Device 50
6.5.5 Generic Wiring Diagram—8-pin Receiver and Redundant FSDs 51
6.5.6 Generic Wiring Diagram—8-pin Receiver and IM-T-9A Interface Module 52
7 System Operation 53
7.1 Security Protocol 53
7.2 Status Indicators 53
7.2.1 Emitter 53
7.2.2 Receiver 53
7.2.3 Receiver Status Indicator Operation - Trip Output 53
7.3 Normal Operation 54
7.3.1 System Power-Up 54
7.3.2 Run Mode 54
7.4 Periodic Checkout Requirements 54
8 Checkout Procedures 56
8.1 Schedule of Checkouts 56
8.2 Commissioning Checkout 56
9 Troubleshooting 58
9.1 Lockout Conditions 58
9.2 Recovery Procedures 58
9.2.1 Receiver Error Codes 59
9.2.2 Emitter Error Codes 60
9.3 Electrical and Optical Noise 60
9.3.1 Check for Sources of Electrical Noise 60
9.3.2 Check for Sources of Optical Noise 61
10 Accessories 62
10.1 Cordsets 62
10.1.1 Single-Ended (Machine Interface) Cables 62
10.1.2 Double-Ended Cordsets 63
10.1.3 Splitter Cordsets 65
10.1.4 Bulkhead Connector 66
10.2 AC Interface Boxes 66
10.3 Universal (Input) Safety Modules 66
10.4 Safety Controllers 67
10.5 Muting Module 67
10.6 Interface Modules 67
10.7 Contactors 67
10.8 Optional Mounting Brackets 68
10.8.1 Installing the Side Mount Brackets 69
10.9 Alignment Aids 70
10.10 Snap-On Lens Shields 71
10.11 Tubular Enclosures 71
10.12 EZ-LIGHTS® for EZ-SCREEN® 71
10.13 MSM Series Corner Mirrors 73
10.14 SSM Series Corner Mirrors 74
10.15 MSA Series Stands 75
11 Product Support and Maintenance 77
11.1 Cleaning 77
11.2 Warranty Service 77
11.3 Manufacturing Date 77
11.4 Replacement Parts 77
11.5 Disposal 77
11.6 Contact Us 77
11.7 Banner Engineering Corp Limited Warranty 77
12 Glossary 79

1 About This Document

1.1 Important... Read This Before Proceeding!

It is the responsibility of the machine designer, controls engineer, machine builder, machine operator, and/or maintenance personnel or electrician to apply and maintain this device in full compliance with all applicable regulations and standards. The device can provide the required safeguarding function only if it is properly installed, properly operated, and properly maintained. This manual attempts to provide complete installation, operation, and maintenance instruction. *Reading the manual in its entirety is highly recommended to ensure proper understanding of the operation, installation, and maintenance.* Please direct any questions regarding the application or use of the device to Banner Engineering.

For more information regarding U.S. and international institutions that provide safeguarding application and safeguarding device performance standards, see Standards and Regulations on page 6.

WARNING:
- The user is responsible for following these instructions.
- **Failure to follow any of these responsibilities may potentially create a dangerous condition that could result in serious injury or death.**
- Carefully read, understand, and comply with all instructions for this device.
- Perform a risk assessment that includes the specific machine guarding application. Guidance on a compliant methodology can be found in ISO 12100 or ANSI B11.0.
- Determine what safeguarding devices and methods are appropriate per the results of the risk assessment and implement per all applicable local, state, and national codes and regulations. See ISO 13849-1, ANSI B11.19, and/or other appropriate standards.
- Verify that the entire safeguarding system (including input devices, control systems, and output devices) is properly configured and installed, operational, and working as intended for the application.
- Periodically re-verify, as needed, that the entire safeguarding system is working as intended for the application.

1.2 Use of Warnings and Cautions

The precautions and statements used throughout this document are indicated by alert symbols and must be followed for the safe use of the EZ-SCREEN LS Basic Safety Light Curtain. Failure to follow all precautions and alerts may result in unsafe use or operation. The following signal words and alert symbols are defined as follows:

Signal Word	Definition	Symbol
WARNING:	**Warnings** refer to potentially hazardous situations which, if not avoided, could result in serious injury or death.	
CAUTION:	**Cautions** refer to potentially hazardous situations which, if not avoided, could result in minor or moderate injury.	

These statements are intended to inform the machine designer and manufacturer, the end user, and maintenance personnel, how to avoid misapplication and effectively apply the EZ-SCREEN LS Basic Safety Light Curtain to meet the various safeguarding application requirements. These individuals are responsible to read and abide by these statements.

1.3 EU/UK Declaration of Conformity (DoC)

Banner Engineering Corp. herewith declares that these products are in conformity with the provisions of the listed directives, regulations, and all essential health and safety requirements have been met. For the complete DoC, please go to www.bannerengineering.com.

Product	Directive
EZ-SCREEN LS Basic Safety Light Curtain	EU: 2006/42/EC UK: Machinery (Safety) Regulations 2008

Representative in EU: Spiridon Lachanidis, Managing Director, **Banner Engineering Europe** Park Lane, Culliganlaan 2F bus 3, 1831 Diegem, BELGIUM

Representative in UK: Tony Coghlan, Managing Director, **Turck Banner LTD** Blenheim House, Blenheim Court, Wickford, Essex SS11 8YT, Great Britain

2 Standards and Regulations

The list of standards below is included as a convenience for users of this Banner device. Inclusion of the standards below does not imply that the device complies specifically with any standard, other than those specified in the Specifications section of this manual.

2.1 Applicable U.S. Standards

ANSI B11.0 Safety of Machinery, General Requirements, and Risk Assessment
ANSI B11.1 Mechanical Power Presses
ANSI B11.2 Hydraulic Power Presses
ANSI B11.3 Power Press Brakes
ANSI B11.4 Shears
ANSI B11.5 Iron Workers
ANSI B11.6 Lathes
ANSI B11.7 Cold Headers and Cold Formers
ANSI B11.8 Drilling, Milling, and Boring
ANSI B11.9 Grinding Machines
ANSI B11.10 Metal Sawing Machines
ANSI B11.11 Gear Cutting Machines
ANSI B11.12 Roll Forming and Roll Bending Machines
ANSI B11.13 Single- and Multiple-Spindle Automatic Bar and Chucking Machines
ANSI B11.14 Coil Slitting Machines
ANSI B11.15 Pipe, Tube, and Shape Bending Machines
ANSI B11.16 Metal Powder Compacting Presses
ANSI B11.17 Horizontal Extrusion Presses
ANSI B11.18 Machinery and Machine Systems for the Processing of Coiled Strip, Sheet, and Plate
ANSI B11.19 Performance Criteria for Safeguarding
ANSI B11.20 Manufacturing Systems
ANSI B11.21 Machine Tools Using Lasers
ANSI B11.22 Numerically Controlled Turning Machines
ANSI B11.23 Machining Centers
ANSI B11.24 Transfer Machines
ANSI/RIA R15.06 Safety Requirements for Industrial Robots and Robot Systems
NFPA 79 Electrical Standard for Industrial Machinery
ANSI/PMMI B155.1 Package Machinery and Packaging-Related Converting Machinery — Safety Requirements

2.2 Applicable OSHA Regulations

OSHA Documents listed are part of: Code of Federal Regulations Title 29, Parts 1900 to 1910
OSHA 29 CFR 1910.212 General Requirements for (Guarding of) All Machines
OSHA 29 CFR 1910.147 The Control of Hazardous Energy (lockout/tagout)
OSHA 29 CFR 1910.217 (Guarding of) Mechanical Power Presses

2.3 International/European Standards

EN ISO 12100 Safety of Machinery – General Principles for Design — Risk Assessment and Risk Reduction
ISO 13857 Safety of Machinery – Safety Distances to Prevent Hazard Zones Being Reached
ISO 13850 (EN 418) Emergency Stop Devices, Functional Aspects – Principles for Design
ISO 13851 Two-Hand Control Devices – Principles for Design and Selection
IEC 62061 Functional Safety of Safety-Related Electrical, Electronic and Programmable Control Systems
EN ISO 13849-1 Safety-Related Parts of Control Systems

EN 13855 (EN 999) The Positioning of Protective Equipment in Respect to Approach Speeds of Parts of the Human Body
ISO 14119 (EN 1088) Interlocking Devices Associated with Guards – Principles for Design and Selection
EN 60204-1 Electrical Equipment of Machines Part 1: General Requirements
IEC 61496 Electro-sensitive Protection Equipment
IEC 60529 Degrees of Protection Provided by Enclosures
IEC 60947-1 Low Voltage Switchgear – General Rules
IEC 60947-5-1 Low Voltage Switchgear – Electromechanical Control Circuit Devices
IEC 60947-5-5 Low Voltage Switchgear – Electrical Emergency Stop Device with Mechanical Latching Function
IEC 61508 Functional Safety of Electrical/Electronic/Programmable Electronic Safety-Related Systems
IEC 62046 Safety of Machinery – Applications of Protective Equipment to Detect the Presence of Persons
ISO 3691-4 Industrial Trucks—Safety Requirements and Verification, Part 4 Driverless Industrial trucks and their Systems

3 Product Overview

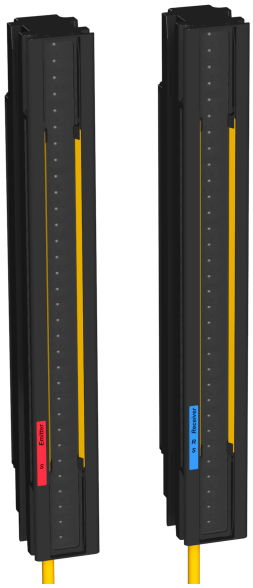

EZ-SCREEN LS Basic Safety Light Curtain

Banner EZ-SCREEN LS Basic is a two-piece (emitter and receiver), redundant, microprocessor-controlled, opposed-mode optoelectronic "light curtain" or "safety light screen". Models are available in 23 mm resolution.

Emitters have a row of synchronized modulated infrared (invisible) light-emitting diodes (LEDs) in a robust, compact metal housing. Receivers have a corresponding row of synchronized photodetectors. The sensing field created by the emitter and receiver is called the "defined area"; its width and height are determined by the length of the sensor pair and the distance between them. The sensing range spans from 100 mm to 8 m (4 in to 26 ft), which decreases if corner mirrors or lens shields are used.

The length of the sensor pair (housing) is dependent on the model, with lengths available from 350 mm to 1820 mm (13.8 in to 71.6 in). The end to end sensing design of the EZ-SCREEN LS Basic, also known as "no blind zone" and "no dead zone," allows mounting with minimal or no gaps in detection when using EZLSA-MBK-12 center-mount or EZLSA-MBK-16 side-mount brackets.

The EZ-SCREEN LS Basic models have trip output (auto power-up and automatic reset). In typical operation, if any part of an operator's body (or any opaque object) of more than a pre-determined cross section is detected, the solid-state output signal switching device (OSSD) safety outputs turn Off. These safety outputs are connected to the guarded machine's final switching devices (FSDs) that control the machine primary control elements (MPCEs), which immediately stop the motion of the guarded machine. When the defined area becomes clear, the OSSD outputs are allowed to turn ON.

EZ-SCREEN LS Basic sensors are extensively FMEA (Failure Mode and Effects Analysis) tested to establish an extremely high degree of confidence that when properly installed, no system component (even if it should ever fail) can cause a failure to danger. Because of the dual scan technology, EZ-SCREEN LS Basic sensors are also highly immune to EMI, RFI, ambient light, weld flash, and strobe light.

Eight-conductor EZ-SCREEN LS Basic systems (receivers with 8-pin pigtail QD or flying leads) do not require an external controller when using the external device monitoring (EDM) function. This function ensures the fault detection capability required by U.S. Control Reliability and ISO 13849-1 Categories 3 or 4 and PL d or e for controlling final switching devices (FSDs) or Machine Primary Control Elements (MPCEs).

When configured with a five-conductor hookup, the EZ-SCREEN LS Basic requires a self-checking safety module, safety controller, or safety PLC/PES that conforms to the level of performance required by the risk assessment. Examples include the UM-FA-9A/-11A safety module, SC10-2roe or XS/SC26-2 safety controller for applications requiring Control Reliability and/or ISO 13849-1 Categories 3 or 4 and PL d or e.

Electrical connections (power, ground, inputs and outputs) are made via unique RD (removable disconnect) cordsets. A "System" as referred to in this manual, is defined as an emitter and its receiver, plus their cabling.

Available features include selectable scan code via hookup, an auxiliary fault output, a recessed exit window, and robust metal housing and end-caps for industry leading durability.

Both emitter and receiver feature 7-segment Diagnostic Displays and individual LEDs to provide continuous indication of operating status, configuration and error conditions. An adhesive Diagnostics label is provided that includes a summary of the operational and error codes. Active Alignment (Segment) Indicators provide beam block information and easier installation. See Status Indicators on page 53 for more information.

3.1 Appropriate Applications and Limitations

WARNING:
- **Read this Section Carefully Before Installing the System**
- **Failure to follow these instructions could result in serious injury or death.**
- If all mounting, installation, interfacing, and checkout procedures are not followed properly, this Banner Engineering device cannot provide the protection for which it was designed.
- The user is responsible for ensuring that all local, state, and national laws, rules, codes, or regulations relating to the installation and use of this control system in any particular application are satisfied. Ensure that all legal requirements have been met and that all technical installation and maintenance instructions contained in this manual are followed.
- The user has the sole responsibility to ensure that this Banner Engineering device is installed and interfaced to the guarded machine by Qualified Persons, in accordance with this manual and applicable safety regulations. A Qualified person is a person who, by possession of a recognized degree or certificate of professional training, or who, by extensive knowledge, training and experience, has successfully demonstrated the ability to solve problems relating to the subject matter and work.

The EZ-SCREEN LS Basic ability to perform its safeguarding function depends upon the appropriateness of the application and upon its proper mechanical and electrical installation and interfacing to the guarded machine. **If all mounting, installation, interfacing, and checkout procedures are not followed properly, the EZ-SCREEN LS Basic cannot provide the protection for which it was designed**.

WARNING:
- **Install System Only on Appropriate Applications**
- **Failure to follow these instructions could result in serious injury or death.**
- Use Banner's EZ-SCREEN LS Basic only on machinery that can be stopped immediately after a stop signal is issued at any point in the machine's stroke or cycle, such as part-revolution clutched machines. Under no circumstances may the EZ-SCREEN LS Basic be used on full-revolution clutched machinery or in unsuitable applications.
- If there is any doubt about whether or not your machinery is compatible with the EZ-SCREEN LS Basic, contact Banner Engineering.

3.1.1 Appropriate Applications

EZ-SCREEN LS Basic is typically used for, but is not limited to, the following applications:
- Automated production equipment
- Robotic work cells
- Molding and power presses
- Assembly and packaging machines
- Lean manufacturing systems

3.1.2 Examples: Inappropriate Applications

Do not use EZ-SCREEN LS Basic in the following applications:
- With any machine that cannot be stopped immediately after a stop signal is issued, such as single-stroke (or full-revolution) clutched machinery
- With any machine with inadequate or inconsistent machine response time and stopping performance
- With any machine that ejects materials or component parts through the defined area
- In any environment that is likely to adversely affect photoelectric sensing efficiency. For example, corrosive chemicals or fluids or unusually severe levels of smoke or dust, if not controlled, may degrade sensing efficiency
- As a tripping device to initiate or reinitiate machine motion (PSDI applications), unless the machine and its control system fully comply with the relevant standard or regulation (see OSHA 29CFR1910.217, NFPA 79, ANSI B11.19, ISO 12100, IEC 60204-1, IEC 61496-1, or other appropriate standard)

If an EZ-SCREEN LS Basic is installed for use as a perimeter guard (where a pass-through hazard may exist, see Reducing or Eliminating Pass-Through Hazards on page 24), the dangerous machine motion can be initiated by normal means only after the safeguarded area is clear of individuals and the safety related part of the control system that is providing the latching function has been manually reset.

3.1.3 Control Reliability: Redundancy and Self-Checking

Redundancy requires that EZ-SCREEN LS Basic circuit components be backed up to the extent that, if the failure of a single component will prevent effective machine stopping action when needed, that component must have a redundant counterpart which will perform the same function. The EZ-SCREEN LS Basic is designed with redundant microprocessors.

Redundancy must be maintained whenever the EZ-SCREEN LS Basic is in operation. Because a redundant system is no longer redundant after a component has failed, EZ-SCREEN LS Basic is designed to monitor itself continuously. A component failure detected by or within the self-checking system causes a stop signal to be sent to the guarded machine and puts the EZ-SCREEN LS Basic into a Lockout condition.

A recovery from this type of Lockout condition requires:

- Replacement of the failed component (to restore redundancy)
- The appropriate reset procedure

The Diagnostic Display is used to diagnose causes of a Lockout condition. See Troubleshooting on page 58.

3.2 Models

An EZ-SCREEN LS Basic Safety Light Curtain “System” refers to a compatible emitter and receiver of equal length and resolution (available in pairs or separately) and their cordsets. Mounting hardware is ordered separately for each emitter and receiver. Special-purpose mounting brackets are also available. Depending on the connection option, interfacing solutions include IM-T-.. modules, redundant positively guided contactors, safety modules/controllers, and muting modules.

The 13 mm (0.5 in) minimum bend radius for all cordset models accommodates low-clearance installations; cords can exit to the left, right, or back of the sensor, when mounting. The pigtail QD option is useful for connection to splitter cables or other QD cordsets.

Figure 1. EZ-SCREEN LS Basic Safety Light Curtain System: Emitter, Receiver, Interconnecting Cordsets

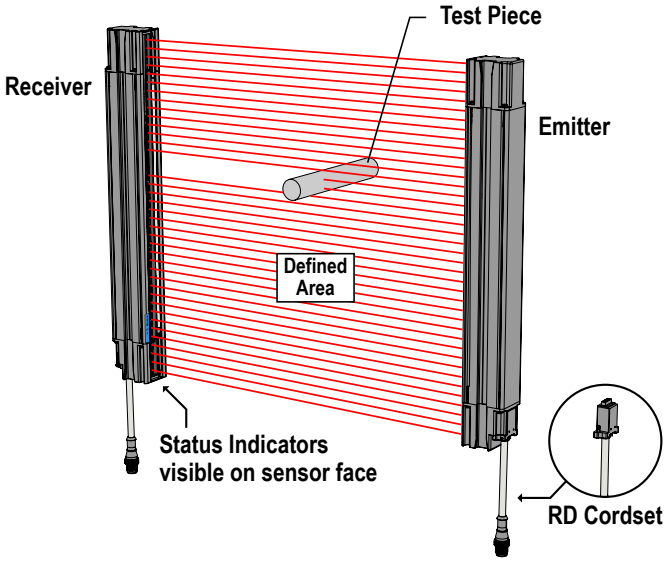

Figure 2. EZ-SCREEN LS Basic Safety Light Curtain cordset options

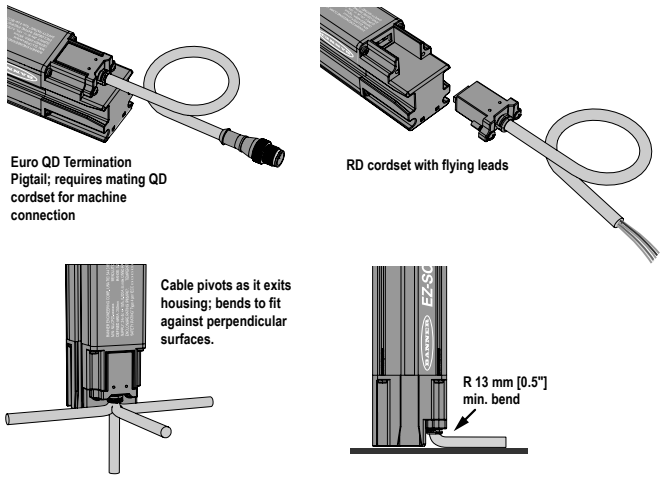

EZ-SCREEN LS Basic Pair model numbers include the following items:

Qty	Description
1	EZ-SCREEN LS Basic Receiver
1	EZ-SCREEN LS Basic Emitter
1	Test Rod STP-19 for 23 mm models
1	Diagnostic Label

Table 1: EZ-SCREEN LS Basic Safety Light Curtain Model Key

Product Family	System Type	Resolution	-	Defined Area	Termination
SLLV	**E** = Emitter only **R** = Receiver only **P** = Pair (Emitter and Receiver)	**23** mm		**350** = 350 mm **420** = 420 mm **630** = 630 mm **910** = 910 mm **1050** = 1050 mm **1190** = 1190 mm **1260** = 1260 mm **1330** = 1330 mm **1540** = 1540 mm **1820** = 1820 mm	**Blank** = no pigtail, RD connection
Example: SLLVP23-350					

To determine the components required for an EZ-SCREEN LS Basic Safety Light Curtain system using the Model Key:

1. Choose an Emitter (E), a Receiver (R), or a Pair (P) and resolution.
2. Choose a defined area.
3. Verify the model number(s) is available and listed in the models tables.
4. See Cordsets on page 62 for mating cordsets. Models with RD connection use either RDLS-8..D, DELS-11..E, DELSE-81D, or DELSE-51D.
5. Choose the mounting brackets. See Optional Mounting Brackets on page 68.
6. See Accessories on page 62 for additional cordsets, interfacing solutions, and accessories.

3.2.1 Models Table

Table 2: EZ-SCREEN LS Basic23 mm Resolution Models

Emitter	Receiver	Pair	Defined Area	Response Time, Tr (ms)	Recovery Time, Typ, OSSDs OFF to ON (ms)	
					Non-sync beam blocked	All beams blocked
SLLVE23-350	SLLVR23-350	SLLVP23-350	350 mm	9.1	36	124
SLLVE23-420	SLLVR23-420	SLLVP23-420	420 mm	9.9	40	135
SLLVE23-630	SLLVR23-630	SLLVP23-630	630 mm	12.5	51	175
SLLVE23-910	SLLVR23-910	SLLVP23-910	910 mm	15.9	67	225
SLLVE23-1050	SLLVR23-1050	SLLVP23-1050	1050 mm	17.5	74	249
SLLVE23-1190	SLLVR23-1190	SLLVP23-1190	1190 mm	19.2	82	274
SLLVE23-1260	SLLVR23-1260	SLLVP23-1260	1260 mm	20.1	86	288
SLLVE23-1330	SLLVR23-1330	SLLVP23-1330	1330 mm	20.9	89	300
SLLVE23-1540	SLLVR23-1540	SLLVP23-1540	1540 mm	23.5	101	339
SLLVE23-1820	SLLVR23-1820	SLLVP23-1820	1820 mm	26.9	116	391

3.3 Operating Features

The Banner EZ-SCREEN LS Basic Safety Light Curtain models described in this manual feature several functions (depending on model).

3.3.1 Trip Output

The System is configured for Trip Output which allows the System to enter Run mode automatically. Other measures must be taken to prevent a pass-through hazard; see Reducing or Eliminating Pass-Through Hazards on page 24 and the warning below for more information.

The OSSD outputs turn ON after power is applied, and the receiver passes its internal self-test/synchronization and recognizes that all beams are clear. The Trip Output also automatically resets after all beams are cleared.

WARNING:

- **Use of automatic (trip) or manual (latch) start/restart**
- Failure to follow these instructions could result in a serious injury or death.
- Applying power to the Banner Engineering device, clearing the defined area, or resetting a latch condition must not initiate dangerous machine motion. Design the machine control circuitry so that one or more initiation devices must be engaged to start the machine (a conscious act), in addition to the Banner Engineering device going into Run mode.

3.3.2 External Device Monitoring (EDM)

The External Device Monitoring (EDM) feature allows the EZ-SCREEN LS Basic to monitor the status of external devices, such as MPCEs. The choices are 1-channel monitoring or no monitoring. EDM is used when the EZ-SCREEN LS Basic OSSD outputs directly control the MPCEs or other external devices.

This feature is only available when an 8-conductor interface is used.

3.3.3 Fault Output

The current sourcing (PNP) solid-state output (70 mA maximum) is used for control functions that are not safety related; a typical use is to signal a lockout (fault) to a programmable logic controller (PLC). Available on both the receiver and emitter, the output provides a fault signal (lockout = On). Interrupting (blocking) the sensing field is not considered a lockout, so the Fault Output does not change state.

This feature is available only when an 8-conductor interface is used.

3.3.4 Scan Code Configuration

Use the scan code to allow operation of multiple pairs of emitters and receivers in close proximity without the effects of cross-talk. The emitter and receiver may be configured to use one of two scan codes (1 or 2); a receiver recognizes light only from an emitter with the same scan code. Set the scan code using the wiring on each sensor (see Scan Code Select on page 45). The scan code is configured at power-up and remains set until the input is changed and power is cycled. Both the emitter and its corresponding receiver must have the same setting.

This feature is only available when an 8-conductor interface is used.

3.3.5 Wiring Options

The Machine Interface connection has several options, including:

- A 300 mm (1 ft) pigtail cable with an 8-pin M12 male quick disconnect (QD) (DELSE-81D)
- A 300 mm (1 ft) pigtail cable with a 5-pin M12 male quick disconnect (QD) (DELSE-51D)
- An 8-wire flying lead RD cordset (RDLS-8..D)

Each connection option is intended for maximum flexibility to solve unique application requirements such as directly connecting the EZ-SCREEN LS Basic to remotely located safety I/O blocks. For interfacing modules or remotely located safety I/O blocks where pin 5 of a 5-pin M12 QD is not earth ground, a 4-pin cordset where pin 5 is not physically present or is not electrically connected can be used (such as MQDEC-406SS double-ended cordset). In such situations, earth ground must be provided via the mounting brackets.

Additionally, an EZ-SCREEN LS Basic emitter can be connected either to its own power supply or to the receiver cable, color-for-color. The color-for-color wiring allows the emitter and receiver positions to be interchanged (swapped) without rewiring.

Figure 3. 300 mm Pigtail with M12 QD

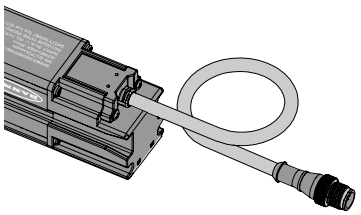

Figure 4. 8-wire Flying Lead Cordset

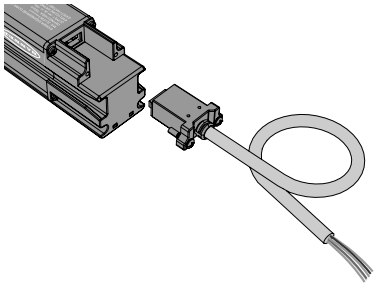

3.3.6 EZ-LIGHT® Indication

For the EZ-SCREEN LS Basic, a CSB-M128..M1281 splitter cable and optional DEE2R-8..D double-ended cables can be used with specific models of EZ-LIGHTs at the machine interface connection. The EZ-LIGHT can be remotely mounted on the machine frame or another convenient mounting surface and provides clear, 360° indication of the EZ-SCREEN LS Basic receiver's OSSD output status.

Figure 5. EZ-SCREEN LS with M18 EZ-LIGHT



3.3.7 Status Indicators

Status indicators on both the emitter and receiver are visible on each sensor's front panel.

Emitter

Bi-color red/green Status indicator—shows whether power is applied, and whether the emitter is in RUN mode (green) or Lockout condition (flashing red) .

1-Digit Diagnostic Display—indicates configuration or specific error conditions.

Figure 6. Status Indicators—Emitter

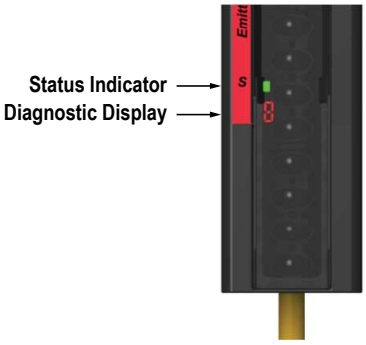

Receiver

Bi-color red/green Status indicator—shows system status:

- outputs are ON or OFF (green ON or red OFF), or
- the System is in Lockout condition (flashing red)

Amber RUN mode indicator—shows system status:

- RUN mode (ON), or
- Lockout (OFF)

1-Digit Diagnostic Display—indicates configuration or specific error conditions, or the total number of blocked beams.

Bi-color red/green Alignment indicators—show status of a group of beams (+/- 35 mm of indicator) along the length of the exit window:

- aligned and clear (green ON), or
- blocked and/or misaligned (red ON),
- lockout (all OFF), or
- Beam 1 (sync) is blocked (Alignment Indicator 1 is red and all others are OFF).

Figure 7. Status Indicators—Receiver

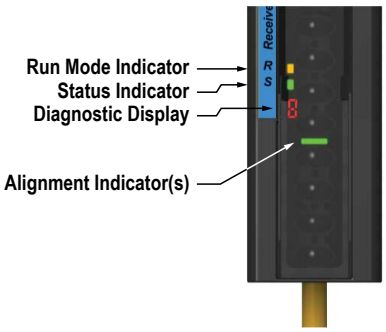

4 Specifications

4.1 General Specifications

Supply Current (mA)

	Emitter		Receiver*	
				Standard
Length	Max**	Typical	Max**	Typical
350	30	25	115	72
420	30	25	117	74
630	30	25	124	80
910	31	26	134	89
1050	31	26	139	93
1190	31	26	144	97
1260	32	26	146	99
1330	32	26	149	101
1540	32	27	156	108
1820	32	27	166	116

* Supply current exclusive of OSSD1 and OSSD2 loads (up to additional 0.5 A each) and Fault Output load (up to 0.070 A).
** Maximum current occurs at a supply voltage of 20 V DC.

Supply Voltage at the Device
24 V DC ±15% (use a SELV-rated power supply according to EN IEC 60950).
The external voltage supply must be capable of buffering brief mains interruptions of 20 ms, as specified in IEC/EN 60204-1.

Residual Ripple
±10% maximum

Short Circuit Protection
All inputs and outputs are protected from short circuits to +24 V DC or DC common

Resolution
23 mm, depending on the model

Effective Aperture Angle (EAA)
Meets Type 4 requirements per IEC 61496-2

Enclosure
Extruded aluminum housing with black anodized finish (previous units had a yellow polyester powder finish) standard and well-sealed, rugged die-cast zinc end caps, acrylic lens cover

Electrical Safety Class
III (per IEC 61140: 1997)

Environmental Rating
IP65/IP67

Operating Conditions
–20 °C to +55 °C (–4 °F to +131°F)
95% maximum relative humidity (non-condensing)

Mounting Hardware
All mounting hardware is ordered separately. Models longer than 910 mm should use an additional center-mount bracket for support. Mounting brackets are 8-gauge cold-rolled steel, black zinc finish.

Cables and Connections
See Cordsets on page 62

Safety Rating
Type 4 per IEC 61496-1, -2
Category 4 PL e per EN ISO13849-1
SIL3 per IEC 61508; SIL CL3 per IEC 62061
PFHd: 1.30×10^{-10}
Proof Test Interval: 20 years

Operating Range
0.1m to 8 m (4 in. to 26.2 ft) — Range decreases with use of mirrors and/or lens shields:
- Lens shields — approx 10% less range per shield
- Glass-surface mirrors — approx 8% less range per mirror

See the specific mirror datasheet for more information.

Shock and Vibration
Components have passed vibration and shock tests according to IEC 61496-1. This includes vibration (10 cycles) of 10-55 Hz at 0.35 mm (0.014 in) single amplitude (0.70 mm peak-to-peak) and shock of 10 g for 16 milliseconds (6,000 cycles).

Certifications

Banner Engineering Europe Park Lane, Culliganlaan 2F bus 3, 1831 Diegem, BELGIUM

Turck Banner LTD Blenheim House, Blenheim Court, Wickford, Essex SS11 8YT, Great Britain

4.2 Receiver Specifications

Response Time

Dependent on the number of sensing beams; for the response time, see Models on page 10

EDM Input (Available with 8-Conductor Models)

+24 V DC signals from external device contacts can be monitored (one-channel or no monitoring) via the EDM terminal in the receiver.
High Signal: 10 to 30 V DC at 30 mA typical
Low Signal: 0 to 3 V DC

Recovery Time

Blocked to Clear (OSSDs turn On): Dependent on the number of beams and whether the first beam (CH 1 synchronization beam) has been blocked. For specific values, see Models on page 10.

Strobe Light Immunity

Totally immune to one Federal Signal Corp. "Fireball" model FB2PST strobe

Scan Code Input (Available with 8-Conductor Models)

High Signal: 10 to 30 V DC at 30 mA typical
Low Signal: 0 to 3 V DC
Scan Code Selection: 8-pin/8-wire connection only (5-pin systems are Scan Code 1)

- Select Scan Code 1 by connecting pin 8 (violet wire) to 0 V DC or leaving it open (not connected)
- Select Scan Code 2 by connecting pin 8 (violet wire) to +24 V DC

Output Signal Switching Devices (OSSDs)

Two redundant solid-state 24 V DC, 0.5 A maximum sourcing OSSD (Output Signal Switching Device) safety outputs (Use optional interface solutions for AC or larger DC loads)
ON-State voltage: > Vin – 1.5 V DC
OFF-State voltage: 0 V DC typical, 1 V DC maximum (no load)
OFF-State, maximum allowed external voltage: 1.5 V DC [1]
Maximum load capacitance: 1.0 µF
Maximum cable resistance to load: 5 ohms per wire
Maximum leakage current: 50 µA (with open 0 V)
OSSD test pulse width: 200 µs typical
OSSD test pulse period: 200 ms typical
Switching current: 0 A minimum; 0.5 A maximum (per OSSD)

Fault Output Switching Capacity (Available with 8-Conductor Models)

Current-sourcing (PNP) solid-state output, 24 V dc at 70 mA maximum

Status Indicators

Amber Run Mode Indicator: indicates the System is ready for operation
Bi-color (red/green) Status indicator: indicates general system and output status
Bi-color (red/green) Alignment Status indicators: indicate condition (clear or blocked beam) of a defined group of beams (±35 mm of indicator)
7-Segment Diagnostic indicator (1 digit): indicates proper operation, scan code, error code, or total number of blocked beams

Ambient Light Immunity

10,000 lux at 5° angle of incidence

4.3 Emitter Specifications

Emitter Elements Wavelength

Infrared LEDs, 850 nm at peak emission

Fault Output Switching Capacity

Current-sourcing (PNP) solid-state output, 24 V dc at 70 mA maximum

Position ID Input (Available with 8-Conductor Models)

Input connected to +24 V dc to identify emitter's position as a stand-alone

Status Indicators

One bi-color (Red/Green) Status Indicator: indicates operating mode, lockout or power Off condition
7-Segment Diagnostic indicator (1 digit): indicates proper operation, scan code, or error code

Scan Code Input (Available with 8-Conductor Models)

High Signal: 10 to 30 V DC at 30 mA typical
Low Signal: 0 to 3 V DC
Scan Code Selection: 8-pin/8-wire connection only (5-pin systems are Scan Code 1)

- Select Scan Code 1 by connecting pin 8 (violet wire) to 0 V dc or leaving it open (not connected)
- Select Scan Code 2 by connecting pin 8 (violet wire) to +24 V dc

[1] The maximum voltage allowed on the OSSDs in the OFF-state without a lockout occurring. This voltage may occur, for example, from the input structure of a safety relay module connected to the EZ-SCREEN LS Basic OSSDs.

4.4 Dimensions

Figure 8. Dimensions shown with the EZLSA-MBK-11 bracket

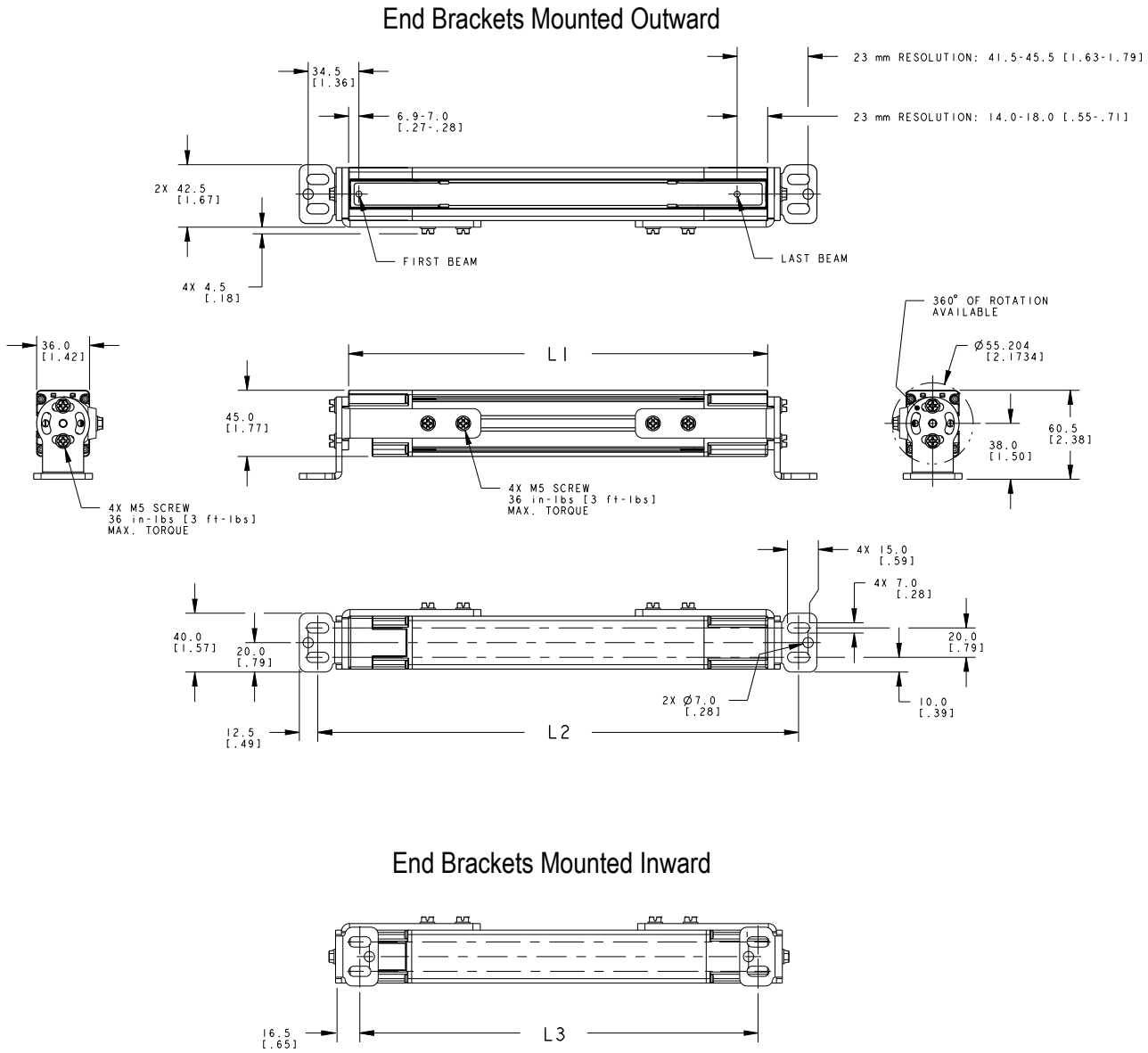

Emitter/Receiver Model	Housing Length (L1)	Hole to Hole Length with Brackets Out (L2) (mm)	Hole to Hole Length with Brackets In (L3) (mm)	Defined Area [2] (mm)
SLL...-350…	355 mm (14.0 in)	397.1	339.1	350
SLL...-420…	425 mm (16.7 in)	466.6	408.6	420
SLL...-630…	634 mm (25.0 in)	676.1	618.1	630
SLL...-910…	914 mm (36.0 in)	955.6	897.6	910

[2] Nominal measurement

Emitter/Receiver Model	Housing Length (L1)	Hole to Hole Length with Brackets Out (L2) (mm)	Hole to Hole Length with Brackets In (L3) (mm)	Defined Area [2] (mm)
SLL...-1050…	1053 mm (41.5 in)	1095.1	1037.1	1050
SLL...-1190…	1193 mm (47.0 in)	1235.1	1177.1	1190
SLL...-1260…	1263 mm (49.7 in)	1304.6	1246.6	1260
SLL..-1330…	1333 mm (52.5 in)	1374.6	1316.6	1330
SLL...-1540…	1542 mm (60.7 in)	1584.1	1526.1	1540
SLL...-1820…	1821 mm (71.7 in)	1863.1	1805.1	1820

4.5 Mounting Dimensions

All measurements are listed in millimeters [inches], unless noted otherwise. See Dimensions on page 18 for EZ-SCREEN LS Basic dimensions with and without brackets installed. See Side Bracket Mounting for additional information about mounting the EZLSA-MBK-16 brackets.

End-Mount Brackets	Dimensions
Figure 9. EZLSA-MBK-11 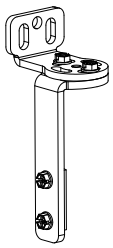	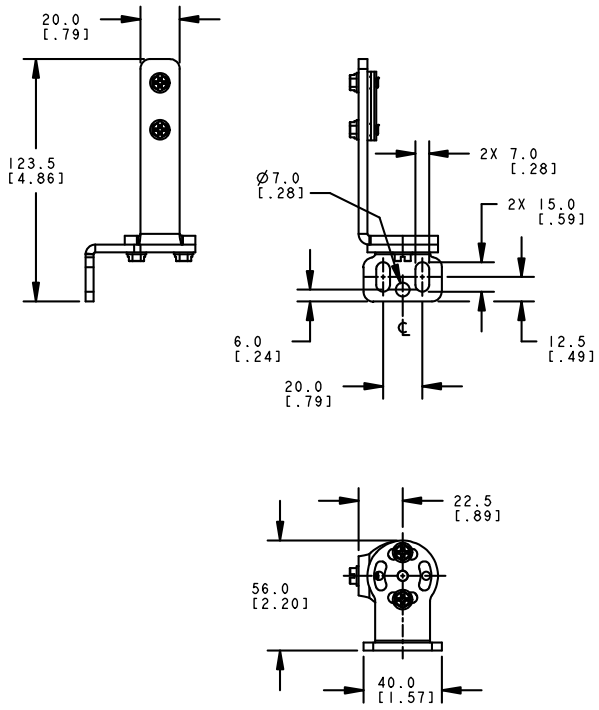

[2] Nominal measurement

Center-Mount Brackets	Dimensions
Figure 10. EZLSA-MBK-12 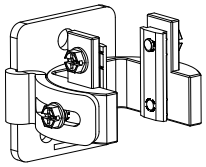	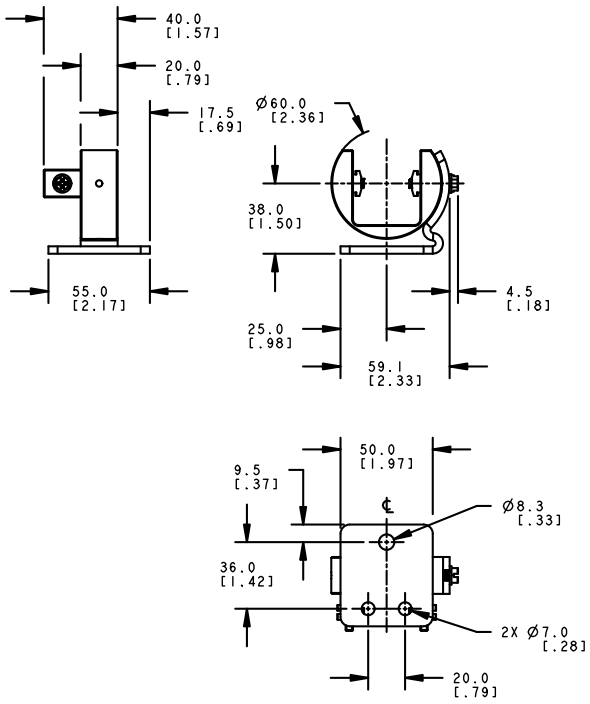

Side-Mount Brackets	Dimensions
Figure 11. EZLSA-MBK-16 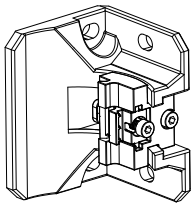	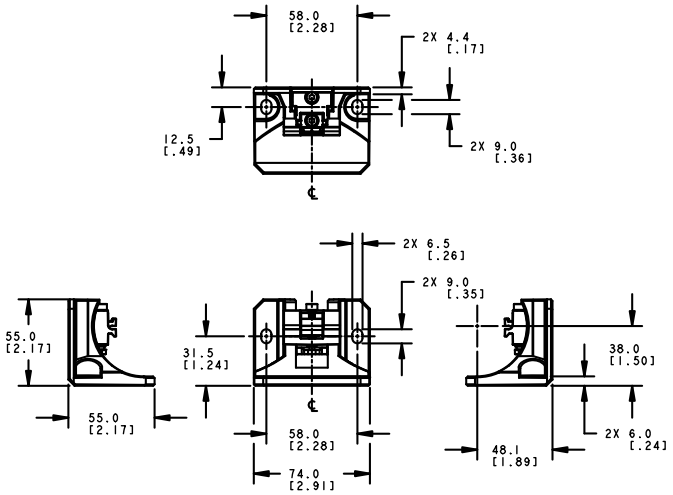

5 Mechanical Installation

The EZ-SCREEN LS Basic system performance as a safety guarding device depends on:

- The suitability of the application
- The proper mechanical and electrical installation and interfacing to the guarded machine

WARNING:

- **Read this Section Carefully Before Installing the System**
- **Failure to follow these instructions could result in serious injury or death.**
- If all mounting, installation, interfacing, and checkout procedures are not followed properly, this Banner Engineering device cannot provide the protection for which it was designed.
- The user is responsible for ensuring that all local, state, and national laws, rules, codes, or regulations relating to the installation and use of this control system in any particular application are satisfied. Ensure that all legal requirements have been met and that all technical installation and maintenance instructions contained in this manual are followed.
- The user has the sole responsibility to ensure that this Banner Engineering device is installed and interfaced to the guarded machine by Qualified Persons, in accordance with this manual and applicable safety regulations. A Qualified person is a person who, by possession of a recognized degree or certificate of professional training, or who, by extensive knowledge, training and experience, has successfully demonstrated the ability to solve problems relating to the subject matter and work.

5.1 Mechanical Installation Considerations

The two primary factors that influence the layout of the EZ-SCREEN LS Basic system mechanical installation are:

- Safety Distance (Minimum Distance) (see Calculating the Safety Distance (Minimum Distance) on page 21)
- Supplemental safeguarding/eliminating pass-through hazards (see Reducing or Eliminating Pass-Through Hazards on page 24)

Other considerations include:

- Emitter and Receiver Orientation (see Emitter and Receiver Orientation on page 29)
- Adjacent Reflective Surfaces (see Adjacent Reflective Surfaces on page 26)
- Use of Corner Mirrors (see Use of Corner Mirrors on page 28)
- Installation of Multiple Systems (see Installation of Multiple Systems on page 30)

WARNING:

- **Position the System Components Carefully**
- Failure to observe this warning could result in serious injury or death.
- Position the system components such that the hazard cannot be accessed by reaching over, under, around, or through the sensing field. Additional and supplemental guarding may be required.

5.1.1 Calculating the Safety Distance (Minimum Distance)

Safety Distance (Ds), also called Minimum Distance (S), is the minimum distance required between the defined area and the closest reachable hazard point. The distance is calculated so that when an object or a person is detected (by blocking a sensing beam), the EZ-SCREEN LS Basic sends a stop signal to the machine, causing it to stop by the time the object or person can reach any machine hazard point.

The distance is calculated differently for U.S. and European installations. Both methods take into account several factors, including a calculated human speed, the total system stopping time (which itself has several components), and the depth penetration factor. After the distance has been determined, record the calculated distance on the Daily Checkout Card.

WARNING:

- **Calculate the Safety Distance (Minimum Distance)**
- Failure to establish and maintain the safety distance (minimum distance) could result in serious injury or death.
- Mount the components at a distance from the nearest hazard such that an individual cannot reach the hazard before cessation of the hazardous motion or situation. Calculate this distance using the supplied formulas, as described by ANSI B11.19 and ISO 13855. Mount the components more than 100 mm (4 in) away from the hazard, regardless of the calculated value.

Figure 12. Safety distance (minimum distance) and hard (fixed) guarding

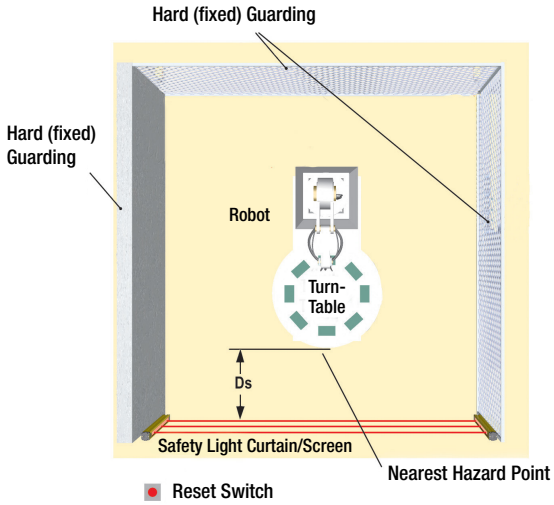

5.1.2 Formula and Examples

Notes:

1. The OSHA-recommended hand speed constant **K** has been determined by various studies and, although these studies indicate speeds of 1600 mm/sec. (63 in/sec.) to more than 2500 mm/sec. (100 in/sec.), they are not conclusive determinations. Consider all factors, including the physical ability of the operator, when determining the value of **K** to be used.
2. The recommended hand speed constant **K**, derived from data on approach speeds of the body or parts of the body as stated in ISO 13855.
3. **Ts** is usually measured by a stop-time measuring device. If the machine manufacturer's specified stop time is used, at least 20% should be added to allow for possible clutch/ brake system deterioration. This measurement must take into account the slower of the two MPCE channels, and the response time of all devices or controls that react to stop the machine.

WARNING:

- **Stop time (Ts) must include the response time of all devices or controls that react to stop the machine**
- If all devices are not included, the calculated safety distance (Ds or S) will be too short, which can lead to serious injury or death.
- Include the stop time of all relevant devices and controls in your calculations.
- If required, each of the two machine primary control elements (MPCE1 and MPCE2) must be capable of immediately stopping the dangerous machine motion, regardless of the state of the other. These two channels of machine control need not be identical, but the stop time performance of the machine (Ts, used to calculate the safety distance) must take into account the slower of the two channels.

Calculations for US Applications

The Safety (Separation) Distance formula for U.S. applications:

```
Ds = K × (Ts + Tr) + Dpf
```

Ds

the Safety Distance, in inches

K

1600 mm per second (or 63 in per second), the OSHA 29CFR1910.217, and ANSI B11.19 recommended hand-speed constant (see Note 1 below)

Ts

the overall stop time of the machine (in seconds) from the initial stop signal to the final ceasing of all motion, including stop times of all relevant control elements (for example, IM-T-.. Interface Modules) and measured at maximum machine velocity (see Note 3 below)

Tr

the maximum response time, in seconds, of the EZ-SCREEN LS Basic emitter/receiver pair (depending on model)

Dpf

the added distance due to the depth penetration factor as prescribed in OSHA 29CFR1910.217, and ANSI B11.19 for U.S. applications. See Depth Penetration Factor (Dpf) table below or calculate using the formula (in mm): Dpf = 3.4 × (S - 7) where S is the resolution of the light curtain (for S ≤ 63 mm).

Table 3: Depth Penetration Factor (Dpf)

23 mm System
54 mm (2.14 in)

US Application example: Model SLLVP23-630
K = 63 in per second
Ts = 0.32 (0.250 seconds is specified by the machine manufacturer; plus 20% safety factor; plus 20 ms interface module IM-T-9A response)
Tr = 0.0125 second (the specified SLLVP23-630 response time)
Dpf = 2.14 in (for 23 mm resolution)
Ds = 63 × (0.32 + 0.0125) + 2.14 = 23.1 in
Mount the EZ-SCREEN LS Basic emitter and receiver so that no part of the defined area is closer than 23.1 inches to the closest reachable hazard point on the guarded machine.

Calculations for European Applications

The Minimum Distance formula for European applications:

```
S = (K × T) + C
```

S

the Minimum Distance, in mm, from danger zone to light screen center line

K

hand-speed constant (see Note 2 below); **2000 mm/s** (for Minimum Distances ≤ 500 mm) **1600 mm/s** (for Minimum Distances > 500 mm)

T

the overall machine stopping response time (in seconds), from the physical initiation of the safety device and the machine coming to a stop (or the hazard removed). This can be broken down into two parts: **Ts** and **Tr** where **T** = **Ts** + **Tr**

C

the additional distance, in mm, based on intrusion of a hand or object towards the danger zone prior to actuation of a safety device. Calculate using the formula (in mm):

```
C = 8 × (d – 14)
```

where d is the resolution of the light curtain (for d ≤ 40 mm).

Table 4: Intrusion Factor (C)

23 mm System
72 mm (2.8 in)

European Application example: Model SLLVP23-630
K = 1600 mm per second
T = 0.3325 (0.250 seconds is specified by the machine manufacturer; plus 20% safety factor; plus 20 ms interface module IM-T-9A response), plus 0.0125 seconds (the specified SLLVP23-630 response time)
C = 8 × (23 - 14) = 72 mm (for 23 mm resolution)

European Application example: Model SLLVP23-630
S = (1600 × 0.3325) + 72 = 604 mm
Mount the EZ-SCREEN LS Basic emitter and receiver so that no part of the defined area will be closer than 604 mm to the closest reachable hazard point on the guarded machine.

5.1.3 Reducing or Eliminating Pass-Through Hazards

A *pass-through* hazard is associated with applications where personnel may pass through a safeguard, such as the EZ-SCREEN LS Basic Safety Light Curtain (which issues a stop command to remove the hazard), and then continues into the guarded area. This is common in access and perimeter guarding applications. Subsequently, their presence is no longer detected, and the related danger becomes the unexpected start or restart of the machine while personnel are within the guarded area.

A pass-through hazard typically results from large safety distances calculated from long stopping times, large minimum object sensitivities, reach-over, reach-through, or other installation considerations. A pass-through hazard can be generated with as little as 75 mm (3 in) between the sensing field and the machine frame or hard (fixed) guarding.

Eliminate or reduce pass-through hazards whenever possible. While it is recommended to eliminate the pass-through hazard altogether, this may not be possible due to machine layout, machine capabilities, or other application considerations.

One solution is to ensure that personnel are continually sensed while within the hazardous area. This can be accomplished by using supplemental safeguarding, such as described by the safety requirements in ANSI B11.19 or other appropriate standards.

An alternative method is to ensure that once the safeguarding device is tripped it will latch and will require a deliberate manual action to reset. This method of safeguarding relies upon the location of the reset switch as well as safe work practices and procedures to prevent an unexpected start or restart of the guarded machine.

WARNING: Use of the Banner device for Access or Perimeter Guarding— If a Banner device is installed in an application that results in a pass-through hazard (for example, perimeter guarding), either the Banner device or the Machine Primary Control Elements (MPCEs) of the guarded machine must cause a Latched response following an interruption of the defined area. The reset of this Latched condition may only be achieved by actuating a reset switch that is separate from the normal means of machine cycle initiation.

WARNING:

- **Perimeter guarding applications**
- Failure to observe this warning could result in serious injury or death.
- Use lockout/tagout procedures per ANSI Z244.1, or use additional safeguarding as described by ANSI B11.19 safety requirements or other applicable standards if a passthrough hazard cannot be eliminated or reduced to an acceptable level of risk.

5.1.4 Supplemental Safeguarding

As described in Calculating the Safety Distance (Minimum Distance) on page 21, properly position the EZ-SCREEN LS Basic such that an individual cannot reach through the defined area and access the hazard point before the machine has stopped.

Additionally, the hazard cannot be accessible by reaching around, under, or over the defined area. To accomplish this, supplemental guarding (mechanical barriers, such as screens or bars), as described by ANSI B11.19 safety requirements or other appropriate standards, must be installed. Access will then be possible only through the defined area of the EZ-SCREEN LS Basic System or through other safeguarding that prevents access to the hazard (see Figure 13 on page 25).

The mechanical barriers used for this purpose are typically called "hard (fixed) guarding"; there must be no gaps between the hard (fixed) guarding and the defined area. Any openings in the hard (fixed) guarding must comply with the safe opening requirements of ANSI B11.19 or other appropriate standard.

Figure 13. An example of supplemental safeguarding

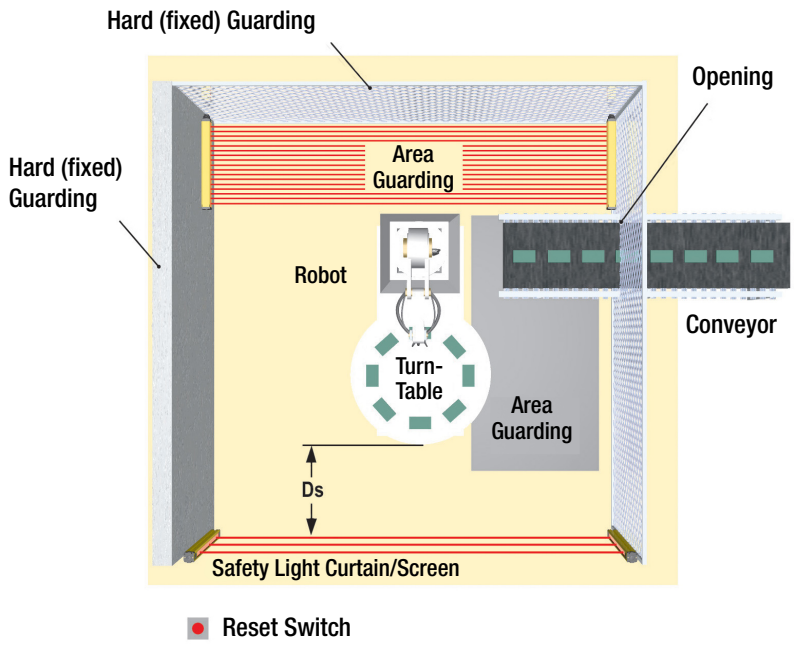

Figure 13 on page 25 shows an example of supplemental safeguarding inside a robotic work cell. The EZ-SCREEN LS Basic, in conjunction with the hard (fixed) guarding, is the primary safeguard. Supplemental safeguarding (such as a horizontal-mounted safety light screen as an area guard) is required in areas that cannot be viewed from the reset switch (for example, behind the robot and the conveyor). Additional supplemental safeguarding may be required to prevent clearance or trapping hazards (for example, a safety mat as an area guard between the robot, the turntable, and the conveyor).

WARNING:

- **The hazard must be accessible only through the sensing field**
- Incorrect system installation could result in serious injury or death.
- The installation of the EZ-SCREEN LS Basic must prevent any individual from reaching around, under, over or through the defined area and into the hazard without being detected.
- See OSHA CFR 1910.217, ANSI B11.19, and/or ISO 14119, ISO 14120 and ISO 13857 for information on determining safety distances and safe opening sizes for your guarding device. Mechanical barriers (for example, hard (fixed) guarding) or supplemental safeguarding might be required to comply with these requirements.

5.1.5 Reset Switch Location

The EZ-SCREEN LS Basic has a trip output (auto power-up and automatic reset) that turns the OSSD outputs ON when the defined area is unobstructed (clear). Per application requirements, a latch response requiring a manual reset to a power-up condition or after an interruption has cleared the defined area might be required. The latch function can be provided by interfacing the EZ-SCREEN LS Basic OSSD outputs to the machine's safety-related control system, a safety controller (such as SC10-2roe or XS/SC26-2), or safety module (such as the UM-FA-9A/11A).

The system or device providing the latch/reset function must conform to the level of performance required by the risk assessment. In applications requiring Control Reliability and/or ISO 13849-1 Categories 3 or 4 and PL d or e, it is recommended that a monitored manual reset (for example, open-closed-open action), such that a shorted or tied-down button cannot cause a reset be used.

The reset switch must be mounted at a location that complies with the warning and guidelines below. If any hazardous areas are not in view from the switch location, additional means of safeguarding must be provided. The switch should be protected from accidental or unintended actuation (for example, through the use of rings or guards).

A key-actuated reset switch provides some operator or supervisory control, as the key can be removed from the switch and taken into the guarded area. However, this does not prevent unauthorized or inadvertent resets due to spare keys in the possession of others, or additional personnel entering the guarded area unnoticed. When considering where to locate the reset switch, follow the guidelines below.

WARNING:
- **Install reset switches properly**
- Failure to properly install reset switches could result in serious injury or death.
- Install reset switches so that they are accessible only from outside, and in full view of, the safeguarded space. Reset switches cannot be accessible from within the safeguarded space. Protect reset switches against unauthorized or inadvertent operation (for example, through the use of rings or guards). If there are any hazardous areas that are not visible from the reset switches, provide additional safeguarding.

All reset switches must be:
- Outside the guarded area
- Located to allow the switch operator a full, unobstructed, view of the entire guarded area while the reset is performed
- Out of reach from within the guarded area
- Protected against unauthorized or inadvertent operation (such as through the use of rings or guards).

Important: Resetting a safeguard must not initiate hazardous motion. Safe work procedures require a start-up procedure to be followed and the individual performing the reset to verify that the entire hazardous area is clear of all personnel before each reset of the safeguard is performed. If any area cannot be observed from the reset switch location, additional supplemental safeguarding must be used: at a minimum, visual and audible warnings of machine start-up.

5.1.6 Adjacent Reflective Surfaces

WARNING:
- **Do not install the system near reflective surfaces**
- Reflective surfaces could reflect the sensing beam(s) around an object or person within the defined area, preventing detection by the system. Failure to prevent reflection problems results in incomplete guarding and an optical short circuit that could result in serious injury or death.
- Do not locate the defined area near a reflective surface. Perform the trip test, as described in the product documentation, to detect such reflection(s).

A reflective surface located adjacent to the defined area may deflect one or more beams around an object in the defined area. In the worst case, an optical short circuit may occur, allowing an object to pass undetected through the defined area.

This reflective surface may result from shiny surfaces or glossy paint on the machine, the workpiece, the work surface, the floor, or the walls. Beams deflected by reflective surfaces are discovered by performing the trip test and the periodic checkout procedures. To eliminate problem reflections:
- If possible, relocate the sensors to move the beams away from the reflective surface(s), being careful to maintain adequate separation distance
- Otherwise, if possible, paint, mask, or roughen the shiny surface to reduce its reflectivity
- Where these are not possible (as with a shiny workpiece or machine frame), determine the worst-case resolution resulting from the optical short circuit and use the corresponding depth penetration factor (Dpf or C) in the Safety Distance (Minimum Distance) formula; or mount the sensors in such a way that the receiver's field of view and/or the emitter's spread of light are restricted from the reflective surface
- Repeat the trip test (see Perform a Trip Test on page 40) to verify these changes have eliminated the problem reflection(s). If the workpiece is especially reflective and comes close to the defined area, perform the trip test with the workpiece in place

Figure 14. Adjacent Reflective Surfaces

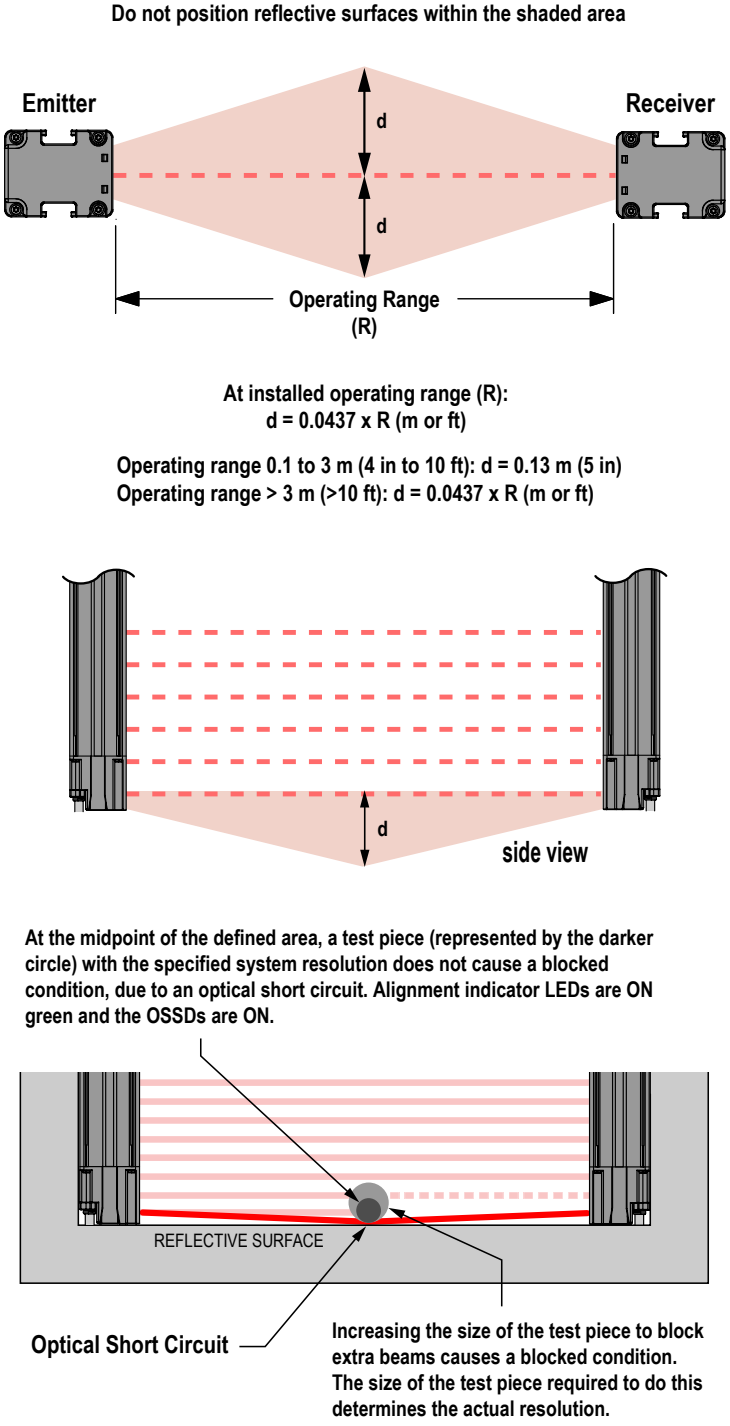

For 0.1 m to 3 m (4 in to 10 ft) Operating range: d = 0.13 m (5 in)

For Operating range > 3 m (> 10 ft): d = 0.0437 × R (m or ft)

At the midpoint of the defined area, a test piece (represented by the darker circle) with the specified system resolution does not cause a blocked condition due to an optical short circuit. Green Alignment indicator lights are On and the OSSDs are On. Increasing the size of the test piece to block additional beams causes a blocked condition. The size of the test piece required to do this determines the actual resolution. Use the table below to calculate Dpf or Factor "C" when a shiny surface causes an optical short circuit.

Test Piece Model	Resolution	Depth Penetration Factor for U.S. Applications	Factor "C" for European Applications
STP-13	14 mm	24 mm (1 in)	0 mm
STP-2	19 mm	41 mm (1.6 in)	40 mm (1.6 in)
STP-16	25 mm	61 mm (2.5 in)	88 mm (3.5 in)
STP-14	30 mm	78 mm (3 in)	128 mm (5 in)
STP-4	32 mm	85 mm (3.3 in)	144 mm (5.7 in)
STP-17	34 mm	92 mm (3.6 in)	160 mm (6.3 in)
STP-1	38 mm	106 mm (4.2 in)	192 mm (7.6 in)
STP-3	45 mm	129 mm (5 in)	850 mm (33.5 in)
STP-8	51 mm	150 mm (5.9 in)	850 mm (33.5 in)
STP-5	58 mm	173 mm (6.8 in)	850 mm (33.5 in)
STP-15	60 mm	180 mm (7 in)	850 mm (33.5 in)
STP-12	62 mm	187 mm (7.4 in)	850 mm (33.5 in)

5.1.7 Use of Corner Mirrors

EZ-SCREEN LS Basic may be used with one or more corner mirrors. Mirrors are not allowed for applications that would allow undetected personnel access into the safeguarded area. The use of glass-surface corner mirrors reduces the maximum specified emitter/receiver separation by approximately 8 percent per mirror, as follows:

Light Screen Maximum Range					
Light Screen Series	**0 Mirrors**	**1 Mirror**	**2 Mirrors**	**3 Mirrors**	**4 Mirrors**
14 mm EZ-SCREEN® (SLS)	6 m (20 ft)	5.6 m (18.4 ft)	5.2 m (17.0 ft)	4.8 m (15.7 ft)	4.4 m (14.5 ft)
30 mm EZ-SCREEN® (SLS)	18 m (60 ft)	16.8 m (55 ft)	15.5 m (51 ft)	14.3 m (47 ft)	13.1 m (43 ft)
EZ-SCREEN® LP (SLP)	7 m (23 ft)	6.5 m (21.2 ft)	6.0 m (19.5 ft)	5.5 m (18.0 ft)	5.1 m (16.6 ft)
EZ-SCREEN® LP Basic (SLPVA)	4 m (13 ft)	3.7 m (12.1 ft)	3.4 m (11.2 ft)	3.1 ft m (10.3 ft)	2.8 m (9.2 ft)
EZ-SCREEN® LS (SLL)	12 m (39 ft)	11 m (36 ft)	10.1 m (33 ft)	9.3 m (30.5 ft)	8.6 m (28 ft)
EZ-SCREEN® LS Basic (SLLV)	8 m (26.2 ft)	7.4 m (24.3 ft)	6.8 m (22.3 ft)	6.2 m (20.3 ft)	5.7 m (18.7 ft)
EZ-SCREEN® Type 2 (LS2)	15 m (50 ft)	13.8 m (45 ft)	12.7 m (42 ft)	11.7 m (38 ft)	10.8 m (35 ft)

See the specific mirror datasheet or www.bannerengineering.com for more information.

If mirrors are used, the difference between the angle of incidence from the emitter to the mirror and from the mirror to the receiver must be between 45° and 120° (see Figure 15 on page 29). If placed at a sharper angle, an object in the light screen may deflect beam(s) to the receiver, preventing the object from being detected, also know as false proxing. Angles greater than 120° result in difficult alignment and possible optical short circuits.

WARNING:
- **Retroreflective Mode Installation**
- Failure to follow these instructions may create unreliable sensing and may result in serious injury or death.
- Do not install emitters and receivers in retroreflective mode with less than a 45° angle of incidence. Install emitters and receivers at an appropriate angle.

Figure 15. Using EZ-SCREEN LS Basic sensors in a retroreflective mode

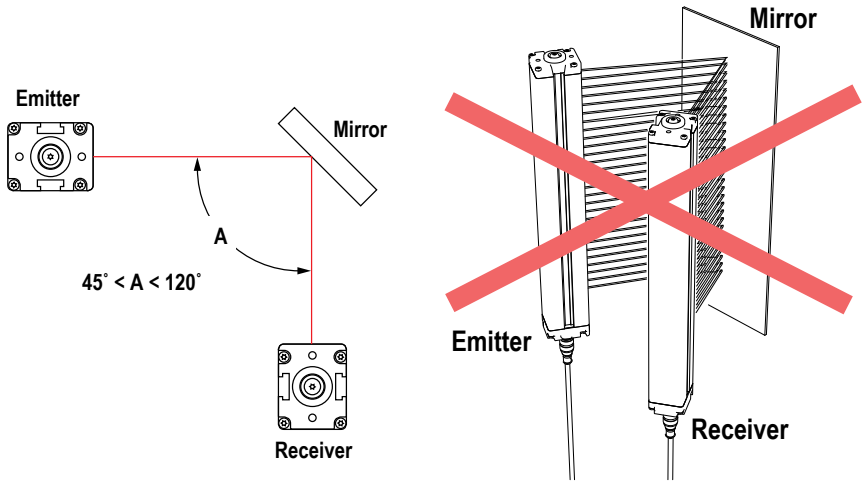

5.1.8 Emitter and Receiver Orientation

The emitter and receiver must be mounted parallel to each other and aligned in a common plane, with both machine interface cable ends pointing in the same direction.

Never mount the emitter with its machine interface cable end oriented in the opposite direction of the cable end of the receiver. If this occurs, voids in the light screen may allow objects or personnel to pass through the defined area undetected.

The emitter and receiver may be oriented in a vertical or horizontal plane, or at any angle between horizontal and vertical, as long as they are parallel to each other and their cable ends point in the same direction. Verify that the light screen completely covers all access to the hazard point that is not already protected by hard (fixed) guarding or other supplemental guarding.

WARNING:

- **Properly install system components**
- Incorrectly orienting the system components impairs the performance of the system and results in incomplete guarding, which can result in serious injury or death.
- Install the system components with their corresponding cable ends pointing in the same direction.

Figure 16. Examples of Correct Emitter/Receiver Orientation

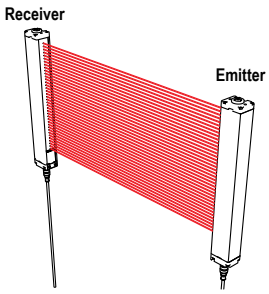

Both cable ends down

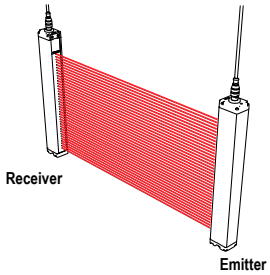

Both cable ends up

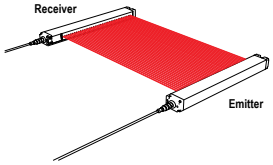

Orientation parallel to floor with both cable ends pointing in the same direction

Figure 17. Examples of Incorrect Emitter/Receiver Orientation

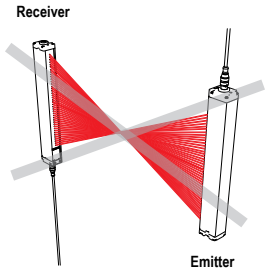

Cable ends point in opposite directions

Problem: Voids in defined area

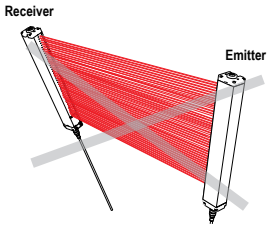

Emitter and receiver not parallel to each other

Problem: Reduced excess gain

5.1.9 Installation of Multiple Systems

Whenever two or more EZ-SCREEN LS Basic emitter and receiver pairs are adjacent to one another, optical crosstalk may take place between the systems. To minimize optical crosstalk, alternate the positions of the emitters and receivers or alternate Scan Codes.

When three or more systems are installed in the same plane (as shown), optical crosstalk may occur between sensor pairs whose emitter and receiver lenses are oriented in the same direction. In this situation, eliminate optical crosstalk by mounting these sensor pairs exactly in line with each other within one plane or by adding a mechanical barrier between the pairs.

To further aid in avoiding crosstalk, the sensors feature two selectable scan codes. A receiver set to one scan code will not respond to an emitter set to another code.

Figure 18. Two systems installed in a horizontal plane

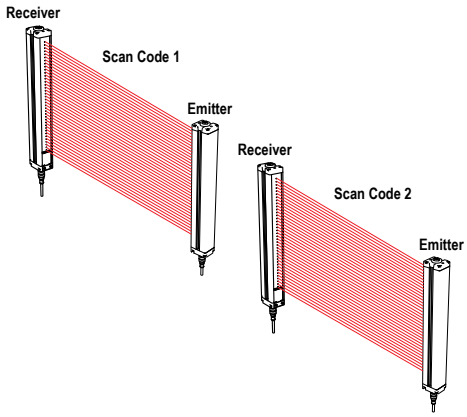

Figure 19. Two or three systems stacked (or alternate receiver/emitter positions)

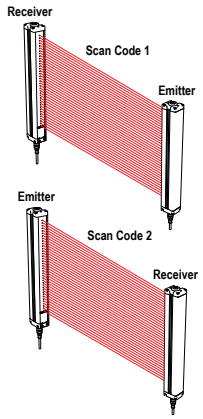

Figure 20. Two systems installed at right angles

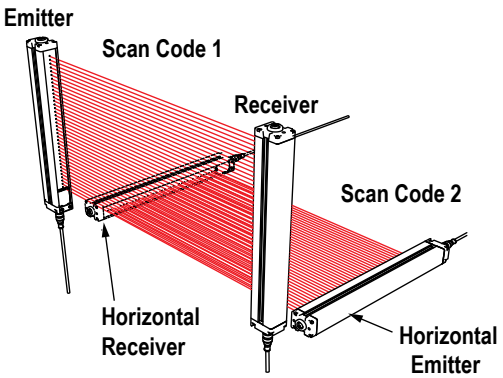

Figure 21. Multiple systems installed in a line

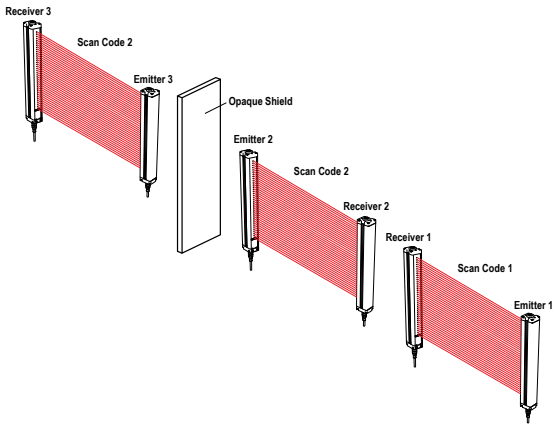

WARNING:
- **Properly connect multiple pairs of sensors**
- Connecting multiple output signal switching devices (OSSD) safety outputs to one interface module or otherwise parallel OSSD outputs can result in serious bodily injury or death, and is prohibited.
- Do not connect multiple pairs of sensors to a single device.

WARNING:
- **Use a scan code**
- If you do not use a scan code, a receiver can synchronize to the signal from the wrong emitter, reducing the safety function of the light curtain and creating an unsafe condition that could result in serious injury or death.
- Configure adjacent systems to use different scan codes (for example, set one system to use scan code 1 and the other system to use scan code 2). Perform a trip test to confirm the light curtain function.

5.2 Mounting System Components

5.2.1 Mounting Hardware

After addressing the mechanical layout considerations, mount the sensors and route the cables. Emitter/receiver pairs can be spaced from 0.1 m (4 in) to 8 m (26.2 ft) apart. This distance is reduced if corner mirrors are used.

Optional **EZLSA-MBK-11** end-mount brackets allow ±23° rotation, can be mounted with flange out or flange in, and in 90° increments. Optional **EZLSA-MBK-12** center-mount brackets allow 30° rotation in one direction and 15° in the other (see Mounting the End-Mount Brackets on page 32 and Mounting the Center- and Side-Mount Brackets on page 33). **Center- and side-mount brackets allow "no blind zone" mounting with minimal or no "gaps" in detection.**

EZLSA-MBK-12 or **EZLSA-MBK-16** (EZLSA-MBK-16 Side-Mount Bracket on page 33) side-mount bracket must be used with longer sensors if they are subject to shock or vibration. In such situations, the sensors are designed to be mounted with up to 910 mm unsupported distance (between brackets).

5.2.2 Mounting the End-Mount Brackets

Figure 22. End-Mount Brackets

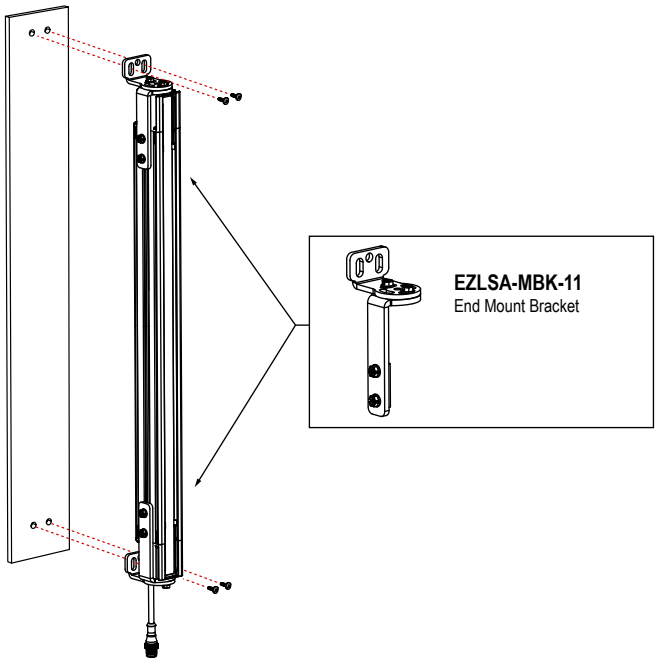

- See Sensor Mounting and Mechanical Alignment on page 34 for additional mounting recommendations.
- The machine interface connector ends of both sensors must point in the same direction.
- Two brackets are supplied with each EZLSA-MBK-11 kit. Additional EZLSA-MBK-12 center-mount bracket(s) may be required (see Mounting the Center- and Side-Mount Brackets on page 33).
- Loosely mount the brackets to the desired surface using the bolts and nuts supplied with the bracket kit, or user-supplied hardware. (Use the M5 hardware to mount the brackets to the light curtain; use the M6 hardware to mount the brackets to the machine.)
- Brackets are designed to mount directly to MSA Series stands using the hardware supplied with the stands.
- Brackets may face in (shown on bottom) or out (shown on top), as desired.
- See Optional Mounting Brackets on page 68 for mounting bracket dimensions.

1. From a common point of reference (ensuring the calculated minimum safety distance), measure to position the emitter and receiver in the same plane, with their midpoints directly opposite each other, and locate and drill mounting holes if necessary.
2. Slide the end-mount bracket onto the side mounting channels and tighten the channel screws.
3. Position the emitter and receiver, and attach the flange to the mounting holes.
4. Verify that the sensor windows directly face each other by rotating the sensor(s), then tighten the bracket screws.
5. Measure from a reference plane, for example, a level building floor, to the same point(s) on the emitter and receiver to verify their mechanical alignment. Use a carpenter's level, a plumb bob, or the optional LAT-1 Laser Alignment Tool (see Alignment Aids on page 70) or check the diagonal distances between the sensors, to achieve mechanical alignment. See Sensor Mounting and Mechanical Alignment on page 34.
6. Temporarily tighten all fasteners that allow for adjustment. Final alignment procedures are explained in Initial Checkout Procedure on page 37.

5.2.3 Mounting the Center- and Side-Mount Brackets

Figure 23. Mounting the center- and side-mount brackets

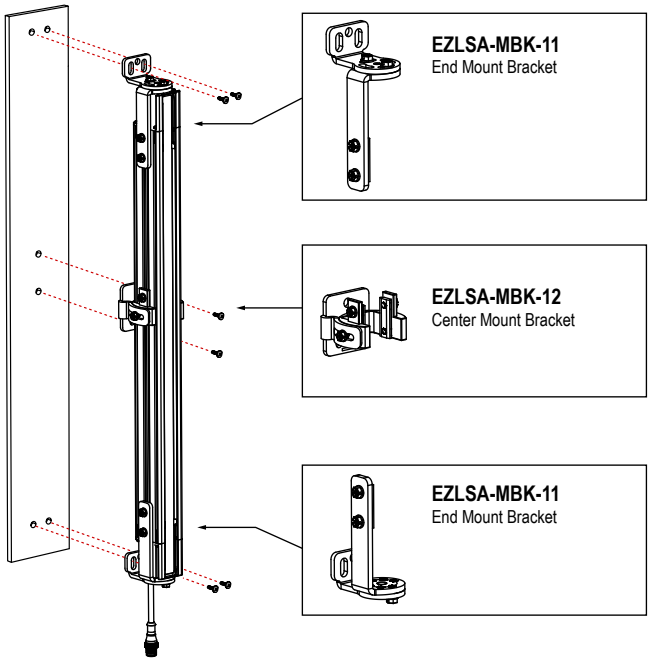

- See Sensor Mounting and Mechanical Alignment on page 34 for additional mounting recommendations.
- The machine interface connector ends of both sensors must point in the same direction.
- The sensors are designed to be mounted with up to 910 mm of unsupported distance between brackets when they are subject to shock or vibration.
- Loosely mount the brackets to the desired surface using the supplied M5 bolts and nuts, or user-supplied hardware.
- A simple "L" mounting bracket can be created by dis-assembling the EZLSA-MBK-11 and only using the mounting flange.
- See Optional Mounting Brackets on page 68 for mounting bracket dimensions.

1. From a common point of reference (ensuring the calculated minimum safety distance), measure to locate the emitter and receiver in the same plane, with their midpoints directly opposite each other, and locate and drill mounting holes if necessary.
2. Attach the mounting flange of the EZLSA-MBK-12 to the mounting holes (back-mount only).
3. Remove the channel nuts from the EZLSA-MBK-12 clamp and slide them into the side mounting channel. A small piece of adhesive tape can be use to temporarily location the nuts within the channel.
4. Position the emitter and receiver and re-assemble the clamp to the channel nuts. Tighten when the sensor is properly located.
5. Rotate sensor(s) so that the windows directly face each other. Tighten the screw.
6. Measure from a reference plane, for example, a level building floor, to the same point(s) on the emitter and receiver to verify their mechanical alignment. Use a carpenter’s level, a plumb bob, or the optional LAT-1 Laser Alignment Tool (see Alignment Aids on page 70) or check the diagonal distances between the sensors, to achieve mechanical alignment.
7. Temporarily tighten all fasteners that allow for adjustment. Final alignment procedures are explained in Initial Checkout Procedure on page 37.

5.2.4 EZLSA-MBK-16 Side-Mount Bracket

The EZLSA-MBK-16 provides a mounting option that is adjustable (lateral and +15/-20° rotational) from the face of the sensor and allows "no blind zone" mounting with minimal or no "gaps" in detection. The bracket can be mounted to a surface on the back or the side of the sensor (not typically to be used in conjugation with EZLSA-MBK-11 end-mount bracket).

Figure 24. Side-Mount Bracket

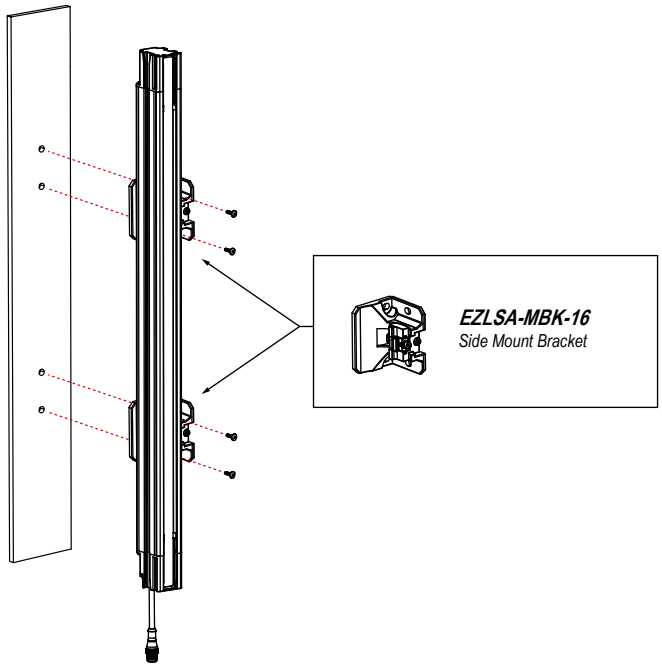

- See Mounting the Center- and Side-Mount Brackets on page 33 for the general mounting procedure.
- See Sensor Mounting and Mechanical Alignment on page 34 for additional mounting recommendations.
- The machine interface connector ends of both sensors must point in the same direction.
- The sensors are designed to be mounted with up to 910 mm of unsupported distance between brackets when they are subject to shock or vibration.
- See Optional Mounting Brackets on page 68 for mounting bracket dimensions and the installation guide.

5.2.5 Sensor Mounting and Mechanical Alignment

Verify that:

- The emitter and receiver are directly opposite each other
- Nothing is interrupting the defined area
- The defined area is the same distance from a common reference plane for each sensor
- The emitter and receiver are in the same plane and are level/plumb and square to each other (vertical, horizontal, or inclined at the same angle, and not tilted front-to-back or side-to-side)

Figure 25. Incorrect Sensor Alignment

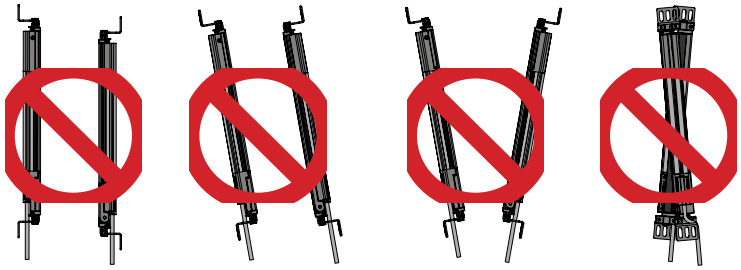

Angled or Horizontal Installations – verify that:

- Distance X at the emitter and receiver are equal
- Distance Y at the emitter and receiver are equal
- Distance Z at the emitter and receiver are equal from parallel surfaces
- Vertical face (the window) is level/plumb
- Defined area is square. Check diagonal measurements if possible. See Vertical Installations.

Figure 26. For angled or horizontal installations

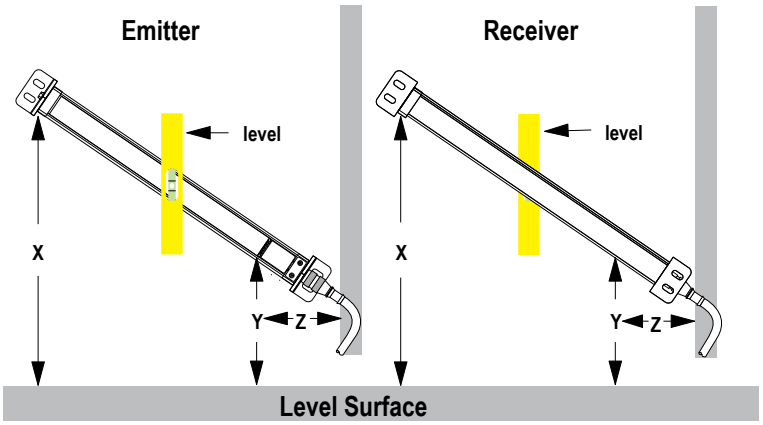

Vertical Installations – verify that:

- Distance X at the emitter and receiver are equal
- Both sensors are level/plumb (check both the side and face)
- Defined area is square. Check diagonal measurements if possible (Diagonal A = Diagonal B).

Figure 27. For vertical installations

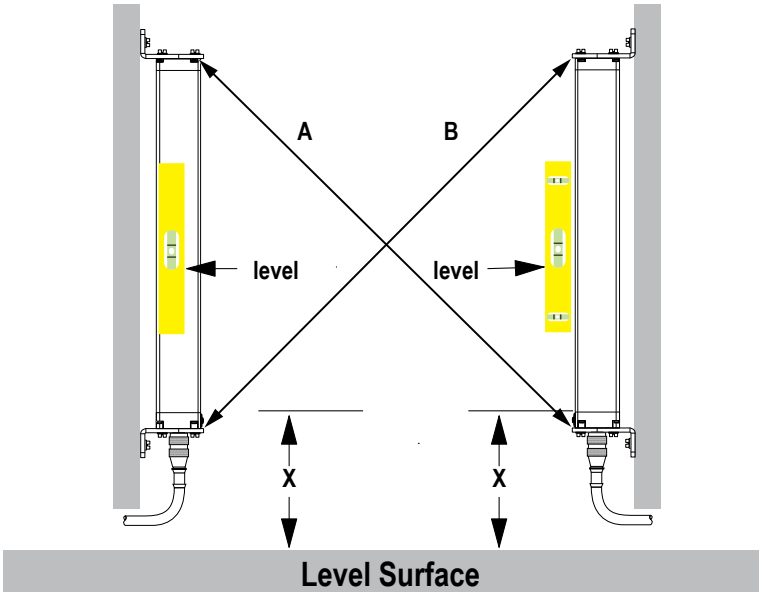

6 Electrical Installation and Testing

WARNING:

- **Read this Section Carefully Before Installing the System**
- **Failure to follow these instructions could result in serious injury or death.**
- If all mounting, installation, interfacing, and checkout procedures are not followed properly, this Banner Engineering device cannot provide the protection for which it was designed.
- The user is responsible for ensuring that all local, state, and national laws, rules, codes, or regulations relating to the installation and use of this control system in any particular application are satisfied. Ensure that all legal requirements have been met and that all technical installation and maintenance instructions contained in this manual are followed.
- The user has the sole responsibility to ensure that this Banner Engineering device is installed and interfaced to the guarded machine by Qualified Persons, in accordance with this manual and applicable safety regulations. A Qualified person is a person who, by possession of a recognized degree or certificate of professional training, or who, by extensive knowledge, training and experience, has successfully demonstrated the ability to solve problems relating to the subject matter and work.

The following are the main steps to electrically install the EZ-SCREEN LS Basic components and interface with the guarded machine:

1. Routing cordsets and making initial electrical connections (see Routing Cordsets on page 36 and Initial Electrical Connections on page 37).
2. Apply power to each emitter/receiver pair (see Initial Electrical Connections on page 37).
3. Perform an Initial Checkout Procedure (see Initial Checkout Procedure on page 37).
4. Make all electrical interface connections to the guarded machine (see Electrical Connections to the Guarded Machine on page 41).
5. Perform a commissioning checkout procedure (see Commissioning Checkout on page 56).

6.1 Routing Cordsets

Attach the required cordsets to the sensors, and route the sensor cables to the junction box, electrical panel, or other enclosure in which the interface module, the redundant mechanically linked interposing relays, FSDs, or other safety-related parts of the control system are located. This must be done per local wiring code for low-voltage dc control cables and may require installation of electrical conduit. See Cordsets on page 62 for selection of Banner supplied cables.

EZ-SCREEN LS Basic is designed and manufactured to be highly resistant to electrical noise and to operate reliably in industrial settings. However, extreme electrical noise may cause a random Trip condition; in extreme cases, a Lockout is possible.

Emitter and receiver wiring is low voltage; routing the sensor wires alongside power wires, motor/servo wires, or other high voltage wiring may inject noise into the EZ-SCREEN LS Basic System. It is good wiring practice, and sometimes may be required by code, to isolate emitter and receiver cables from high-voltage wires, avoid routing cables close to “noisy” wiring, and provide a good connection to earth ground.

Sensor cabling and any interconnect wiring should have an insulation temperature rating of at least 90 °C (194 °F).

Installation/Replacement of RD Cordsets— To remove the Removable Disconnect (RD) cordset, unscrew the two Phillips screws and carefully pull the connector straight back. To install an RD Cordset:

1. Slide the RD connector firmly into housing's RD port. (Ensure rectangular gasket is installed.)
2. Tighten the Phillips screws at base of connector to lock into place. Do not over tighten.

Note: The machine interface cable (e.g. RDLS-8xxD, DELSE-8xxD) must connect to the sensor end adjacent to the indicators and serial number label for the system to operate properly.

Table 5: Maximum machine interface cable length versus total load current (OSSDs)

Maximum Machine Interface Cordset Length				
Total Load Current (OSSD 1 + OSSD 2)				
0.1 A	**0.25 A**	**0.5 A**	**0.75 A**	**1.0 A**
95.7 m (314 ft)	78 m (256 ft)	54.9 m (180 ft)	42.1 m (138 ft)	34.1 m (112 ft)

Note: Emitter and receiver power (current) requirements are accounted for. The above values represent additional current draw that must be accounted for because of the load current.

Note: Maximum cordset lengths are intended to ensure that adequate power is available to the EZ-SCREEN LS Basic when the supply is operating at +20 V dc. Values in the previous table are worse case. Contact banner Engineering if there are any questions.

Note: The length of Emitter machine interface cordsets can be two times longer than those listed for the receiver in the table above if a CSB Splitter cordset is not used. If a CSB Splitter cordset is used, connect one branch of the CSB splitter to the receiver and other branch to the emitter via DEE2R double-ended cordset up to the same length listed in the table above.

6.2 Initial Electrical Connections

WARNING:

- **Risk of electric shock**
- Use extreme caution to avoid electrical shock. Serious injury or death could result.
- Always disconnect power from the safety system (for example, device, module, interfacing, etc.), guarded machine, and/or the machine being controlled before making any connections or replacing any component. Lockout/tagout procedures might be required. Refer to OSHA 29CFR1910.147, ANSI Z244-1, or the applicable standard for controlling hazardous energy.
- Make no more connections to the device or system than are described in this manual. Electrical installation and wiring must be made by a Qualified Person [3] and must comply with the applicable electrical standards and wiring codes, such as the NEC (National Electrical Code), NFPA 79, or IEC 60204-1, and all applicable local standards and codes.

Lockout/tagout procedures may be required (refer to OSHA1910.147, ANSI Z244-1, ISO 14118, or the appropriate standard for controlling hazardous energy). Following relevant electrical standards and wiring codes, such as the NEC, NFPA79 or IEC60204-1, always connect the earth ground (green/yellow wire). **Do not operate the EZ-SCREEN LS Basic without an earth ground connection.**

Make the electrical connections in the order described in this section. Do not remove end-caps; no internal connections are to be made. All connections are made through the RD or pigtail QD connections.

Emitter Cordset

EZ-SCREEN LS Basic emitters have either a 5-pin or 8-pin cordset, but not all conductors are used. The other wires are in place to allow a parallel connection (color-for-color) to the receiver cable, providing sensor interchangeability (or “swapability”); either sensor may be installed at either cordset connection. In addition to providing similar cabling, this wiring scheme is advantageous during installation, wiring, and troubleshooting.

Receiver Cordset—5-pin

Do not connect any wires to the machine control circuits (OSSD outputs) at this time.

Receiver Cordset—8-pin

Do not connect any wires to the machine control circuits (OSSD outputs) at this time. For the initial power-up and checkout, External Device Monitoring (EDM) must be configured/wired (see External Device Monitoring on page 44), the Scan Code must be selected (see Scan Code Select on page 45), and the Fault Output can be connected (see Fault Output on page 12). Take precautions to prevent unused wires from shorting to ground or to other sources of energy (for example, terminate with a wire-nut). Final OSSD wiring must be completed later.

6.3 Initial Checkout Procedure

The initial checkout procedure must be performed by a Qualified Person. It must be performed only after configuring the System and after connecting the components.

Perform this procedure to:

- Ensure proper installation when the System is first installed

[3] A person who, by possession of a recognized degree or certificate of professional training, or who, by extensive knowledge, training and experience, has successfully demonstrated the ability to solve problems relating to the subject matter and work.

- Ensure proper System function whenever any maintenance or modification is performed on the System or on the machinery that is guarded by the System.

6.3.1 Configuring the System for Initial Checkout

For the initial checkout, the EZ-SCREEN LS Basic System must be checked without power available to the guarded machine. Final interface connections to the guarded machine cannot take place until the light screen system has been checked out. This may require lockout/tagout procedures (refer to OSHA1910.147, ANSI Z244-1, ISO 14118, or the appropriate standard for controlling hazardous energy). The OSSD connections will be made after the initial checkout procedure has been successfully completed.

Verify that:

- Power has been removed from (or is not available to) the guarded machine and its controls or actuators
- The machine control circuit or the Safety/Interface Module is not connected to the OSSD outputs at this time (permanent connections will be made later)
- EDM is configured and wired per application requirements (1-channel or no monitoring, see External Device Monitoring on page 44)

6.3.2 Initial Power-Up

1. Inspect the area near the light screen for reflective surfaces, including work pieces and the guarded machine. Reflective surfaces may cause light beams to reflect around a person in the light screen, preventing the person from being detected and not stopping the machine motion (see Adjacent Reflective Surfaces on page 26).
2. Eliminate the reflective surfaces as much as possible by relocating, painting, masking, or roughening them. Remaining problem reflections will become apparent during the trip test.
3. **Verify that power is removed** from the EZ-SCREEN LS Basic Safety Light Curtain System and from the guarded machine and that the OSSD safety outputs are not connected.
4. Remove all obstructions from the light screen.
5. With the power to the guarded machine Off, make external device monitoring (EDM), power, and earth ground connections on both the emitter and receiver cables (see Reference Wiring Diagrams on page 46). The +24 V dc (brown wire) and 0 V dc (blue wire) should be connected to a SELV-rated supply and GND (green/yellow wire) to earth ground. If the installation does not allow direct connection to earth ground via the cordset, the earth ground must be provided via the mounting brackets.
6. Power up the EZ-SCREEN LS Basic Safety Light Curtain System only.
7. Verify that the input power is present to both the emitter and the receiver. At least one indicator on both the emitter and the receiver should be On and the start-up sequence should cycle.
8. Watch both the emitter and the receiver Status indicators and the receiver Alignment indicators to determine the light screen alignment status:
    - **An Emitter Lockout Condition**—the emitter Status indicator is single-flashing red; the receiver Status indicator is solid red, and the receiver's 7-segment display reads **CH1**.
    - **A Receiver Lockout Condition**—the receiver Status indicator is single-flashing red, with Alignment and Run mode indicators Off, and the receiver 7-segment display shows an Error Code.
    - **Normal Operating Mode (emitter)**—the Status indicator is solid green.
    - **Clear (Run) Condition (receiver)**—the Status indicator is solid green, and the Run mode indicator is solid amber. All Alignment indicators are solid green.
    - **A Blocked Condition (receiver)**—The Status indicator is solid red, Run mode indicator is solid amber, one or more Alignment indicator(s) are solid red, identifying the location of the blocked beams, and the number of blocked beams is displayed.

    Note: If beam 1 is blocked, the Alignment indicator 1 will be red and all others Off. Beam 1 provides the synchronization signal.
9. Proceed to Optical Alignment on page 38.

6.3.3 Optical Alignment

WARNING:

- **Hazard exposure**
- Failure to follow these instructions could result in serious injury or death.
- Verify that no individuals are exposed to any hazard if the output signal switching device (OSSD) outputs turn on when the emitter and receiver become aligned.

Verify the optimal alignment, adjusting the sensor rotation with the power on:

1. Verify that the emitter and the receiver are pointed squarely at each other. Use a straight edge (for example, a level) to determine the direction the sensor is facing. The sensor face must be perpendicular to the optical axis.

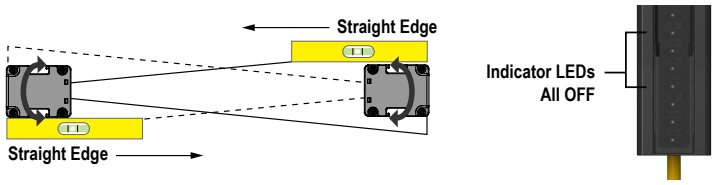

Note: At power-up, all indicators are tested (flash), then the Scan Code is displayed.

2. Turn on the power to the emitter and receiver. If the Channel #1 beam is not aligned, the Status and Alignment indicator 1 will be red, the Run mode indicator will be off, and the 7-segment display sequentially indicates **CH1**. All the Alignment indicators (2-n) will be off.

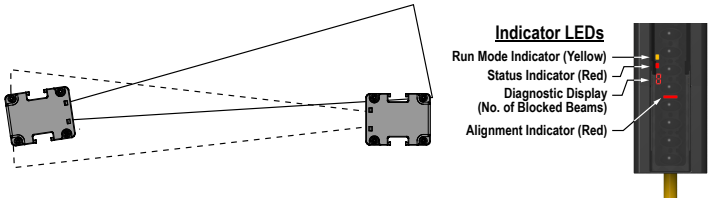

3. If the green Status and amber Run mode indicators are on, go to the next step. If not, rotate each sensor (one at a time) left and right until the green Status indicator is on. (As the sensor rotates out of alignment, the red Status indicator turns on). As more beams are aligned, the Alignment indicators turn from red to green and the number of blocked beam indicators decreases.

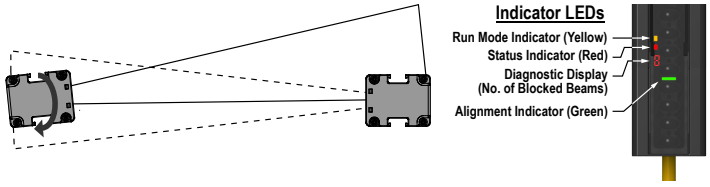

4. To optimize alignment and maximize excess gain, slightly loosen the sensor mounting screws and rotate one sensor left and right, noting the positions in each arc where the Status indicators turn red (blocked condition); repeat with the other sensor. Center each sensor between those two positions and tighten the mounting screws, making sure to maintain the positioning as the screws are tightened.

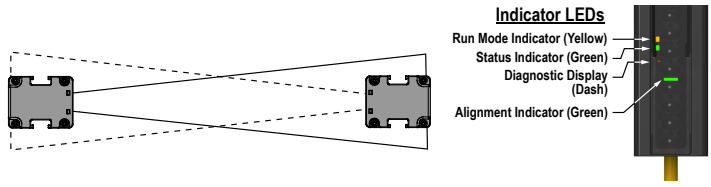

For situations where alignment is difficult, a LAT-1-SS Laser Alignment Tool can be used to assist or confirm alignment by providing a visible red dot along the sensor's optical axis (see Alignment Aids on page 70).

Note: If at any time the red Status indicator begins to flash steadily, the System has entered a Lockout condition. See Troubleshooting on page 58 for further information.

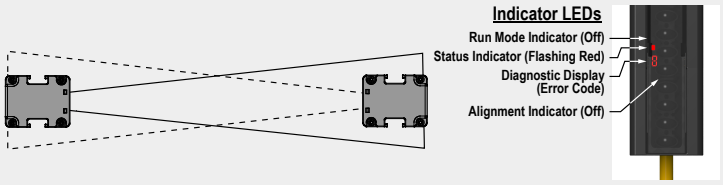

6.3.4 Optical Alignment Procedure with Mirrors

EZ-SCREEN LS Basic sensors may be used with one or more corner mirrors for guarding more than one side of an area. The MSM-... and SSM-... rear-surface glass mirrors are rated at 85% efficiency. Thus, excess gain and sensing range are reduced when using mirrors; see Use of Corner Mirrors on page 28.

During any adjustments, allow only one individual to adjust any one item at any one time. In addition to the standard optical alignment procedure, verify:

1. The emitter, receiver, and all mirrors are level and plumb.
2. The middle of the defined area and the center point of the mirrors are approximately the same distance from a common reference point, such as the same height above a level floor.
3. There are equal amounts of mirror surface above and below the defined area such that the optical beams are not passing below or above the mirror.

Note: An LAT-1 Laser Alignment Tool is very helpful by providing a visible red dot along the optical axis. See Alignment Aids on page 70, Figure 28 on page 40, and Banner Safety Applications Note SA104 (p/n 57477) for more information.

Figure 28. Optical alignment using the LAT-1

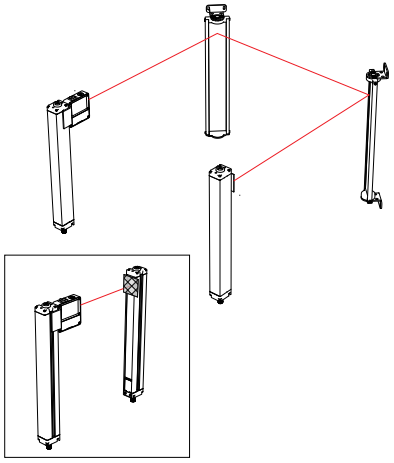

Figure 29. Corner Mirror Alignment

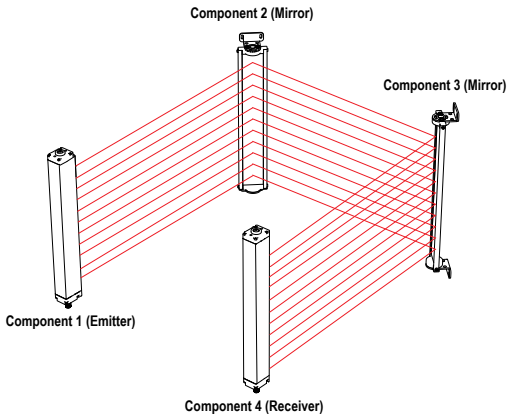

6.3.5 Perform a Trip Test

After optimizing the optical alignment and configuring fixed blanking (if applicable), perform the trip test to verify the detection capability of the EZ-SCREEN LS Basic System. This test also verifies correct sensor orientation and identifies optical short circuits. After the installation has passed the trip test, the safety outputs may be connected and the commissioning checkout may be performed (initial installations only).

1. Select the proper test piece supplied with the receiver.
   - 23 mm resolution models: 23 mm (0.91 in) dia. Model STP-19
2. Verify that the System is in Run mode, the Green Status indicator is On, all Alignment indicators are green, and the amber Status indicator is On.
3. Pass the specified test piece through the defined area in three paths: near the emitter, near the receiver, and midway between the emitter and receiver.

Figure 30. Trip Test

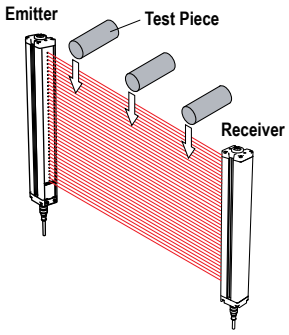

4. During each pass, while the test piece is interrupting the defined area, **at least one Alignment indicator must be Red. The Red Alignment indicator must change with the position of the test piece within the defined area.**

   If all Alignment indicators turn green or fail to follow the position of the test piece while it is within the defined area, the installation has failed the trip test. Check for correct sensor orientation and reflective surfaces.

   When the test piece is removed from the defined area, in trip output operation, the green Status indicator must turn on .

WARNING:
- **Trip test failure**
- Using a system that has failed a trip test can result in serious bodily injury or death. If the trip test has failed, the system might not stop dangerous machine motion when a person or object enters the sensing field.
- Do not attempt to use the system if the system does not respond properly to the trip test.

5. If mirrors are used in the application: Test the defined area on each leg of the sensing path (for example, emitter to mirror, between mirror and receiver).

Figure 31. Trip Test with Corner Mirror

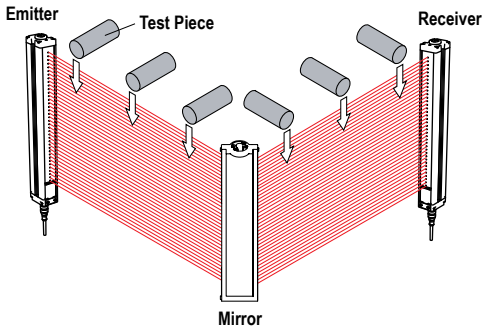

6. If the EZ-SCREEN LS Basic System passes all checks during the trip test, go on to Electrical Connections to the Guarded Machine on page 41.

6.4 Electrical Connections to the Guarded Machine

Verify that power has been removed from the EZ-SCREEN LS Basic and the guarded machine. Make the permanent electrical connections as described in OSSD Output Connections on page 42 and FSD Interfacing Connections on page 42 as required by each individual application.

Lockout/tagout procedures may be required (refer to OSHA 1910.147, ANSI Z244-1, ISO 14118, or the appropriate standard for controlling hazardous energy). Follow relevant electrical standards and wiring codes, such as the NEC, NFPA79 or IEC 60204-1.

Supply power and external device monitoring (EDM) should already be connected. The EZ-SCREEN LS Basic must also have been aligned and passed the Initial Checkout, as described in Initial Checkout Procedure on page 37.

The final connections to be made or verified are:

- OSSD outputs (see OSSD Output Connections on page 42)
- FSD interfacing (see FSD Interfacing Connections on page 42)
- MPCE/EDM (see Machine Primary Control Elements and EDM Input on page 43)
- Fault Output (see Fault Output on page 12)
- Scan Code Select (see Scan Code Select on page 45)

WARNING:
- **Risk of electric shock**
- Use extreme caution to avoid electrical shock. Serious injury or death could result.
- Always disconnect power from the safety system (for example, device, module, interfacing, etc.), guarded machine, and/or the machine being controlled before making any connections or replacing any component. Lockout/tagout procedures might be required. Refer to OSHA 29CFR1910.147, ANSI Z244-1, or the applicable standard for controlling hazardous energy.
- Make no more connections to the device or system than are described in this manual. Electrical installation and wiring must be made by a Qualified Person [4] and must comply with the applicable electrical standards and wiring codes, such as the NEC (National Electrical Code), NFPA 79, or IEC 60204-1, and all applicable local standards and codes.

6.4.1 OSSD Output Connections

Refer to the output specifications in the Specifications on page 16 and these warnings before making OSSD output connections and interfacing the EZ-SCREEN LS Basic to the machine.

WARNING:
- **Interfacing both output signal switching devices (OSSD)**
- Failure to follow these instructions could result in serious injury or death.
- Unless the same degree of safety is maintained, never wire an intermediate device(s) (PLC, PES, PC) between the safety module outputs and the master stop control element it switches such that a failure causes a loss of the safety stop command or the failure allows the safety function to be suspended, overridden, or defeated.
- Connect both OSSD outputs to the machine control so that the machine's safety-related control system interrupts the circuit to the machine primary control element(s), resulting in a non-hazardous condition.

WARNING:
- **OSSD Interfacing**
- Failure to properly interface the OSSD Outputs to the guarded machine could result in serious injury or death.
- To ensure proper operation, the Banner device output parameters and machine input parameters must be considered when interfacing the Banner device OSSD outputs to machine inputs. Design machine control circuitry so that all of the following are true:

  The maximum load resistance value is not exceeded.
  The maximum specified OSSD OFF-state voltage does not result in an ON condition.

6.4.2 FSD Interfacing Connections

Final switching devices (FSDs) take many forms. The most common are forced-guided devices, mechanically linked relays, or interface modules. The mechanical linkage between the contacts allows the device to be monitored by the external device monitoring (EDM) circuit for certain failures.

Depending on the application, the use of FSDs can facilitate controlling voltage and current that differs from the OSSD outputs of the EZ-SCREEN LS Basic. FSDs can also be used to control an additional number of hazards by creating multiple safety stop circuits.

[4] A person who, by possession of a recognized degree or certificate of professional training, or who, by extensive knowledge, training and experience, has successfully demonstrated the ability to solve problems relating to the subject matter and work.

Protective Stop (Safety Stop) Circuits

A protective stop (safety stop) allows for an orderly cessation of motion for safeguarding purposes, which results in a stop of motion and removal of power from the MPCEs (assuming this does not create additional hazards).

A protective stop circuit typically comprises a minimum of two normally open contacts from forced-guided, mechanically linked relays, which are monitored through External Device Monitoring (EDM) to detect certain failures to prevent the loss of the safety function. Such a circuit can be described as a "safe switching point". Typically, protective stop circuits are either single-channel, which is a series connection of at least two normally open contacts; or dual-channel, which is a separate connection of two normally open contacts. In either method, the safety function relies on the use of redundant contacts to control a single hazard. If one contact fails On, the second contact arrests the hazards and prevents the next cycle from occurring. See Generic Wiring Diagram—8-pin Receiver and Redundant FSDs on page 51.

The interfacing of the protective stop circuits must be accomplished so that the safety function cannot be suspended, overridden, or defeated, unless accomplished in a manner of the same or greater degree of safety as the machine's safety related control system that includes the EZ-SCREEN LS Basic.

The normally open safety outputs from an interface module provide a series connection of redundant contacts that form protective stop circuits for use in either single-channel or dual-channel control. See Generic Wiring Diagram—8-pin Receiver and Redundant FSDs on page 51.

Dual-Channel Control

Dual-channel control provides the ability to electrically extend the safe switching point beyond the FSD contacts.

With proper monitoring, this method of interfacing is capable of detecting certain failures in the control wiring between the safety stop circuit and the MPCEs. These failures include a short-circuit of one channel to a secondary source of energy or voltage, or a loss of the switching ability of one of the FSD outputs. Such failures may lead to a loss of redundancy, or to a complete loss of safety, if not detected and corrected.

The possibility of a failure to the wiring increases as the physical distance between the FSD safety stop circuits and the MPCEs increases, as the length or the routing of the interconnecting wires increases, or if the FSD safety stop circuits and the MPCEs are located in different enclosures. For this reason, dual-channel control with EDM monitoring should be used in any installation where the FSDs are located remotely from the MPCEs.

Single-Channel Control

Single-channel control uses a series connection of FSD contacts to form a safe switching point.

After this point in the machine's safety-related control system, failures can occur that would result in a loss of the safety function (such as a short-circuit to a secondary source of energy or voltage). For this reason, single-channel control interfacing should be used only in installations where FSD safety stop circuits and the MPCEs are mounted within the same control panel, adjacent to each other, and are directly connected to each other; or where the possibility of such a failure can be excluded. If this cannot be achieved, then dual-channel control should be used.

Methods to exclude the possibility of these failures include, but are not limited to:

- Physically separating interconnecting control wires from each other and from secondary sources of power
- Routing interconnecting control wires in separate conduit, runs, or channels
- Locating all elements (modules, switches, and devices under control) within one control panel, adjacent to each other, and directly connected with short wires
- Properly installing multi-conductor cabling and multiple wires through strain relief fittings. Over-tightening of a strain-relief can cause short-circuits at that point.
- Using positive-opening or direct-drive components, installed and mounted in a positive mode

6.4.3 Machine Primary Control Elements and EDM Input

A machine primary control element (MPCE) is an electrically powered element that directly controls the normal operation of a machine in such a way that it is the last element (in time) to function when machine operation is to be initiated or arrested (per IEC 61496-1). Examples include motor contactors, clutch/brakes, valves, and solenoids.

Depending on the level of risk of harm, it may be required to provide redundant MPCEs or other control devices that are capable of immediately stopping the dangerous machine motion, irrespective of the state of the other. These two machine control channels need not be identical (diverse redundant), but the stop time performance of the machine (Ts, used to calculate the safety distance, see Calculating the Safety Distance (Minimum Distance) on page 21) must take into account the slower of the two channels. Consult the machine manufacturer for additional information.

To ensure that an accumulation of failures does not compromise the redundant control scheme (cause a failure to danger), a method to verify the normal functioning of MPCEs or other control devices is required. EZ-SCREEN LS Basic provides a convenient method for this verification: external device monitoring (EDM).

For the EZ-SCREEN LS Basic external device monitoring to function properly, each device must include a normally closed, forced-guided (mechanically linked) contact that can accurately reflect the status of the device. This ensures that the normally open contacts, used for controlling hazardous motion, have a positive relationship with the normally closed monitoring contacts and can detect a failure to danger (for example, contacts that are welded closed or stuck On).

It is strongly recommended that a normally closed, forced-guided monitoring contact of each FSD and MPCE be connected in series with the EDM input (see Generic Wiring Diagram—8-pin Receiver and Redundant FSDs on page 51). If this is done, proper operation will be verified. Monitoring FSD and MPCE contacts is one method of maintaining control reliability (OSHA/ANSI) and Category 3 and 4 (ISO 13849-1).

If monitoring contacts are not available or do not meet the design requirement of being forced-guided (mechanically linked), it is recommended you:

- Replace the devices so that they are capable of being monitored; or
- Incorporate the EDM function into the circuit as close to the MPCE as possible (for example, monitor the FSDs); and
- Employ the use of well-tried, tested, and robust components, and generally accepted safety principles, including fault exclusion, into the design and installation to either eliminate, or reduce to an acceptable (minimal) level of risk, the possibility of undetected faults or failures that can result in the loss of the safety function.

The principle of fault exclusion allows the designer to design out the possibility of various failures and justify it through the risk assessment process to meet the required level of safety performance, such as the requirements of Category 2, 3, or 4. See ISO 13849-1/-2 for further information.

WARNING:

- **External Device Monitoring (EDM)**
- Creating a hazardous situation could result in serious injury or death.
- If the system is configured for “no monitoring,” it is the user’s responsibility to ensure this does not create a hazardous situation.

6.4.4 External Device Monitoring

EZ-SCREEN LS Basic Safety Light Curtain provides two possible EDM configurations: 1-channel monitoring and no monitoring. Their functions are described below. The most common form of EDM is 1-channel monitoring; its primary advantages is the simplicity of wiring. The installation must prevent short circuits across the N.C. monitoring contacts and to secondary sources of power.

Figure 32. One-channel EDM status, with respect to safety output

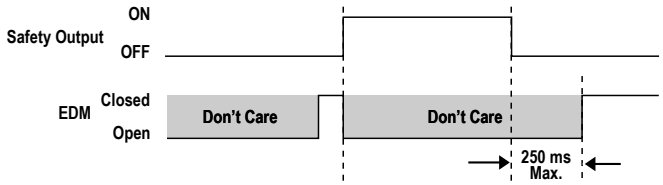

External Device Monitoring Wiring

If not connected previously, it is again strongly recommended that one normally closed, forced-guided monitoring contact of each FSD and MPCE be wired as shown in the monitoring circuit (see Generic Wiring Diagram—8-pin Receiver and IM-T-9A Interface Module on page 52). Pin 3 of the receiver connector provides connection for the external device monitoring input.

External device monitoring (EDM) must be wired in one of two configurations described below.

One-Channel Monitoring: This is a series connection of normally closed monitor contacts that are force-guided (mechanically linked) from each device controlled by the EZ-SCREEN LS Basic. The monitor contacts must be closed before the EZ-SCREEN LS Basic OSSDs can turn On. After the safety outputs (OSSDs) turn On, the status of the monitor contacts are no longer monitored and may change state. However, the monitor contacts must be closed within 250 milliseconds of the OSSD outputs going from On to Off.

Refer to Generic Wiring Diagram—8-pin Receiver and IM-T-9A Interface Module on page 52 for wiring. Connect the monitor contacts between +24 V DC and EDM (pin 3).

No Monitoring: Use this configuration to perform the initial checkout; see Initial Checkout Procedure on page 37. If the application does not require the EDM function, it is the user's responsibility to ensure that this configuration does not create a hazardous situation.

To configure the EZ-SCREEN LS Basic Safety Light Curtain for no monitoring, connect EDM (Pin 3) to +24 V DC.

WARNING: Retrofit of 2-channel EDM Installations—In existing installations using 2-channel external device monitoring (default setting of EZ-SCREEN and EZ-SCREEN LP systems), **the parallel wiring of the N.C. monitoring contacts must be rewired for the series connection used for 1-channel EDM**. If the required wiring changes are not made, the device connected to pin 2 (Orn/Blk) will not be monitored and could result in undetected faults and create an unsafe condition, which could result in serious bodily injury or death. **If there are any questions concerning retrofit installations, contact Banner Engineering.**

6.4.5 Fault Output

The current sourcing (PNP) solid-state output (70 mA maximum) is used for control functions that are not safety related; a typical use is to signal a lockout (fault) to a programmable logic controller (PLC). Available on both the receiver and emitter, the output provides a fault signal (lockout = On). Interrupting (blocking) the sensing field is not considered a lockout, so the Fault Output does not change state.

This feature is available only when an 8-conductor interface is used.

6.4.6 Scan Code Select

Emitter and receiver models interfaced with 8 conductor cables may be configured to one of two Scan Codes (1 or 2). A receiver recognizes light only from an emitter with the same scan code. The scan code is configured at power-up and remains set until the input is changed and power is cycled.

- Select Scan Code 1 by connecting pin 8 (violet wire) to 0 V DC or leaving it open (not connected). Prevent unused wires from shorting to ground or to other sources of energy (for example, terminate with wire-nut).
- Select Scan Code 2 by connecting pin 8 (violet wire) to +24 V DC.

Both the emitter and its corresponding receiver must have the same setting. Emitter and receiver models interfaced with 5-conductor cables are always configured for Scan Code 1.

6.4.7 Preparing for System Operation

After the initial trip test has been accomplished, and the OSSD safety outputs and EDM connections have been made to the machine to be controlled, the EZ-SCREEN LS Basic is ready for testing in combination with the guarded machine.

The operation of the EZ-SCREEN LS Basic with the guarded machine must be verified before the combined System and machine may be put into service. To do this, a Qualified Person must perform the Commissioning Checkout Procedure (see Commissioning Checkout on page 56).

6.4.8 Sensor Interchangeability

The figures and table below illustrate a wiring option that provides sensor interchangeability (or swapability)—the ability to install either sensor at either QD connection.

The resulting installation provides the ability to swap the emitter and receiver position. This wiring option provides advantages during installation, wiring, and troubleshooting.

To use this option, connect all emitter wires in parallel (color-for-color) to the receiver cable via individual wires or the CSB.. splitter cordset (can be used with only emitters and receivers with similar connectors, such as a pair with 8-pin quick disconnects or a pair with 5-pin quick disconnects.).

Model CSB.. splitter cordsets and DEE2R.. double-ended cordsets allow easy interconnection between an EZ-SCREEN LS Basic receiver and emitter, providing a single homerun cordset.

Figure 33. Individual cordsets

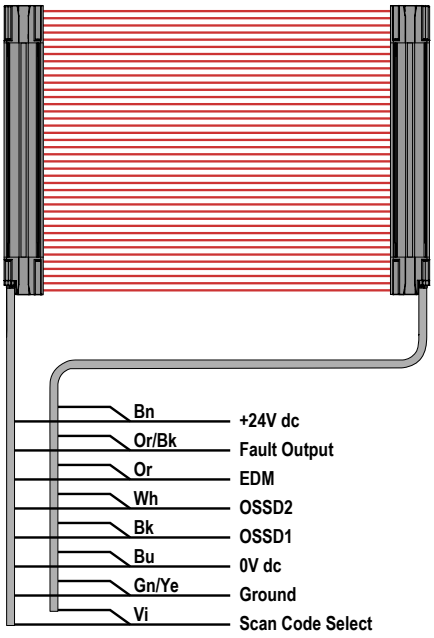

Figure 34. Splitter cordsets

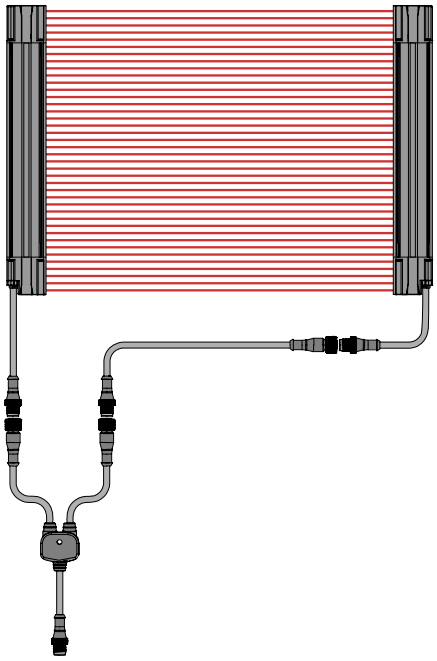

6.5 Reference Wiring Diagrams

Other interfacing modules and solutions are available, see Accessories on page 62 and www.bannerengineering.com.

Note: For interfacing modules or remotely located safety I/O blocks where pin 5 of a 5-pin M12 QD is not earth ground, a 4-pin cordset where pin 5 is not physically present or is not electrically connected can be used (such as MQDEC-406SS double-ended cordset). In such situations, earth ground must be provided via the mounting brackets.

6.5.1 Generic Wiring Diagram—5-pin and 8-pin Emitter

Figure 35. Generic Wiring Diagram—Emitter

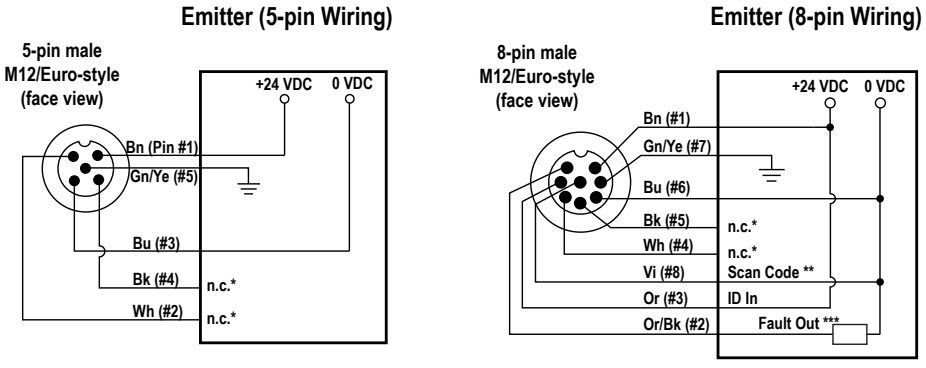

* All pins shown as no connection (n.c.) are either not connected or are paralleled to same color wire from the receiver cable.

** Scan Code 1: Not connected or connected to 0 V DC (as shown). Scan Code 2: connect to 24 V DC.

*** Fault Out: Not connected or connect indicator (70 mA maximum) to 0 V DC (as shown).

6.5.2 Generic Wiring Diagram—5-pin Receiver and UM-FA-..A Safety Module

Figure 36. Generic Wiring Diagram - UM-FA..A with Auto Reset

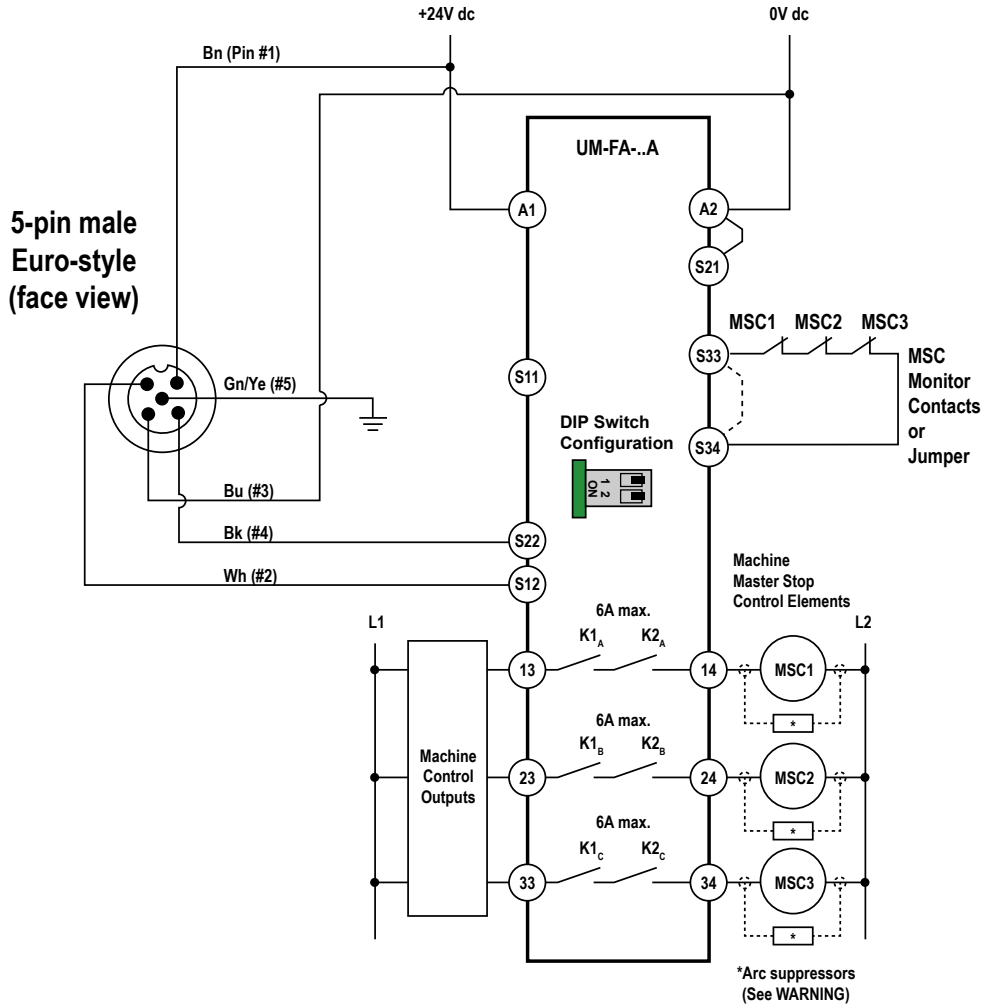

Figure 37. Generic Wiring Diagram - UM-FA..A with Manual Reset

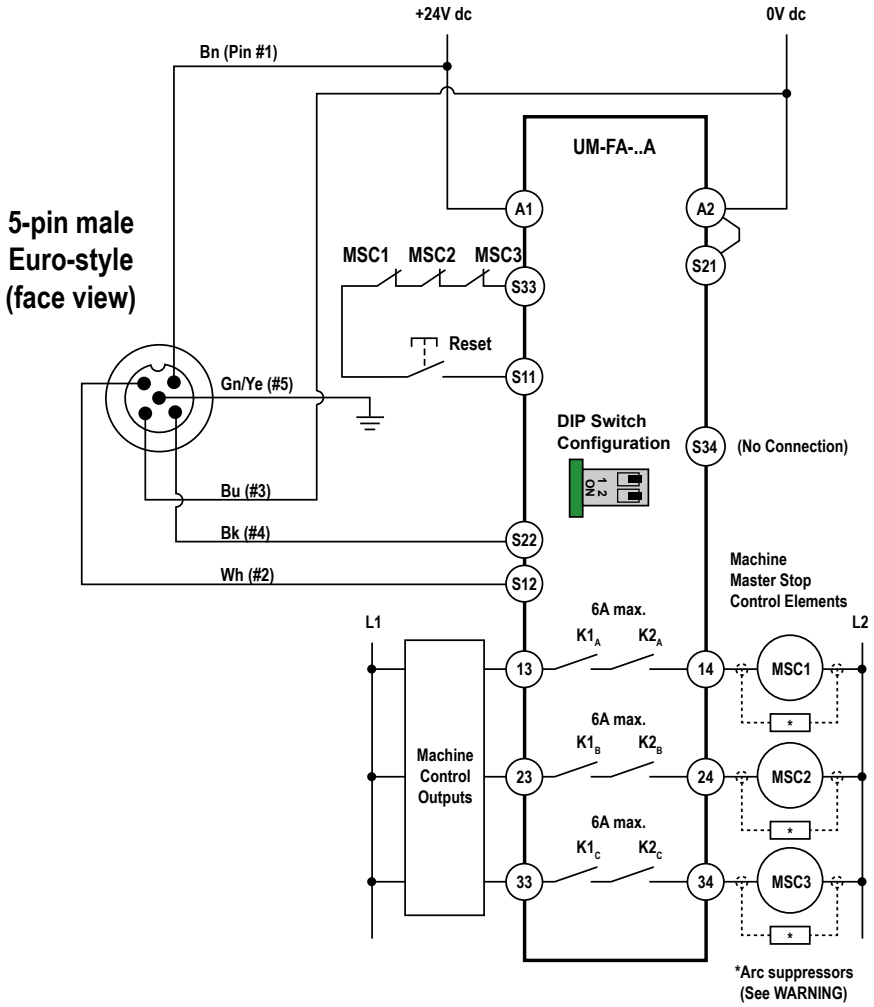

Note: See **UM-FA-..A** module datasheet (p/n 141249) for complete installation instructions.

WARNING:

- **Properly install arc or transient suppressors**
- Failure to follow these instructions could result in serious injury or death.
- Install any suppressors as shown across the coils of the machine primary control elements. Do not install suppressors directly across the output contacts of the safety or interface module. In such a configuration, it is possible for suppressors to fail as a short circuit.

6.5.3 Generic Wiring Diagram—5-pin Receiver and Safety Module/ Controller or Safety PLC/PES

Figure 38. Generic Wiring Diagram—XS/SC26-2 Safety Controller

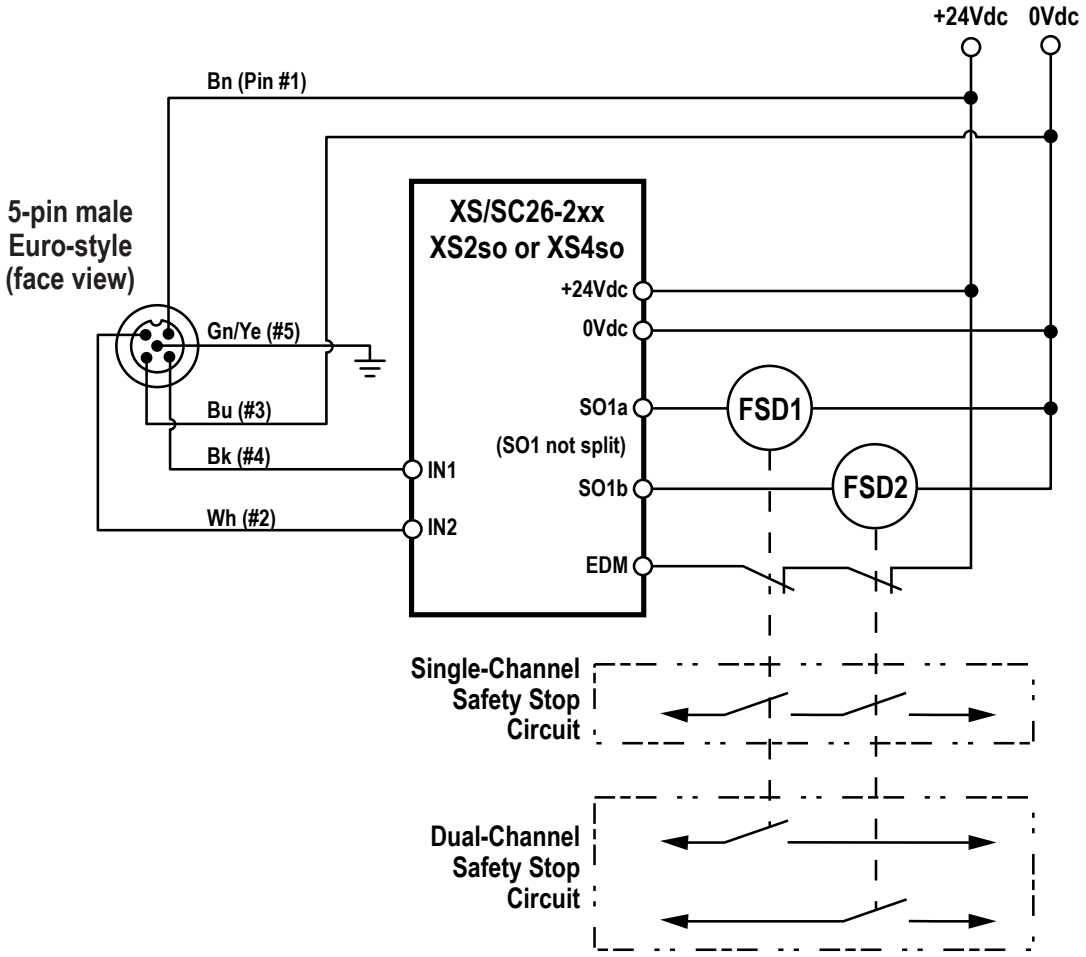

Note: See the XS/SC26-2.. instruction manual (p/n 174868) for complete installation instructions.

6.5.4 Generic Wiring Diagram—8-pin Receiver and a Smart Device

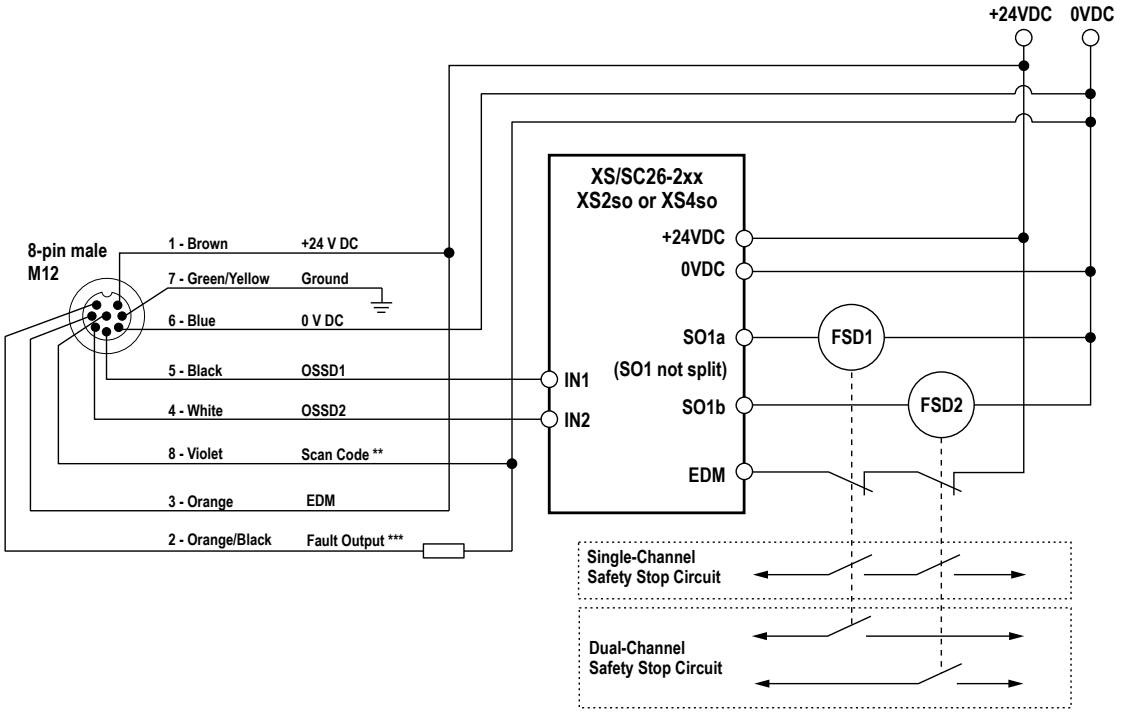

** Scan Code 1: Not connected or connected to 0VDC (as shown). Scan Code 2: Connect to 24VDC.

*** Fault Out: Not connected or connect indicator (70 mA maximum) to 0VDC (as shown).

6.5.5 Generic Wiring Diagram—8-pin Receiver and Redundant FSDs

Figure 39. Generic Wiring Diagram—8-pin Receiver and Redundant FSDs

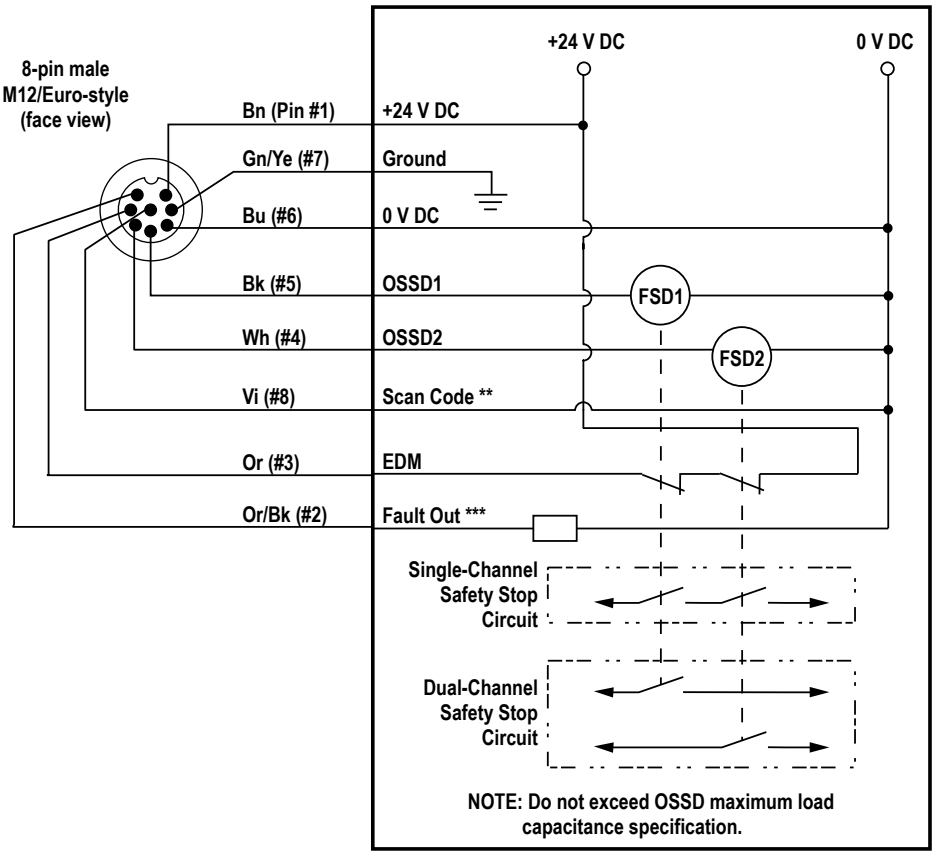

** Scan Code 1: Not connected or connected to 0 V DC (as shown). Scan Code 2: connect to 24 V DC.

*** Fault Out: Not connected or connect indicator (70 mA maximum) to 0 V DC (as shown).

6.5.6 Generic Wiring Diagram—8-pin Receiver and IM-T-9A Interface Module

Figure 40. Generic Wiring Diagram—IM-T-9A Interface Module (1-Channel EDM)

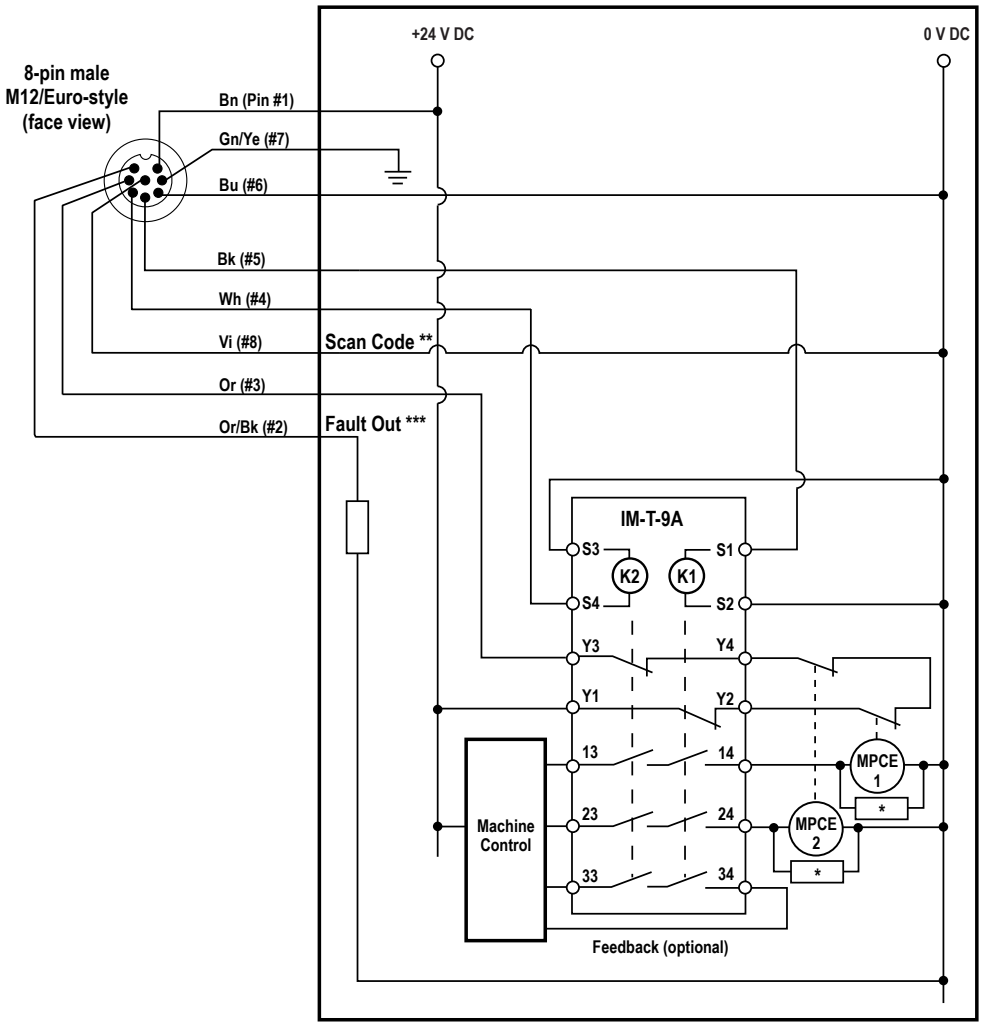

* Installation of transient (arc) suppressors across the coils of MPCE1 and MPCE2 is recommended (see WARNING).

** Scan Code 1: Not connected or connected to 0 V DC (as shown). Scan Code 2: connect to 24 V DC.

*** Fault Out: Not connected or connect indicator (70 mA maximum) to 0 V DC (as shown).

Other interfacing modules and solutions available. See the Banner Engineering catalog or website for more information.

Note: See the IM-T-..A module datasheet (p/n 62822) for complete installation instructions.

WARNING:

- **Properly install arc or transient suppressors**
- Failure to follow these instructions could result in serious injury or death.
- Install any suppressors as shown across the coils of the machine primary control elements. Do not install suppressors directly across the output contacts of the safety or interface module. In such a configuration, it is possible for suppressors to fail as a short circuit.

7 System Operation

7.1 Security Protocol

Certain procedures for installing, maintaining, and operating the EZ-SCREEN LS Basic must be performed by either Designated Persons or Qualified Persons.

A **Designated Person** is identified and designated in writing, by the employer, as being appropriately trained and qualified to perform system resets and the specified checkout procedures on the EZ-SCREEN LS Basic. The Designated Person is empowered to:

- Perform manual resets and hold possession of the reset key (see Recovery Procedures on page 58)
- Perform the Daily Checkout Procedure

A **Qualified Person**, by possession of a recognized degree or certificate of professional training, or by extensive knowledge, training, and experience, has successfully demonstrated the ability to solve problems relating to the installation of the EZ-SCREEN LS Basic System and its integration with the guarded machine. In addition to everything for which the Designated Person is empowered, the Qualified Person is empowered to:

- Install the EZ-SCREEN LS Basic System
- Perform all checkout procedures
- Make changes to the internal configuration settings
- Reset the System following a Lockout condition

7.2 Status Indicators

7.2.1 Emitter

A single bi-color red/green status indicator shows whether power is applied, and whether the emitter is in a Run mode or a Lockout. A Diagnostic Display indicates a specific error code when the emitter is in Lockout; the display also momentarily indicates the scan code setting at power-up.

Table 6: Emitter Status Indicator Operation

Operating Status	Status Indicator	7-Segment Diagnostic Display
Power-up	Red Single Flash	Scan code flashes 3 times - sequentially  or
Run Mode	Green	
Lockout	Flashing Red	Displays error code (see Troubleshooting on page 58)

7.2.2 Receiver

A single bi-color red/green status indicator shows when the OSSD outputs are On (green) or Off (red), or the System is in Lockout status (flashing red).

An amber status indicator shows when the system is in Run mode.

The Diagnostic Display indicates the receiver's trip (–) configuration and displays a specific error code when the receiver is in Lockout. The Diagnostic Display also momentarily indicates the scan code setting at power-up.

Along the length of the exit window are located bi-color red/green Alignment indicators that show whether a section of the defined area (± 35 mm of indicator) is aligned and clear or blocked and/or misaligned.

7.2.3 Receiver Status Indicator Operation - Trip Output

Operating Mode	Run Mode Indicator	Status Indicator	Alignment Indicators [5]	7-Segment Diagnostic Display	OSSD Outputs
Power-up	Off	Single-Flash Red	All Single-Flash Red	Scan code flashes 3 times - sequentially 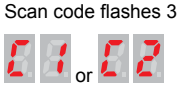 or	Off

[5] If beam 1 is blocked, Alignment indicators will be Off, because beam 1 provides the synchronization signal for all the beams.

Operating Mode	Run Mode Indicator	Status Indicator	Alignment Indicators [5]	7-Segment Diagnostic Display	OSSD Outputs
Alignment Mode - Beam 1 Blocked	Off	Red	Alignment 1 Red, Others Off		Off
Alignment Mode - Beam 1 Clear	On	Red	Red or Green	Total number of blocked beams	Off
Run Mode - Clear	On	Solid Green or Flashing Green (Blanking)	All On Green		On
Run Mode - Blocked	On	Red	Red or Green	Total number of blocked beams	Off
Lockout	Off	Flashing Red	All Off	Displays error code (see Troubleshooting on page 58)	Off

Note: If both the emitter and its corresponding receiver do not have the same scan code setting, the receiver indicates that Beam 1 is blocked (the Diagnostic display indicating "C" "H" "1" as shown above). This can occur if the Scan Code input is not wired the same for both sensors or if the EDM circuit has not been re-wired for one-channel monitoring in retrofit installations of two-channel EDM applications, see warning in the wiring section for External Device Monitoring on page 44.

7.3 Normal Operation

7.3.1 System Power-Up

When power is applied, each sensor conducts self-tests to detect critical internal faults, determine configuration settings, and prepare the EZ-SCREEN LS Basic for operation. If either sensor detects a critical fault, scanning ceases, the receiver outputs remain Off and diagnostic information displays on the sensor's Diagnostic Display. If no faults are detected, the EZ-SCREEN LS Basic automatically enters Alignment mode, and the receiver looks for an optical sync pattern from the emitter. If the receiver is aligned and receives the proper sync pattern, it enters Run mode and begins scanning to determine the blocked or clear status of each beam. No manual reset operation is required.

7.3.2 Run Mode

If any beams become blocked while the EZ-SCREEN LS Basic is running, the receiver outputs turn Off within the stated EZ-SCREEN LS Basic response time (see Specifications on page 16). If all the beams then become clear, the receiver outputs come back On. No resets are needed. All required machine control resets are provided by the machine control circuit.

Internal Faults (Lockouts): If either sensor detects a critical fault, scanning ceases, the receiver outputs turn Off and diagnostic information displays on the sensor's Diagnostic Display. For resolution of error/fault conditions, see Lockout Conditions on page 58.

7.4 Periodic Checkout Requirements

To ensure continued reliable operation, the System must be checked out periodically. Banner Engineering highly recommends performing the System checkouts as described below. However, a Qualified Person should evaluate these recommendations, based on the specific application and the results of a machine risk assessment, to determine the appropriate content and frequency of checkouts.

At every shift change, power-up, and machine setup change, the Daily Checkout should be performed; this checkout may be performed by a Designated or Qualified Person.

Semi-annually, the System and its interface to the guarded machine should be thoroughly checked out; this checkout must be performed by a Qualified Person (see Checkout Procedures on page 56). A copy of these test results should be posted on or near the machine.

Whenever changes are made to the System (either a new configuration of the EZ-SCREEN LS Basic System or changes to the machine), perform the Commissioning Checkout (see Commissioning Checkout on page 56).

[5] If beam 1 is blocked, Alignment indicators will be Off, because beam 1 provides the synchronization signal for all the beams.

Note: Verify Proper Operation

The EZ-SCREEN LS Basic can operate as it is designed only if it and the guarded machine are operating properly, both separately and together. It is the user's responsibility to verify this, on a regular basis, as instructed in Checkout Procedures on page 56. Failure to correct such problems can result in an increased risk of harm.

Before the System is put back into service, verify that the EZ-SCREEN LS Basic System and the guarded machine perform exactly as outlined in the checkout procedures and any problem(s) are found and corrected.

8 Checkout Procedures

This section lists the schedule of checkout procedures and describes where each procedure is documented. Checkouts must be performed as described. Results should be recorded and kept in the appropriate place (for example, near the machine, and/or in a technical file).

Banner Engineering highly recommends performing the System checkouts as described. However, a qualified person (or team) should evaluate these generic recommendations considering their specific application and determine the appropriate frequency of checkouts. This will generally be determined by a risk assessment, such as the one contained in ANSI B11.0. The result of the risk assessment will drive the frequency and content of the periodic checkout procedures and must be followed.

8.1 Schedule of Checkouts

Checkout cards and this manual can be downloaded at www.bannerengineering.com.

Checkout Procedure	When to Perform	Where to Find the Procedure	Who Must Perform the Procedure
Trip Test	At Installation Any time the System, the guarded machine, or any part of the application is altered.	Perform a Trip Test on page 40	Qualified Person
Commissioning Checkout	At Installation Whenever changes are made to the System (for example, either a new configuration of the EZ-SCREEN LS Basic or changes to the guarded machine).	Commissioning Checkout on page 56	Qualified Person
Shift/Daily Checkout	At each shift change Machine setup change Whenever the System is powered up During continuous machine run periods, this checkout should be performed at intervals not to exceed 24 hours.	**Daily Checkout Card** (Banner p/n 179481) A copy of the checkout results should be recorded and kept in the appropriate place (for example, near or on the machine, in the machine's technical file).	Designated Person or Qualified Person
Semi-Annual Checkout	Every six months following System installation, or whenever changes are made to the System (either a new configuration of the EZ-SCREEN LS Basic or changes to the machine).	**Semi-Annual Checkout Card** (Banner p/n 179483) A copy of the checkout results should be recorded and kept in the appropriate place (for example, near or on the machine, in the machine's technical file).	Qualified Person

8.2 Commissioning Checkout

Perform this checkout procedure as part of the System installation after the System has been interfaced to the guarded machine, or whenever changes are made to the System (either a new configuration of the EZ-SCREEN LS Basic or changes to the machine). A Qualified Person must perform the procedure. Checkout results should be recorded and kept on or near the guarded machine as required by applicable standards.

WARNING:
- **Do not use the system until the checkouts are verified**
- Attempts to use the guarded/controlled machine before these checks are verified could result in serious injury or death.
- If all these checks cannot be verified, do not attempt to use the safety system that includes the Banner Engineering device and the guarded/controlled machine until the defect or problem has been corrected.

To prepare the System for this checkout:

1. Examine the guarded machine to verify that it is of a type and design compatible with the EZ-SCREEN LS Basic System. See Appropriate Applications on page 9 for a list of appropriate and inappropriate applications.
2. Verify that the EZ-SCREEN LS Basic is configured for the intended application.
3. Verify that the safety distance (minimum distance) from the closest danger point of the guarded machine to the defined area is not less than the calculated distance, per Calculating the Safety Distance (Minimum Distance) on page 21.
4. Verify that:
   a) Access to any dangerous parts of the guarded machine is not possible from any direction not protected by the EZ-SCREEN LS Basic System, hard (fixed) guarding, or supplemental safeguarding, and
   b) It is not possible for a person to stand between the defined area and the dangerous parts of the machine, or

c) Supplemental safeguarding and hard (fixed) guarding, as described by the appropriate safety standards, are in place and functioning properly in any space (between the defined area and any hazard) which is large enough to allow a person to stand undetected by the EZ-SCREEN LS Basic.

5. If used, verify that all reset switches are mounted outside and in full view of the guarded area, out of reach of anyone inside the guarded area, and that means of preventing inadvertent use is in place.
6. Examine the electrical wiring connections between the EZ-SCREEN LS Basic OSSD outputs and the guarded machine's control elements to verify that the wiring meets the requirements stated in Electrical Connections to the Guarded Machine on page 41.
7. Inspect the area near the defined area (including work pieces and the guarded machine) for reflective surfaces (see Adjacent Reflective Surfaces on page 26). Remove the reflective surfaces if possible by relocating them, painting, masking or roughening them. Remaining problem reflections will become apparent during the Trip Test.
8. Verify that power to the guarded machine is Off. Remove all obstructions from the defined area. Apply power to the EZ-SCREEN LS Basic System.
9. Observe the Status indicators and Diagnostic Display:
   - **Lockout:** Status flashing red; all others Off
   - **Blocked:** Status—Solid red; one or more Alignment indicators— Solid red; Run Mode— Solid amber
   - **Clear:** Status—Solid green; Alignment indicators— Solid green (flashing green indicates blanking is enabled); Run Mode— Solid amber
10. A Blocked condition indicates that one or more of the beams is misaligned or interrupted. To correct this situation, see Optical Alignment on page 38.
11. After the green and amber Status indicators are On, **perform the trip test** (Perform a Trip Test on page 40) on each sensing field to verify proper System operation and to detect possible optical short circuits or reflection problems. **Do not continue until the EZ-SCREEN LS Basic passes the trip test.**



Important: Do not expose any individual to any hazard during the following checks.



WARNING:
- **Clear the guarded area before applying power or resetting the system**
- Failure to clear the guarded area before applying power could result in serious injury or death.
- Verify that the guarded area is clear of personnel and any unwanted materials before applying power to the guarded machine or before resetting the system.

12. Apply power to the guarded machine and verify that the machine does not start up.
13. Interrupt (block) the defined area with the supplied test piece and verify that it is not possible for the guarded machine to be put into motion while the beam(s) is blocked.
14. Initiate machine motion of the guarded machine and, while it is moving, use the supplied test piece to block the defined area. Do not attempt to insert the test piece into the dangerous parts of the machine. Upon blocking any beam, the dangerous parts of the machine must come to a stop with no apparent delay.
15. Remove the test piece from the beam; verify that the machine does not automatically restart, and that the initiation devices must be engaged to restart the machine.
16. Remove electrical power to the EZ-SCREEN LS Basic. Both OSSD outputs should immediately turn Off, and the machine must not be capable of starting until power is re-applied to the EZ-SCREEN LS Basic.
17. Test the machine stopping response time, using an instrument designed for that purpose, to verify that it is the same or less than the overall system response time specified by the machine manufacturer. **Do not continue operation until the entire checkout procedure is complete and all problems are corrected.**

9 Troubleshooting

9.1 Lockout Conditions

WARNING:
- **Shut down the machinery before servicing**
- Servicing the Banner Engineering device or system while the hazardous machinery is operational could result in serious injury or death.
- The machinery to which the Banner Engineering device or system is connected must not be operating at any time during major service or maintenance. This might require lockout/tagout procedures (refer to OSHA1910.147, ANSI Z244-1, ISO 14118 or the applicable standard for controlling hazardous energy).

A Lockout condition causes all of the EZ-SCREEN LS Basic OSSD outputs to turn or remain Off, sending a stop signal to the guarded machine. Each sensor provides diagnostic error codes to assist in the identification of the cause(s) of lockouts (see Emitter Error Codes on page 60 and Receiver Error Codes on page 59)).

WARNING:
- **Lockouts and power failures indicate a problem**
- Attempts to continue to operate machinery by bypassing the Banner Engineering device or other safeguards is dangerous and could result in serious injury or death.
- A Qualified Person [6] must immediately investigate the problem.

The following tables indicate a sensor lockout condition:

Table 7: Receiver and emitter lockout conditions

Lockout Conditions	Receiver LED Behavior	Emitter LED Behavior
Run mode indicator	Off	N/A
Status indicator	Flashing red	Flashing red
Alignment indicators	Off	N/A
Diagnostic display	Error code (flashing)	Error code (flashing)

If both the emitter and its corresponding receiver do not have the same scan code setting, the receiver indicates that Beam 1 is blocked (the Diagnostic display indicating "C" "H" "1" as shown in Receiver Error Codes on page 59). This is not considered a lockout and can occur if the Scan Code input is not wired the same for both sensors or if the EDM circuit has not been re-wired for one-channel monitoring in retrofit installations of two-channel EDM applications (see the warning in the wiring section of External Device Monitoring on page 44).

9.2 Recovery Procedures

To recover from a Lockout condition, correct all errors, power the sensor down, wait a few seconds, and then power the sensor back up.

WARNING:
- **Lockouts and power failures indicate a problem**
- Attempts to continue to operate machinery by bypassing the Banner Engineering device or other safeguards is dangerous and could result in serious injury or death.
- A Qualified Person [7] must immediately investigate the problem.

[6] A person who, by possession of a recognized degree or certificate of professional training, or who, by extensive knowledge, training and experience, has successfully demonstrated the ability to solve problems relating to the subject matter and work.

[7] A person who, by possession of a recognized degree or certificate of professional training, or who, by extensive knowledge, training and experience, has successfully demonstrated the ability to solve problems relating to the subject matter and work.

WARNING:
- **Shut down the machinery before servicing**
- Servicing the Banner Engineering device or system while the hazardous machinery is operational could result in serious injury or death.
- The machinery to which the Banner Engineering device or system is connected must not be operating at any time during major service or maintenance. This might require lockout/tagout procedures (refer to OSHA1910.147, ANSI Z244-1, ISO 14118 or the applicable standard for controlling hazardous energy).

9.2.1 Receiver Error Codes

Diagnostic Display [8]	Error Description	Appropriate Action
	**Output Error** **Error is caused by:** • one or both outputs being shorted to a power supply (high or low) • by shorting OSSD 1 to OSSD 2 • by an overload (greater than 0.5 A)	• Disconnect the OSSD loads and cycle power to the receiver. • If the error clears, the problem is in the OSSD load(s) or in the load wiring. • If the error continues with no load connected, replace the receiver.
	**Receiver Error** This error can occur due to either excessive electrical noise or an internal failure.	• Cycle power, Recovery Procedures on page 58. • If the error clears, perform a Daily Checkout procedure (per EZ-SCREEN Checkout Procedures: Shift and Daily Checkout Procedure; Daily Checkout Card) and if the System checks out, resume operation. If the System fails the Daily Checkout procedure, replace the receiver. • If the error continues, check the ground connection (pin 7). • If the sensor has a good earth ground connection to pin 7, perform the Initial Checkout procedure (per Initial Checkout Procedure on page 37). • If the error clears, check the external connections and configuration settings. • If the error continues, replace the receiver.
	**Optical Noise Error** This error can occur due to excessive optical noise	• Verify alignment of emitter and receiver as described in Emitter and Receiver Orientation on page 29, Installation of Multiple Systems on page 30, and Sensor Mounting and Mechanical Alignment on page 34. • Check for crosstalk between adjacent systems and correct installation and alignment as needed • Cycle power and perform Recovery Procedures on page 58
	**Receiver Error** This error can be caused by excessive electrical noise.	• Cycle power (see Recovery Procedures on page 58). • If the error clears, perform the daily checkout procedure (per EZ-SCREEN Checkout Procedures: Shift and Daily Checkout Procedure; Daily Checkout Card) and if the System checks out, resume operation. If the System fails the Daily Checkout procedure, replace the receiver. • If the error continues, check the ground connection (pin 7). • If the sensor has a good earth ground connection to pin 7, perform the Initial Checkout procedure (Perform a Trip Test on page 40). • If the error clears, check for sources of electrical noise (see Electrical and Optical Noise on page 60). • If the error continues, replace the receiver.

[8] Multiple-digit codes are sequential, followed by a pause.

Diagnostic Display [8]	Error Description	Appropriate Action
	**EDM Error** This error can occur when the EDM input is open at power up or if the signal fails to respond within 250 ms of the OSSDs changing state (On to Off).	• Verify that the EDM wiring is correct and that the external devices meet the requirements described in Machine Primary Control Elements and EDM Input on page 43 • If the error continues, remove power to the guarded machine, disconnect the OSSD loads, disconnect the EDM input signals, configure EDM for No Monitoring (per Machine Primary Control Elements and EDM Input on page 43) and conduct the Initial Checkout procedure • If the error clears, the problem is in the External Device contacts or wiring, or is a response-time problem of the external devices. Verify that the EDM wiring is correct and that the external devices meet the requirements described in Machine Primary Control Elements and EDM Input on page 43 • If the error continues, check for noise on the EDM inputs (see Electrical and Optical Noise on page 60)

9.2.2 Emitter Error Codes

Diagnostic Display [9]	Error Description	Appropriate Action
	**Emitter Error** This error can occur if the ID Input (pin 3, Orange) is not connected to +24 V DC. Excessive electrical noise or an internal failure can also cause this error.	• Verify that the ID Input (ID_in) wiring is connected to +24 V DC. See • Cycle the power to the emitter per Recovery Procedures on page 58 • If the error clears, perform the daily checkout procedure (per EZ-SCREEN Checkout Procedures: Shift and Daily Checkout Procedure; Daily Checkout Card). If the System checks out, resume operation. If the System fails, replace the emitter • If the error continues, check the ground connection (see Cordsets on page 62) • If the sensor has a good earth ground connection, check for electrical noise (see Electrical and Optical Noise on page 60) • If the error persists, replace the emitter
	**Emitter LED Problem** This is not an error.	This indication can occur due to a potential problem with an LED and is provided as an early warning indicator

9.3 Electrical and Optical Noise

The EZ-SCREEN LS Basic is designed and manufactured to be highly resistant to electrical and optical noise and to operate reliably in industrial settings. However, serious electrical and/or optical noise may cause a random Trip. In very extreme electrical noise cases, a Lockout is possible. To minimize the effects of transitory noise, the EZ-SCREEN LS Basic dual scan technology responds to noise only if the noise is detected on multiple consecutive scans.

If random nuisance Trips or lockouts occur, check the following:

- Poor connection between the sensor and earth ground
- Optical interference from adjacent light screens or other photoelectrics
- Sensor input or output wires routed too close to noisy wiring

9.3.1 Check for Sources of Electrical Noise

It is important that the light screen sensors have a good earth ground. Without this, the System can act like an antenna and random Trips and Lockouts can occur.

All EZ-SCREEN LS Basic wiring is low voltage; running these wires alongside power wires, motor/servo wires, or other high-voltage wiring can inject noise into the EZ-SCREEN LS Basic System. It is good wiring practice (and may be required by code) to isolate EZ-SCREEN LS Basic wires from high-voltage wires.

1. Use the Banner model BT-1 Beam Tracker Alignment Aid (see Alignment Aids on page 70) to detect electrical transient spikes and surges.
2. Cover the lens of the BT-1 with electrical tape to block optical light from entering the receiver lens.
3. Press the RCV button on the BT-1 and position the Beam Tracker on the wires going to the EZ-SCREEN LS Basic or any other nearby wires.

[8] Multiple-digit codes are sequential, followed by a pause.
[9] Multiple-digit codes are sequential, followed by a pause.

4. Install proper transient suppression across the load to reduce the noise.

9.3.2 Check for Sources of Optical Noise

1. Turn off the emitter or completely block the emitter.
2. Use a Banner BT-1 Beam Tracker (see Alignment Aids on page 70) to check for light at the receiver.
3. Press the RCV button on the BT-1 and move it across the full length of the receiver's sensing window. If the BT-1's indicator lights, check for emitted light from other sources (other safety light screens, grids or points, or standard photoelectric sensors).

10 Accessories

10.1 Cordsets

Machine interface cordsets provide power to the emitter/receiver pair. Cordsets typically have yellow PVC cables and black overmolds.

A removable disconnect (RD) is required to connect directly to the sensor housing. QD connectors are used for cable-to-cable interconnections and connections to other devices.

Single-ended (to connect to the machine interface):

RDLS-8..D RD-to-flying leads is used with sensors without a 300 mm pigtail M12 QD
QDE-8..D QD-to-flying leads is used with sensors with a 8-pin 300 mm pigtail M12 QD (model ends in P8)
QDE-5..D QD-to-flying leads is used with sensors with a 5-pin 300 mm pigtail M12 QD (model ends in P5)

Double-ended

DEE2R-8..D M12 QD-to-M12 QD (female-male) is used for extending the length of cordsets and directly connects to other devices with a 8-pin M12 QD
DEE2R-5..D M12 QD-to-M12 QD (female-male) is used for extending the length of cordsets and directly connects to other devices with a 5-pin M12 QD
MQDEC-4..SS M12 QD-to-M12 QD (female-male) is used for connecting to devices that do not have earth ground on pin 5 of a 5-pin QD (In such situations, earth ground must be provided via the mounting brackets)
DELSE-81D RD-to M12 QD (male) is used to create or replace an 8-pin 300 mm pigtail M12 QD
DELSE-51D RD-to M12 QD (male) is used to create or replace a 5-pin 300 mm pigtail M12 QD

Splitter cordsets

CSB-M128..M1281 allow easy interconnection between an 8-pin receiver and 8-pin emitter, and provides a single trunk cable for the optional interchangeable ("swapable") hookup
CSB-M125..M1251 allow easy interconnection between a 5-pin receiver and 5-pin emitter, and provides a single trunk cable for the optional interchangeable ("swapable") hookup

Note: See Routing Cordsets on page 36 for maximum cordset lengths.

EZ-SCREEN LS Connection Examples

Figure 41. 300 mm Pigtail with M12 QD

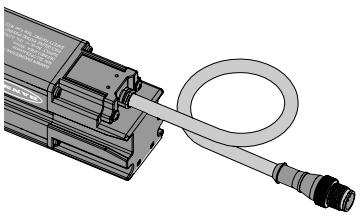

Figure 42. RD Connection with 8-Wire Flying Lead Cordset

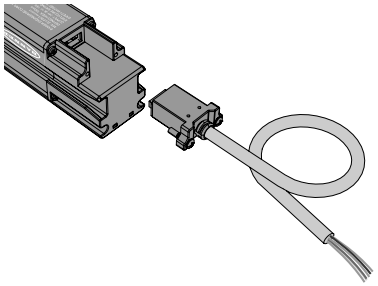

10.1.1 Single-Ended (Machine Interface) Cables

Typically you use one cordset for each emitter and receiver.

RDLS-8..D 8-wire single-ended cordsets—Use RD-to-flying lead cordsets with sensors without a 300 mm cable M12 QD			
Model	**Length**	**Pinout/Color Code**	**Product Image**
RDLS-815D	4.6 m (15.1 ft)	Brown: 24 V DC Or/Bk: Fault Orange: Emitter: ID in; Receiver: EDM White: Emitter: no connection; Receiver: OSSD2 Black: Emitter: no connection; Receiver: OSSD1 Blue: 0 V DC Gn/Ye: Ground/Chassis Violet: Scan Code	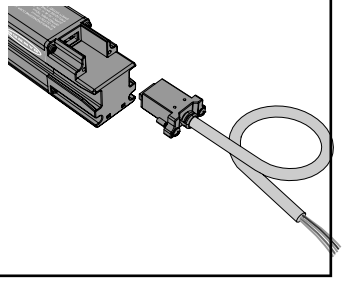
RDLS-825D	8 m (26.2 ft)		
RDLS-850D	15.3 m (50.2 ft)		

QDE-5..D 5-pin M12 QD to flying lead cordsets—Use QDE-5... cordsets with sensors that have a 300 mm cable and 5-pin M12 quick disconnect (models ending in P5). These cordsets have a M12 QD connector on one end and are unterminated (cut to length) on the other end to interface with guarded machine. PVC jacketed overmold and cables.

Model	Length	Banner Cordset Pinout/Color Code	M12 Connector (female face view)
QDE-515D	4.5 m (15 ft)	Pin 1 (Brown): 24 V DC Pin 2 (White): Emitter: no connection; Receiver: OSSD2 Pin 3 (Blue): 0 V DC Pin 4 (Black): Emitter: no connection; Receiver: OSSD1 Pin 4 (Gn/Ye): Ground/chassis	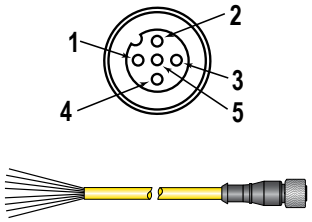
QDE-525D	7.6 m (25 ft)		
QDE-550D	15.2 m (50 ft)		
QDE-575D	22.8 m (75 ft)		
QDE-5100D	30.4 m (100 ft)		

QDE-8..D 8-pin M12 QD to flying lead cordsets—Use QDE-8... cordsets with sensors that have a 300 mm cable and 8-pin M12 quick disconnect (models ending in P8). This cordset has a M12 QD connector on one end and is unterminated (cut to length) on the other end to interface with guarded machine. PVC jacketed overmold and cables.

Model	Length	Banner Cordset Pinout/Color Code	M12 Connector (female face view)
QDE-815D	4.5 m (15 ft)	Pin 1 (Brown): 24 V DC Pin 2 (Or/Bk): Fault Pin 3 (Orange): Emitter: ID in; Receiver: EDM Pin 4 (White): Emitter: no connection; Receiver: OSSD2 Pin 5 (Black): Emitter: no connection; Receiver: OSSD1 Pin 6 (Blue): 0 V DC Pin 7 (Gn/Ye): Ground/chassis Pin 8 (Violet): Scan code	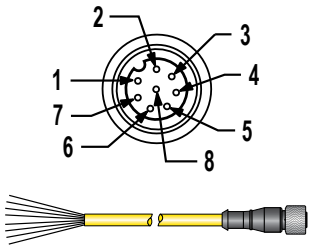
QDE-825D	7.6 m (25 ft)		
QDE-850D	15.2 m (50 ft)		
QDE-875D	22.8 m (75 ft)		
QDE-8100D	30.4 m (100 ft)		

10.1.2 Double-Ended Cordsets

DEE2R-8..D 8-pin M12 QD to M12 QD (female-male) cordsets—Use the DEE2R-8... cordsets to extend the length of cordsets and directly connect to other devices with an 8-pin M12 quick disconnect. Other lengths are available.

Model	Length	Banner Cordset Pinout/Color Code	M12 Connector (female face view)
DEE2R-81D	0.3 m (1 ft)	Pin 1 (Brown): 24 V DC Pin 2 (Or/Bk): Fault Pin 3 (Orange): Emitter: ID in; Receiver: EDM Pin 4 (White): Emitter: no connection; Receiver: OSSD2 Pin 5 (Black): Emitter: no connection; Receiver: OSSD1 Pin 6 (Blue): 0 V DC Pin 7 (Gn/Ye): Ground/Chassis Pin 8 (Violet): Scan code	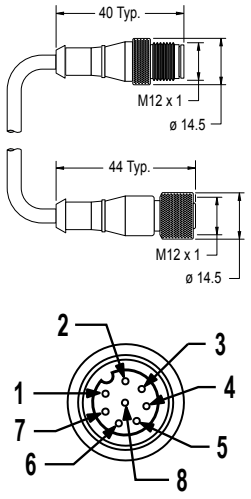
DEE2R-83D	0.9 m (3 ft)		
DEE2R-88D	2.5 m (8 ft)		
DEE2R-812D	3.6 m (12 ft)		
DEE2R-815D	4.6 m (15 ft)		
DEE2R-825D	7.6 m (25 ft)		
DEE2R-830D	9.1 m (30 ft)		
DEE2R-850D	15.2 m (50 ft)		
DEE2R-875D	22.9 m (75 ft)		
DEE2R-8100D	30.5 m (100 ft)		

DEE2R-5..D 5-pin M12 QD to M12 QD (female-male) cordsets—Use the DEE2R-5... cordsets to extend the length of cordsets and directly connect to other devices with a 5-pin M12 quick disconnect. Other lengths are available.

Model	Length	Banner Cordset Pinout/Color Code	M12 Connector (female face view)
DEE2R-51D	0.3 m (1 ft)	Pin 1 (Brown): 24 V DC Pin 2 (White): Emitter: no connection; Receiver: OSSD2 Pin 3 (Blue): 0 V DC Pin 4 (Black): Emitter: no connection; Receiver: OSSD1 Pin 5 (Gn/Ye): Ground/Chassis	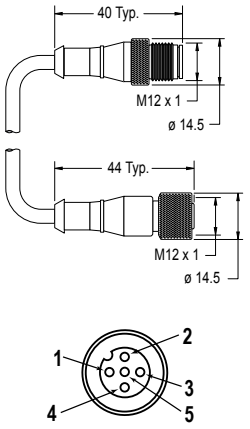
DEE2R-53D	0.9 m (3 ft)		
DEE2R-58D	2.5 m (8 ft)		
DEE2R-515D	4.6 m (15 ft)		
DEE2R-525D	7.6 m (25 ft)		
DEE2R-550D	15.2 m (50 ft)		
DEE2R-575D	22.9 m (75 ft)		
DEE2R-5100D	30.5 m (100 ft)		

MQDEC-4xxSS 4-pin M12 QD to M12 QD (female-male) cordsets—Use MQDEC-4...SS cordsets to connect to devices that do not or cannot have earth ground on pin 5 of a 5-pin QD. In such situations, earth ground must be provided via the mounting brackets. These cordsets have black PVC cables and black overmolds. The female M12 QD connector has a empty hole (no connection) in the pin 5 position to allow mating with a 5-pin male QD.

Model	Length	Banner Cordset Pinout/Color Code	M12 Connector (female face view)
MQDEC-401SS	0.3 m (1 ft)	Pin 1 (Brown): 24 V DC Pin 2 (White): Emitter: no connection; Receiver: OSSD2 Pin 3 (Blue): 0 V DC Pin 4 (Black): Emitter: no connection; Receiver: OSSD1 Pin 5 (n/a): No connection	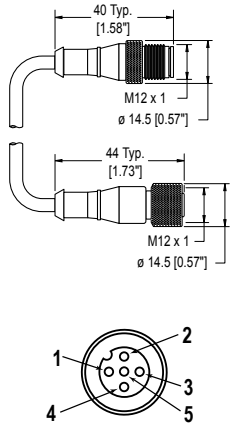
MQDEC-403SS	0.9 m (3 ft)		
MQDEC-406SS	1.8 m (6 ft)		
MQDEC-412SS	3.6 m (12 ft)		
MQDEC-420SS	6.1 m (20 ft)		
MQDEC-430SS	9.2 m (30 ft)		
MQDEC-450SS	15.2 m (50 ft)		

DELSE-..1D RD to M12 QD (male) cordsets—Use DELSE-..1D cordsets to create or replace a 300 mm pigtail M12 quick disconnect (models ending in P8 or P5).

Model	Length	Banner Cordset Pinout/Color Code	
DELSE-81D	0.3 m (1 ft)	Pin 1 (Brown): 24 V DC Pin 2 (Or/Bk): Fault Pin 3 (Orange): Emitter: ID in; Receiver: EDM Pin 4 (White): Emitter: no connection; Receiver: OSSD2 Pin 5 (Black): Emitter: no connection; Receiver: OSSD1 Pin 6 (Blue): 0 V DC Pin 7 (Gn/Ye): Ground/Chassis Pin 8 (Violet): Scan code	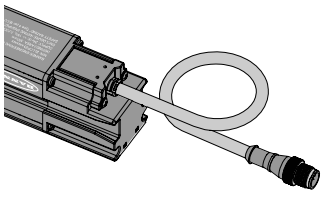

DELSE-..1D RD to M12 QD (male) cordsets—Use DELSE-..1D cordsets to create or replace a 300 mm pigtail M12 quick disconnect (models ending in P8 or P5).			
Model	**Length**	**Banner Cordset Pinout/Color Code**	
DELSE-51D	0.3 m (1 ft)	Pin 1 (Brown): 24 V DC Pin 2 (White): Emitter: no connection; Receiver: OSSD2 Pin 3 (Blue): 0 V DC Pin 4 (Black): Emitter: no connection; Receiver: OSSD1 Pin 5 (Gn/Ye): Ground/Chassis	

10.1.3 Splitter Cordsets

Model CSB splitter cordsets allow easy interconnection between an EZ-SCREEN 8-pin receiver and its 8-pin emitter, providing a single trunk cable for the optional "swapable" hookup. The model DEE2R-.. double-ended cables may be used to extend the lengths of the QD trunk, branch #1, or branch #2. Branch #1 and branch #2 cable sections are 300 mm (11.8 in) long. The model QDE-8..D single-ended cables may be used to extend the QD trunk for cut-to-length applications.

8-Pin Splitter Cordsets—Allows easy interconnection between an 8-pin receiver and 8-pin emitter, and provides a single trunk cable for the optional interchangeable ("swapable") connection.

8-Pin Threaded M12 Splitter Cordsets—Flat Junction			
Model	**Trunk (Male)**	**Branches (Female)**	**Pinout**
CSB-M1280M1280	No trunk	No branches	Male 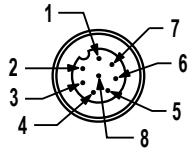 Female 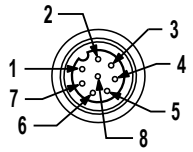 1 = Brown 2 = Or/Bk 3 = Orange 4 = White 5 = Black 6 = Blue 7 = Gn/Ye 8 = Violet
CSB-M1281M1281	0.3 m (1 ft)	2 x 0.3 m (1 ft)	
CSB-M1288M1281	2.44 m (8 ft)		
CSB-M12815M1281	4.57 m (15 ft)		
CSB-M12825M1281	7.62 m (25 ft)		
CSB-UNT825M1281	7.62 m (25 ft) Unterminated		
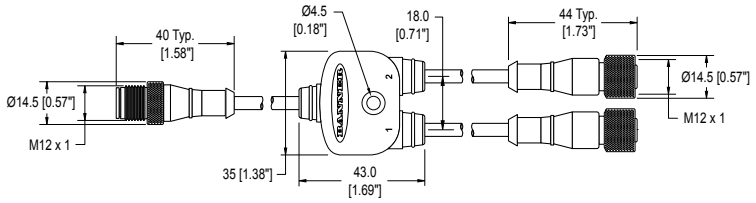 			

5-Pin Splitter Cordsets—Allows easy interconnection between an 5-pin receiver and 5-pin emitter, and provides a single trunk cable for the optional interchangeable ("swapable") connection.

5-Pin Threaded M12 Splitter Cordsets with Flat Junction—Double Ended				
Model	**Trunk (Male)**	**Branches (Female)**	**Pinout (Male)**	**Pinout (Female)**
CSB-M1251M1251	0.3 m (0.98 ft)	2 x 0.3 m (0.98 ft)	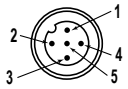	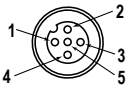
CSB-M12515M1251	4.57 m (15 ft)			
CSB-M12525M1251	7.62 m (25 ft)			
CSB-UNT525M1251	7.62 m (25 ft) Unterminated			
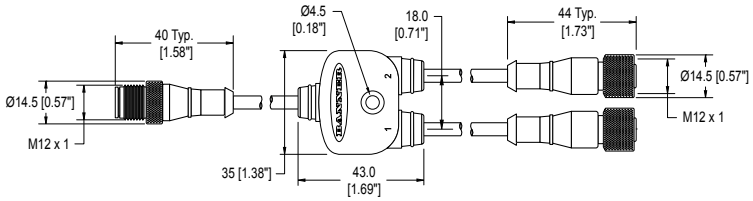			1 = Brown 2 = White 3 = Blue	4 = Black 5 = Green/Yellow

10.1.4 Bulkhead Connector

Connector for panel connection of EZ-SCREEN LS Basic component cables.

Model	Connection	Dimensions
PMEF-810D	8-pin Euro-style female connector 3 m (10 ft) wires, cut to length (Banner color code); 22 AWG/0.33 mm²	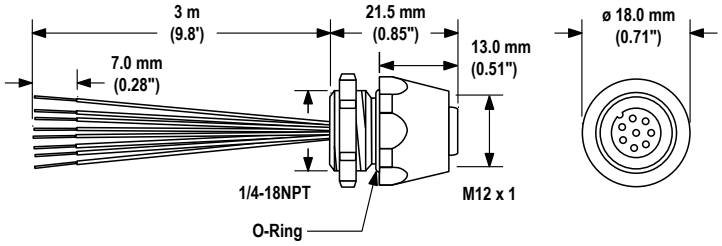

10.2 AC Interface Boxes

The AC interface box is for use with EZ-SCREEN LS Basic emitters and/or receivers. **EZAC-R..A** models can supply +24 V DC to one EZ-SCREEN LS Basic receiver or a single emitter-receiver pair. The interface box supplies +24 V DC power at 0.7 amps (16.8 W maximum power) and accepts input voltages from 100 V AC to 230 V AC (50 Hz to 60 Hz). See datasheet p/n 194317 for more information.

Model	Outputs	EDM	Emitter/Receiver Connection	AC Power Connection	Output and EDM Connections
EZAC-R9A-QE8	3 normally open (N.O.)	1-Channel or a jumper added for no EDM	8-Pin M12 QD	Hard-wired	Hard-wired
EZAC-R11A-QE8	2 normally open (N.O.) and 1 normally closed (N.C.) auxilliary				

10.3 Universal (Input) Safety Modules

UM-FA-xA Safety Modules are safety monitoring devices that provide forced-guided, mechanically-linked relay (safety) outputs for the EZ-SCREEN LS Basic system with a 5-pin interconnect (P5) or 8-pin interconnect (P8) when a manual reset (latch) is required by the application. See datasheet p/n 141249 for more information.

Model	Description
UM-FA-9A	3 normally open (N.O.) redundant-output 6 amp contacts
UM-FA-11A	2 normally open (N.O.) redundant-output 6 amp contacts, plus 1 normally closed (N.C.) auxiliary contact

10.4 Safety Controllers

Safety Controllers provide a fully configurable, software-based safety logic solution for monitoring safety and non-safety devices.

For additional models and XS26 expansion modules, see instruction manual p/n 174868 (XS/SC26-2).

Table 8: Safety controller models

Non-Expandable Models	Expandable Models	Description
SC26-2	**XS26-2**	26 convertible I/O and 2 redundant solid state safety outputs
SC26-2d	**XS26-2d**	26 convertible I/O and 2 redundant solid state safety outputs with display
SC26-2e	**XS26-2e**	26 convertible I/O and 2 redundant solid state safety outputs with Ethernet
SC26-2de	**XS26-2de**	26 convertible I/O and 2 redundant solid state safety outputs with display and Ethernet
SC10-2roe		10 inputs, 2 redundant relay safety outputs (3 contacts each) (ISD and Ethernet compatible)
	XS26-ISDd	26 inputs, 2 redundant solid state safety outputs with display, Ethernet, and 8 ISD channels

10.5 Muting Module

Provides the muting capability for the EZ-SCREEN LS Basic.

See Banner manual 116390 for more information and additional cabling options.

Model	Description	
MMD-TA-11B	DIN-mount Muting module	2 N.O. safety outputs (6 amps), 2 or 4 muting inputs, SSI, override input; IP20; terminal connections
MMD-TA-12B		2 OSSD outputs, 2 or 4 muting inputs, SSI, override input; IP20; terminal connections

10.6 Interface Modules

Interface modules provide forced-guided, mechanically-linked relay (safety) outputs for the EZ-SCREEN LS Basic System with an 8-pin interconnect (with EDM function). The interface module is required to be monitored by the EDM function and should not be used with EZ-SCREEN LS Basic with a 5-pin interconnection (P5). See the referenced Banner datasheet for more information.

Model	Description	Datasheet
IM-T-9A	Interface module, 3 normally open (N.O.) redundant-output 6 amp contacts, removable screw terminals	62822
IM-T-11A	Interface module, 2 normally open (N.O.) redundant-output 6 amp contacts, plus 1 normally closed (N.C.) auxiliary contact, removable screw terminals	
SR-IM-9A	Interface module, 3 normally open (N.O.) redundant-output 6 amp contacts, spring clamp terminals	208873
SR-IM-11A	Interface module, 2 normally open (N.O.) redundant-output 6 amp contacts, plus 1 normally closed (N.C.) auxiliary contact, spring clamp terminals	

10.7 Contactors

If used, two contactors per EZ-SCREEN LS Basic System that are monitored by the EDM circuit are required and should not be used with the EZ-SCREEN LS Basic with a 5-pin interconnection (P5) model. See Banner datasheet p/n 111881 for more information.

Model	Description
11-BG00-31-D-024	10 amp positive-guided contactor, 3 normally open (N.O.) and 1 normally closed (N.C.)
BF1801L024	18 amp positive-guided contactor, 3 normally open (N.O.) and 1 normally closed (N.C.) (N.C. contact rated at 10 amps)

10.8 Optional Mounting Brackets

EZLSA-MBK-11
- End mount brackets
- Used with emitter and receiver

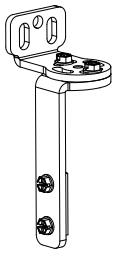

EZLSA-MBK-12
- Swivel center brackets
- Used with emitter and receiver

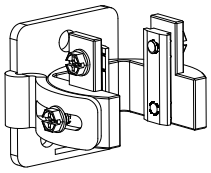

EZA-MBK-2
- Adapter bracket for mounting SSM series mirror to MSA series stands

Hole center spacing: A = 63.9, B = 19.9, A to B = 22.0
Hole size: A = ø 8.3, B = ø 4.8

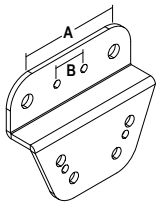

EZLSA-MBK-16
- Side-mounting bracket provides a mounting option that is full adjustable (lateral and +15/-20° rotational) from the face of the sensor and allows "no blind zone" mounting with minimal or no "gaps" in detection.
- The bracket can be mounted to a surface on the back or the side of the sensor.
- Includes one bracket and hardware. Order two or three EZLSA-MBK-16 brackets per sensor.

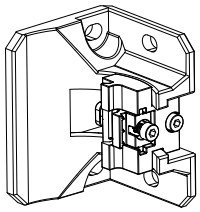

EZLSA-MBK-20
- Adapter brackets for mounting to engineered/slotted aluminum framing such as 80/20™ and Unistrut™
- Angled slots allow mounting to 20 mm to 40 mm dual channel and center slot; allows mounting to single channel framing
- Used to replace the flange bracket of the EZLSA-MBK-11 (ordered separately)
- Order one EZLSA-MBK-11 and one EZLSA-MBK-20 per sensor, two per pair

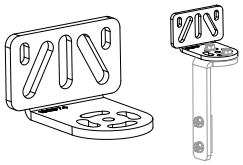

EZLSA-MBK-20 Dimensions

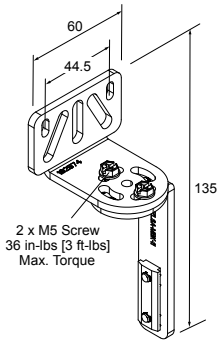

10.8.1 Installing the Side Mount Brackets

The following installation guide describes how to mount the EZLSA-MBK-16 side-mount brackets. See EZLSA-MBK-16 Side-Mount Bracket on page 33 for more information.

1 **Adjust clamp screw to loosen or tighten clamp.**

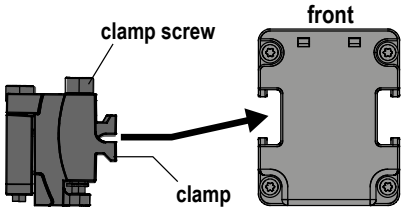

2 **Slide inner bracket assembly into outer bracket groove.**

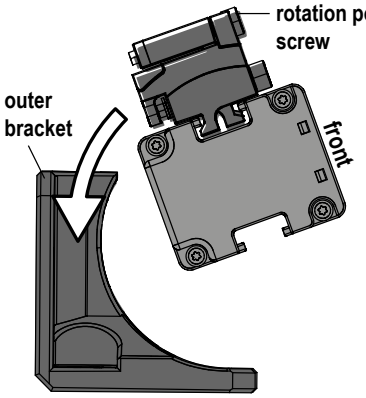

(Depending on your configuration, it may be helpful to mount the outer bracket to the mount surface first before Step 2 process)

3 **With the light screen aligned, tighten rotation position screw to complete installation.**

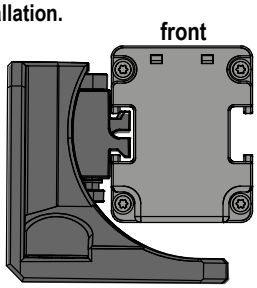

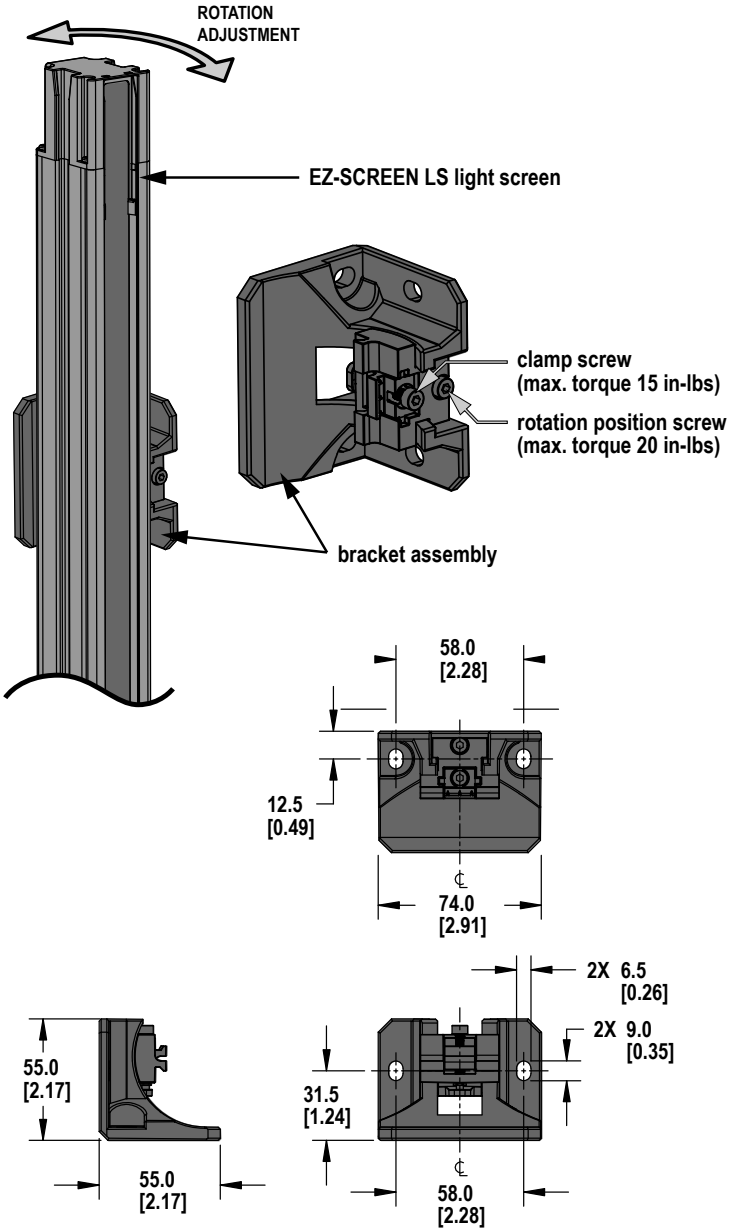

10.9 Alignment Aids

Model	Description	
LAT-1-SS	Self-contained visible-beam laser tool for aligning any EZ-SCREEN LS Basic emitter/receiver pair. Includes retroreflective target material and mounting clip.	
EZA-LAT-SS	Replacement adaptor (clip) hardware for EZ-SCREEN LS Basic models	
EZA-LAT-2	Clip-on retroreflective LAT target	
BRT-THG-2-100	2 inch retroreflective tape, 100 ft	
BT-1	Beam Tracker	

10.10 Snap-On Lens Shields

Impact-resistant copolyester lens shields snap easily over entire length of sensor housing, protecting against direct contact with fluids and solid debris. The lens shields are not sealed at top and bottom, and decrease sensing range by approximately 20% when they are protecting both the emitter and receiver. Order one per sensor.

Sensor Model	Lens Shield Model	Sensor Model	Lens Shield Model	
SLL..-350..	EZLS-350	SLL..-1190..	EZLS-1190	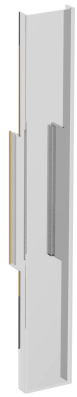
SLL..-420..	EZLS-420	SLL..-1260..	EZLS-1260	
SLL..-630..	EZLS-630	SLL..-1330..	EZLS-1330	
SLL..-910..	EZLS-910	SLL..-1540..	EZLS-1540	
SLL..-1050..	EZLS-1050	SLL..-1820..	EZLS-1820	

10.11 Tubular Enclosures

The tubular enclosures include stainless mounting brackets and hardware and are:

- Ideal for high-pressure wash-down environments
- Made of clear FDA-grade polycarbonate tubing with acetal end caps
- Rated IEC IP67/IP69K

Using enclosures affects the sensing range of the emitter/receiver used: when in pairs, the range can be reduced by 30%. The EZA-MBK-2 adapter bracket is required for use with the MSA Series stand, see MSA Series Stands on page 75.

Sensor Model	Tubular Enclosure Model	Sensor Model	Tubular Enclosure Model	
SLL..-350..	EZLSA-TE-350	SLL..-1190..	EZLSA-TE-1190	
SLL..-420..	EZLSA-TE-420	SLL..-1260..	EZLSA-TE-1260	
SLL..-630..	EZLSA-TE-630	SLL..-1330..	EZLSA-TE-1330	
SLL..-910..	EZLSA-TE-910	SLL..-1540..	EZLSA-TE-1540	
SLL..-1050..	EZLSA-TE-1050	SLL..-1820..	EZLSA-TE-1820	

10.12 EZ-LIGHTS® for EZ-SCREEN®

Provides clear, 360° indication of the of the EZ-SCREEN receiver's output status and receiver lockouts. EZ-LIGHT or other means of indication must draw less than 100 mA at 24 V dc.

Figure 43. EZ-SCREEN with M18 EZ-LIGHT



Standard Receivers (SLLR..-….P8)—Use with a CSB-M128..M1281 splitter cable and optional DEE2R-8..D double-ended cables. Use only EZ-LIGHT models with the suffix "8PQ8" when connecting to the machine interface connection. See datasheet p/n 121901 for more information.			
Models		**Construction**	**Connector/LED Function/Inputs**
	**M18RGX8PQ8** [10]	Nickel-plated brass housing, M18 × 1 thread; thermoplastic lens Fully encapsulated IP67	8-pin M12/Euro-style Integral QD Red/green indication follows OSSD output of the EZ-SCREEN receiver **Red ON**: Power ON, Beam Blocked, or Lockout **Green ON**: Power ON or Beam Clear
	**T18RGX8PQ8**	Thermoplastic polyester housing, thermoplastic lens Fully encapsulated IP67	
	**T30RGX8PQ8**		

[10] Available in a kit that includes one M18 EZ-LIGHT, one SMB18A mounting bracket, and hardware for mounting to the side channel of an EZ-SCREEN housing (kit model number **EZA-M18RGX8PQ8)**.

Standard Receivers (SLLR..-….P8)—Use with a CSB-M128..M1281 splitter cable and optional DEE2R-8..D double-ended cables. Use only EZ-LIGHT models with the suffix "8PQ8" when connecting to the machine interface connection. See datasheet p/n 121901 for more information.			
Models		**Construction**	**Connector/LED Function/Inputs**
	**K30LRGX8PQ8**	Polycarbonate housing, 30 mm thermoplastic dome, 22 mm base mount Fully encapsulated, IP67	
	**K50LRGX8PQ8**	Polycarbonate housing, 50 mm thermoplastic dome, 30 mm base mount Fully encapsulated, IP67	
	**K80LRGX8PQ8**	Polycarbonate housing, 50 mm thermoplastic dome, flat or DIN mount Encapsulated electronics, IP67	

10.13 MSM Series Corner Mirrors

- Compact for light-duty applications
- Rear-surface glass mirrors are rated at 85% efficiency. The total sensing range decreases by approximately 8% per mirror. See the MSM Series Corner Mirror datasheet (p/n 43685) or http://www.bannerengineering.com for further information.
- Mounting brackets may be inverted from the positions shown (flanges pointing "inward" instead of "outward," as shown). When this is done, dimension L1 decreases by 57 mm.
- MSAMB adapter bracket kit included with each MSA stand.

Mirror Model	Part Number	Reflective Area Length (Y)	Mounting Length (L1)	Mirror Height Overall (L2)	
MSM4A	43162	165 mm (6.5 in)	221 mm (8.7 in)	191 mm (7.5 in)	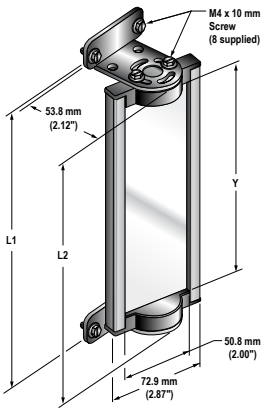
MSM8A	43163	267 mm (10.5 in)	323 mm (12.7 in)	292 mm (11.5 in)	
MSM12A	43164	356 mm (14 in)	411 mm (16.2 in)	381 mm (15 in)	
MSM16A	43165	457 mm (18 in)	513 mm (20.2 in)	483 mm (19 in)	
MSM20A	43166	559 mm (22 in)	615 mm (24.2 in)	584 mm (23 in)	
MSM24A	43167	660 mm (26 in)	716 mm (28.2 in)	686 mm (27 in)	
MSM28A	43168	762 mm (30 in)	818 mm (32.2 in)	787 mm (31 in)	
MSM32A	43169	864 mm (34 in)	919 mm (36.2 in)	889 mm (35 in)	
MSM36A	43170	965 mm (38 in)	1021 mm (40.2 in)	991 mm (39 in)	
MSM40A	43171	1067 mm (42 in)	1123 mm (44.2 in)	1092 mm (43 in)	
MSM44A	43172	1168 mm (46 in)	1224 mm (48.2 in)	1194 mm (47 in)	
MSM48A	43173	1270 mm (50 in)	1326 mm (52.2 in)	1295 mm (51 in)	

MSM Model	EZ-SCREEN Models			
	SLS Defined Area	**LP Defined Area**	**LS Defined Area**	**Type 2 Defined Area**
MSM4A				
MSM8A	150			150
MSM12A	300	270	280	300

MSM Model	EZ-SCREEN Models			
	SLS Defined Area	LP Defined Area	LS Defined Area	Type 2 Defined Area
MSM16A		410	350	
MSM20A	450		490	450
MSM24A	600	550	560	600
MSM28A		690	630/700	
MSM32A	750		770	750
MSM36A	900	830	840/910	900
MSM40A		970	980	
MSM44A	1050	1110	1050/1120	1050
MSM48A	1200		1190	1200

10.14 SSM Series Corner Mirrors

- Robust for heavy-duty applications
- Extra wide for use with long-range optical safety systems
- Rear-surface glass mirrors are rated at 85% efficiency. The total sensing range decreases by approximately 8% per mirror. See mirror datasheet p/n 61934 or www.bannerengineering.com for further information.
- To order the stainless steel reflective surface models, add the suffix **-S** (for example, **SSM-375-S**); range reduction for these models is approximately 30% per mirror. See datasheet p/n 67200.
- Robust construction, two mounting brackets and hardware included.
- In addition to the included SMA-MBK-1 brackets, an EZA-MBK-2 adapter bracket kit is required for use with MSA Series stands; refer to the mounting bracket accessories list.
- Brackets may be inverted from the positions shown, decreasing dimension L1 by 58 mm (2.3 in).

Mirror Model	Reflective Area Height (Y)	Mounting Height (L1) [11]	Overall Height (L2)	
SSM-100-S	100 mm (3.9 in)	211 mm (8.3 in)	178 mm (7.0 in)	
SSM-150-S	150 mm (5.9 in)	261 mm (10.3 in)	228 mm (9.0 in)	
SSM-200-S	200 mm (7.9 in)	311 mm (12.2 in)	278 mm (10.9 in)	
SSM-250-S	250 mm (9.8 in)	361 mm (14.2 in)	328 mm (12.9 in)	
SSM-375-S	375 mm (14.8 in)	486 mm (19.1 in)	453 mm (17.8 in)	
SSM-475-S	475 mm (18.7 in)	586 mm (23.1 in)	553 mm (21.8 in)	
SSM-550-S	550 mm (21.7 in)	661 mm (26.0 in)	628 mm (24.7 in)	
SSM-675-S	675 mm (26.6 in)	786 mm (31.0 in)	753 mm (29.6 in)	
SSM-825-S	825 mm (32.5 in)	936 mm (36.9 in)	903 mm (35.6 in)	
SSM-875-S	875 mm (34.4 in)	986 mm (38.8 in)	953 mm (37.5 in)	
SSM-975-S	975 mm (38.4 in)	1086 mm (42.8 in)	1053 mm (41.5 in)	
SSM-1100-S	1100 mm (43.3 in)	1211 mm (47.7 in)	1178 mm (46.4 in)	
SSM-1175-S	1175 mm (46.3 in)	1286 mm (50.6 in)	1253 mm (49.3 in)	
SSM-1275-S	1275 mm (46.3 in)	1386 mm (54.6 in)	1353 mm (53.3 in)	
SSM-1400-S	1400 mm (55.1 in)	1511 mm (59.5 in)	1478 mm (58.2 in)	
SSM-1475-S	1475 mm (58.1 in)	1586 mm (62.5 in)	1553 mm (61.1 in)	
SSM-1550-S	1550 mm (61.0 in)	1661 mm (65.4 in)	1628 mm (64.1 in)	

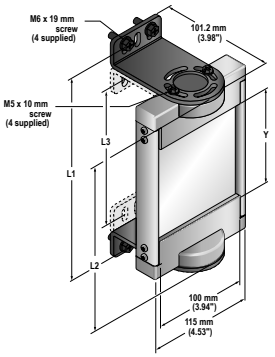

[11] The mounting brackets may be inverted from the positions shown at left (flanges pointing “inward” instead of “outward,” as shown). When this is done, dimension L1 decreases by 58 mm (2.3 in).

Mirror Model	Reflective Area Height (Y)	Mounting Height (L1) [11]	Overall Height (L2)	
SSM-1675-S	1675 mm (65.9 in)	1786 mm (70.3 in)	1753 mm (69.0 in)	
SSM-1750-S	1750 mm (68.9 in)	1861 mm (73.3 in)	1828 mm (72.0 in)	
SSM-1900-S	1900 mm (74.8 in)	2011 mm (79.2 in)	1978 mm (77.9 in)	

SSM Models	EZ-SCREEN Models				
	SLS	LP	LS	Type 2	SGS
SSM-100					
SSM-150					
SSM-200	150			150	
SSM-250					
SSM-375	300	270	280	300	
SSM-475		410	350/420		
SSM-550	450		490	450	2-500
SSM-675	600	550	560/630	600	
SSM-825	750	690	700/770	750	
SSM-875		830	840		3-400
SSM-975	900		910	900	4-300
SSM-1100	1050	970	980/1050	1050	
SSM-1175		1110	1120		
SSM-1275	1200		1190	1200	4-400
SSM-1400	1350	1250	1260/1330	1350	
SSM-1475		1390	1400		
SSM-1550	1500		1470	1500	
SSM-1675		1530	1540/1610		
SSM-1750	1650	1670	1680	1650	
SSM-1900	1800	1810	1750/1820	1800	

10.15 MSA Series Stands

- Provides mounting T-slots with 20 mm dimension between slots
- Base included. Available without a base by adding the suffix **NB** to the model number (for example, **MSA-S42-1NB**).

[11] The mounting brackets may be inverted from the positions shown at left (flanges pointing “inward” instead of “outward,” as shown). When this is done, dimension L1 decreases by 58 mm (2.3 in).

Stand Model	Pole Height	Useable Stand Height	Overall Stand Height	
MSA-S24-1	610 mm (24 in)	483 mm (19 in)	616 mm (24.25 in)	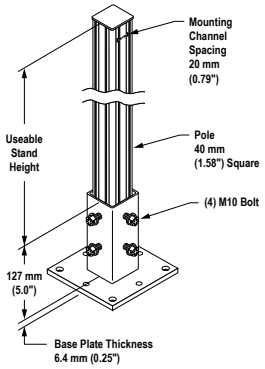
MSA-S42-1	1067 mm (42 in)	940 mm (37 in)	1073 mm (42.25 in)	
MSA-S66-1	1676 mm (66 in)	1550 mm (61 in)	1682 mm (66.25 in)	
MSA-S84-1	2134 mm (84 in)	2007 mm (79 in)	2140 mm (84.25 in)	
MSA-S105-1	2667 mm (105 in)	2667 mm (100 in)	2673 mm (105.25 in)	

11 Product Support and Maintenance

11.1 Cleaning

Components are best cleaned using mild detergent or window cleaner and a soft cloth. Avoid cleaners containing alcohol, as they may damage the acrylic lens covers.

11.2 Warranty Service

Contact Banner Engineering for troubleshooting of this device. **Do not attempt any repairs to this Banner device; it contains no field-replaceable parts or components.** If the device, device part, or device component is determined to be defective by a Banner Applications Engineer, they will advise you of Banner's RMA (Return Merchandise Authorization) procedure.



Important: If instructed to return the device, pack it with care. Damage that occurs in return shipping is not covered by warranty.

11.3 Manufacturing Date

Every EZ-SCREEN LS Basic produced is marked with a code that defines the week and year of manufacture and manufacturing location. The code format (U.S. Standard format) is: **YYWWL**

- YY = Year of manufacture, 2 digits
- WW = Week of manufacture, 2 digits
- L = Banner-specific code, 1 digit

Example: 1809H = 2018, Week 9.

11.4 Replacement Parts

Model	Description
STP-19	23 mm test piece (23 mm resolution systems)
SMA-MBK-1	SSM mirror bracket kit. Includes 2 replacement brackets for one mirror
204120	EZ-SCREEN LS Basic Instruction Manual

11.5 Disposal

Devices that are no longer in use should be disposed of according to the applicable national and local regulations.

11.6 Contact Us

Banner Engineering Corp. headquarters is located at:

9714 Tenth Avenue North
Minneapolis, MN 55441, USA
Phone: + 1 888 373 6767

For worldwide locations and local representatives, visit www.bannerengineering.com.

11.7 Banner Engineering Corp Limited Warranty

Banner Engineering Corp. warrants its products to be free from defects in material and workmanship for one year following the date of shipment. Banner Engineering Corp. will repair or replace, free of charge, any product of its manufacture which, at the time it is returned to the factory, is found to have been defective during the warranty period. This warranty does not cover damage or liability for misuse, abuse, or the improper application or installation of the Banner product.

THIS LIMITED WARRANTY IS EXCLUSIVE AND IN LIEU OF ALL OTHER WARRANTIES WHETHER EXPRESS OR IMPLIED (INCLUDING, WITHOUT LIMITATION, ANY WARRANTY OF MERCHANTABILITY OR FITNESS FOR A PARTICULAR PURPOSE), AND WHETHER ARISING UNDER COURSE OF PERFORMANCE, COURSE OF DEALING OR TRADE USAGE.

This Warranty is exclusive and limited to repair or, at the discretion of Banner Engineering Corp., replacement. **IN NO EVENT SHALL BANNER ENGINEERING CORP. BE LIABLE TO BUYER OR ANY OTHER PERSON OR ENTITY FOR ANY EXTRA COSTS, EXPENSES, LOSSES, LOSS OF PROFITS, OR ANY INCIDENTAL, CONSEQUENTIAL OR SPECIAL DAMAGES RESULTING FROM ANY PRODUCT DEFECT OR FROM THE USE OR INABILITY TO USE THE PRODUCT, WHETHER ARISING IN CONTRACT OR WARRANTY, STATUTE, TORT, STRICT LIABILITY, NEGLIGENCE, OR OTHERWISE.**

Banner Engineering Corp. reserves the right to change, modify or improve the design of the product without assuming any obligations or liabilities relating to any product previously manufactured by Banner Engineering Corp. Any misuse, abuse, or improper application or installation of this product or use of the product for personal protection applications when the product is identified as not intended for such purposes will void the product warranty. Any modifications to this product without prior express approval by Banner Engineering Corp will void the product warranties. All specifications published in this document are subject to change; Banner reserves the right to modify product specifications or update documentation at any time. Specifications and product information in English supersede that which is provided in any other language. For the most recent version of any documentation, refer to: www.bannerengineering.com.

For patent information, see www.bannerengineering.com/patents.

12 Glossary

A

ANSI (American National Standards Institute)

Acronym for the American National Standards Institute, an association of industry representatives that develops technical standards (including safety standards). These standards comprise a consensus from a variety of industries on good practice and design. ANSI standards relevant to application of safety products include the ANSI B11 Series, and ANSI/RIA R15.06. See .

Auto Power-Up

A safety light curtain system feature that enables the system to be powered up into Run mode (or recover from a power interruption) without requiring a manual reset.

Auto Start/Restart (Trip) Condition

The safety outputs of a safety light curtain system turn off when an object completely blocks a beam. In an Auto Start/Restart condition, the safety outputs re-energize when the object is removed from the defined area.

Auto Start/Restart (Trip) Initiate

The resetting of a safeguard causing the initiation of machine motion or operation. Auto Start/Restart Initiate is not allowed as a means to initiate a machine cycle per NFPA 79 and ISO 60204-1, and is commonly confused with PSDI.

B

Blanking

A programmable feature of a safety light curtain system which allows the light curtain to ignore certain objects located within the defined area. See **Floating Blanking** and **Reduced Resolution**.

Blocked Condition

A condition that occurs when an opaque object of sufficient size blocks/interrupts one or more light curtain beams. When a blocked condition occurs, OSSD1 and OSSD2 outputs simultaneously turn off within the system response time.

Brake

A mechanism for stopping, slowing, or preventing motion.

C

Cascade

Series connection (or "daisy-chaining") of multiple emitters and receivers.

CE

Abbreviation for "Conformité Européenne" (French translation of "European Conformity"). The CE mark on a product or machine establishes its compliance with all relevant European Union (EU) Directives and the associated safety standards.

Clutch

A mechanism that, when engaged, transmits torque to impart motion from a driving member to a driven member.

Control Reliability

A method of ensuring the performance integrity of a control system or device. Control circuits are designed and constructed so that a single failure or fault within the system does not prevent the normal stopping action from being applied to the machine when required, or does not create unintended machine action, but does prevent initiation of successive machine action until the failure is corrected.

CSA

Abbreviation for Canadian Standards Association, a testing agency similar to Underwriters Laboratories, Inc. (UL) in the United States. A CSA-certified product has been type-tested and approved by the Canadian Standards Association as meeting electrical and safety codes.

D

Defined Area

The "screen of light" generated by a safety light curtain system, defined by the height and the safety distance (minimum distance) of the system.

Designated Person

A person or persons identified and designated in writing, by the employer, as being appropriately trained and qualified to perform a specified checkout procedure.

E

Emitter

The light-emitting component of a safety light curtain system, consisting of a row of synchronized modulated LEDs. The emitter, together with the receiver (placed opposite), creates a "screen of light" called the defined area.

External Device Monitoring (EDM)

A means by which a safety device (such as a safety light curtain) actively monitors the state (or status) of external devices that may be controlled by the safety device. A lockout of the safety device will result if an unsafe state is detected in the external device. External device(s) may include, but are not limited to: MPCEs, captive contact relays/contactors, and safety modules.

F

Failure to Danger

A failure which delays or prevents a machine safety system from arresting dangerous machine motion, thereby increasing risk to personnel.

Final Switching Device (FSD)

The component of the machine's safety-related control system that interrupts the circuit to the machine primary control element (MPCE) when the output signal switching device (OSSD) goes to the OFF-state.

FMEA (Failure Mode and Effects Analysis)

A testing procedure by which potential failure modes in a system are analyzed to determine their results or effects on the system. Component failure modes that produce either no effect or a Lockout condition are permitted; failures which cause an unsafe condition (a failure to danger) are not. Banner safety products are extensively FMEA tested.

G

Guarded Machine

The machine whose point of operation is guarded by the safety system.

H

Hard (Fixed) Guard

Screens, bars, or other mechanical barriers affixed to the frame of the machine intended to prevent entry by personnel into the hazardous area(s) of a machine, while allowing the point of operation to be viewed. The maximum size of the openings is determined by the applicable standard, such as Table O-10 of OSHA 29CFR1910.217, also called a "fixed barrier guard."

Harm

Physical injury or damage to the health of people, which may result through direct interaction with the machine or through indirect means, as a result of damage to property or to the environment.

Hazard Point

The closest reachable point of the hazardous area.

Hazardous Area

An area that poses an immediate or impending physical hazard.

I

Internal Lockout

A Lockout condition that is due to an internal safety system problem. Generally, indicated by the red Status indicator LED (only) flashing. Requires the attention of a Qualified Person.

K

Key Reset (Manual Reset)

A key-operated switch used to reset a safety light screen system to RUN mode following a Lockout condition. Also refers to the act of using the switch.

L

Lockout Condition

A safety light curtain condition that is automatically attained in response to certain failure signals (an internal lockout). When a Lockout condition occurs, the safety light curtain's safety outputs turn OFF; the failure must be corrected and a manual reset is required to return the system to Run mode.

M

Machine Primary Control Element (MPCE)

An electrically powered element, external to the safety system, which directly controls the machine's normal operating motion in such a way that the element is last (in time) to operate when machine motion is either initiated or arrested.

Machine Response Time

The time between the activation of a machine stopping device and the instant when the dangerous parts of the machine reach a safe state by being brought to rest.

Manual Start/Restart (Latch) Condition

The safety outputs of a safety light curtain system turn off when an object completely blocks a beam. In a Manual Start/Restart condition, the safety outputs stay off when the object is removed from the defined area. To re-energize the outputs, perform a proper manual reset.

Minimum Object Sensitivity (MOS)

The minimum-diameter object that a safety light curtain system can reliably detect. Objects of this diameter or greater will be detected anywhere in the defined area. A smaller object can pass undetected through the light if it passes exactly midway between two adjacent light beams. Also known as MODS (Minimum Object Detection Size). See also **Specified Test Piece**.

Muting

The automatic suspension of the safeguarding function of a safety device during a non-hazardous portion of the machine cycle.

O

OFF State

The state in which the output circuit is interrupted and does not permit the flow of current.

ON State

The state in which the output circuit is complete and permits the flow of current.

OSHA (Occupational Safety and Health Administration)

A U.S. Federal agency, Division of the U.S. Department of Labor, that is responsible for the regulation of workplace safety.

OSSD

Output Signal Switching Device. The safety outputs that are used to initiate a stop signal.

P

Part-Revolution Clutch

A type of clutch that may be engaged or disengaged during the machine cycle. Part-revolution clutched machines use a clutch/brake mechanism, which can arrest machine motion at any point in the stroke or cycle.

Pass-Through Hazard

A pass-through hazard is associated with applications where personnel may pass through a safeguard (which issues a stop command to remove the hazard), and then continues into the guarded area, such as in perimeter guarding. Subsequently, their presence is no longer detected, and the related danger becomes the unexpected start or restart of the machine while personnel are within the guarded area.

Point of Operation

The location of a machine where material or a workpiece is positioned and a machine function is performed upon it.

PSDI (Presence-Sensing Device Initiation)

An application in which a presence-sensing device is used to actually start the cycle of a machine. In a typical situation, an operator manually positions a part in the machine for the operation. When the operator moves out of the danger area, the presence sensing device starts the machine (no start switch is used). The machine cycle runs to completion, and the operator can then insert a new part and start another cycle. The presence sensing device continually guards the machine. Single-break mode is used when the part is automatically ejected after the machine operation. Double-break mode is used when the part is both inserted (to begin the operation) and removed (after the operation) by the operator. PSDI is commonly confused with "Trip Initiate." PSDI is defined in OSHA CFR1910.217. Banner safety light curtain systems may not be used as PSDI devices on mechanical power presses, per OSHA regulation 29 CFR 1910.217.

Q

Qualified Person

A person who, by possession of a recognized degree or certificate of professional training, or who, by extensive knowledge, training and experience, has successfully demonstrated the ability to solve problems relating to the subject matter and work.

R

Receiver

The light-receiving component of a safety light curtain system, consisting of a row of synchronized phototransistors. The receiver, together with the emitter (placed opposite), creates a "screen of light" called the defined area.

Reset

The use of a manually operated switch to restore the safety outputs to the On state from a lockout condition.

Resolution

See **Minimum Object Sensitivity**.

S

Self-Checking (Circuitry)

A circuit with the capability to electronically verify that all of its own critical circuit components, along with their redundant backups, are operating properly. Banner safety light curtain systems and safety modules are self-checking.

Safety Distance

The minimum distance required to allow the machine's hazardous motion to stop completely, before a hand (or other object) can reach the nearest hazard point. Measured from the midpoint of the defined area to the nearest hazard point. Factors that influence minimum separation distance include the machine stop time, the light curtain system response time, and the light curtain minimum object detection size.

Specified Test Piece

An opaque object of sufficient size used to block a light beam to test the operation of a safety light curtain system. When inserted into the defined area and placed in front of a beam, the test piece causes the outputs to de-energize.

Supplemental Guarding

Additional safeguarding device(s) or hard guarding, used to prevent a person from reaching over, under, through or around the primary safeguard or otherwise accessing the guarded hazard.

T

Test Piece

An opaque object of sufficient size used to block a light beam to test the operation of a safety light curtain system.

U

UL (Underwriters Laboratory)

A third-party organization that tests products for compliance with appropriate standards, electrical codes, and safety codes. Compliance is indicated by the UL listing mark on the product.

Index

A

accessories
    MSM corner mirrors 73
    muting module 67
    safety controller 67
    safety modules 66
alignment
    mechanical 34

C

calculating safety distance 21
checkout
    initial 37, 38, 40
    periodic 54
    schedule of 56
control reliability 10
corner mirrors 28
crosstalk 30

D

distance
    minimum 21
dual-channel control 43

E

emitter orientation 29

F

final switching devices 42, 43
FSD 42, 43

H

hazards
    reducing 24

I

installation
    mechanical 21, 22, 24–26, 28–34

M

minimum distance 21
mirrors
    optical alignment 40
MSM corner mirrors
    accessories 73
multiple systems 30
muting module
    accessories 67

O

optical alignment with mirrors 40
orientation 29

P

protective stop circuit 43

R

receiver orientation 29

S

safety controller 67
safety distance 21
safety modules
    accessories 66
safety stop circuit 43
scan code 30
single-channel control 43
supplemental safeguarding 24