MODEL NO.	"L"	"TL"	P/N
PBE46UTMLLPHTI	2000 [79]	1829 [72]	51830

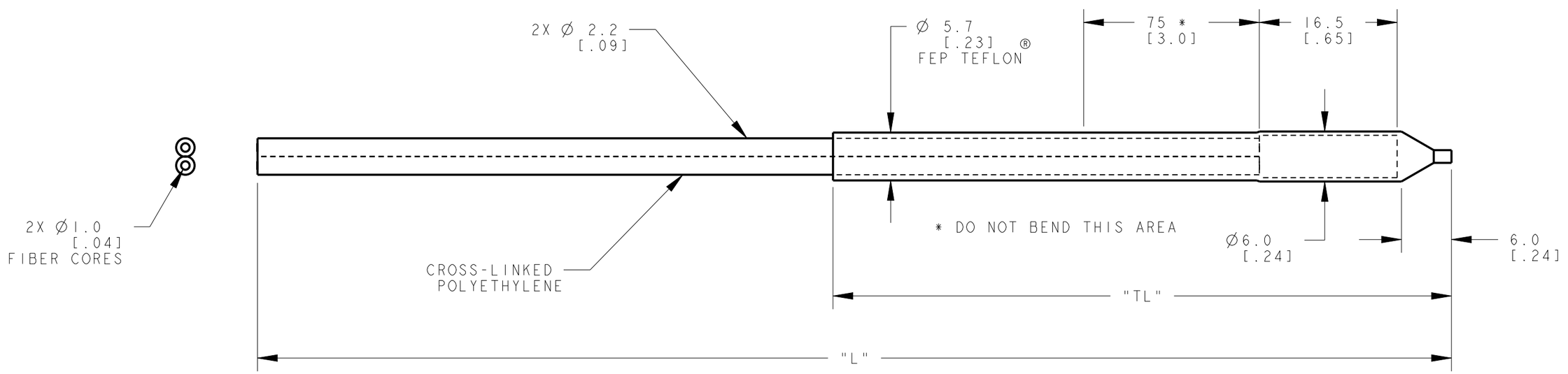

NOTES:
1. ALL DIMENSIONS ARE IN MILLIMETERS [INCHES] UNLESS OTHERWISE NOTED.
2. REFER TO "www.bannerengineering.com" FOR ADDITIONAL DATA AND SPECIFICATIONS.
3. THE MAXIMUM OPERATING TEMPERATURE OF THIS CABLE IS 105°C [221°F]

This drawing is the property of BANNER ENGINEERING CORP. Any use or reproduction, in any form, without prior written permission of Banner is prohibited.
© 2015 Banner Engineering Corp.

THIRD ANGLE PROJECTION

BANNER ENGINEERING CORP.
www.bannerengineering.com

TITLE

PBE4 SERIES TEFLON ENCAPSULATED UNTERMINATED

SIZE	DRAWING NO.	REV.
B	166403	A
SCALE 2:1		SHEET 1 OF 1

CREO

ПРОМЭЛЕКТРОНИКА/ sales@prom-elec.com