LED..SM Series Spot Lights

LED Spot Lights for Use with PresencePLUS® P4 Sensors

For the latest technical information about this product, including specifications, dimensions, and wiring, see *www.BannerEngineering.com*.

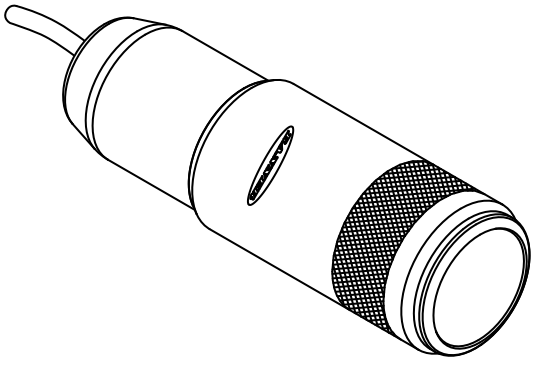

- Low-cost, compact washdown spot lights for *Presence*PLUS® sensors. See Banner's Web site (*www.bannerengineering.com*) for a complete lighting tutorial.
- Continuous or strobed operation is selectable via sensor software.
- Solid-state LED; adjustable spot size (see *Specifications* on page 1).
- Direct connection to *Presence*PLUS P4
- Standard 1/4 - 20 thread mounting hole, compatible with camera mounting bracket knuckle.

Models

Model	Color	Ambient Light Filter Kit
LEDRSM	Visible Red, 620-630 nm	FLTR
LEDWSM	Cool White, 5500-8300 K	FLTB or FLTG
LEDBSM	Blue, 465-485 nm	FLTB
LEDGSM	Green, 520-535 nm	FLTG

Specifications

Light Source
LED; see Models table for wavelengths

Illumination
High-intensity spot light

Supply Voltage and Current
Voltage supplied by *Presence*PLUS sensor: 10-30V dc @360mA max.

Connections
2 m (6.5') attached pigtail with 3-wire, 8 mm Pico-style connector

Construction
Black anodized aluminum, glass lens

Environmental Rating
IEC IP67

Useful Life
50,000 hours (LED ON time). When operated within specification, output will decrease less than 30% after 50,000 hours.

Operating Conditions
-40° to +50° C (-40° to +122° F)
90% @ 50° C (non-condensing) max. rel. humidity

Cleaning Instructions
Regularly remove any dust, dirt, or fingerprints from the light source.

1. Blow off dust using anti-static compressed air.
2. If necessary, use a lens cloth and lens cleaner or window cleaner to wipe off remaining debris. Do not use any other chemicals for cleaning.

Spot Size Relative to Distance				
Distance	**152 mm (6")**		**305 mm (12")**	
Spot Size	76.2 mm (3") min.	178 mm (7") max.	127 mm (5") min.	305 mm (12") max.

P/N 122986 rev. C 2/25/2011

ПРОМЭЛЕКТРОНИКА/ sales@prom-elec.com

Dimensions

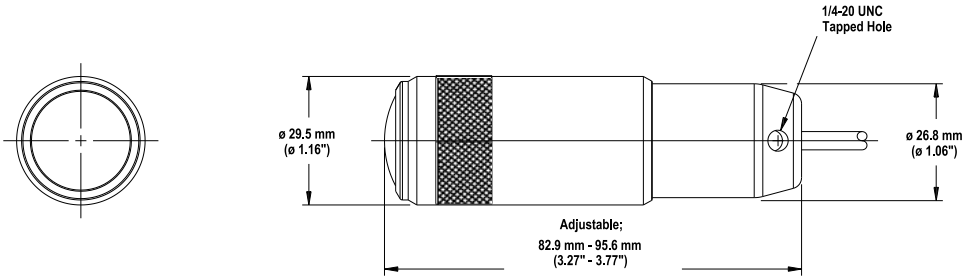

Installing the Spot Light

NOTE: Before installing this spot light, install an ambient light filter behind the sensor lens. The filter improves image quality by reducing unwanted ambient light.

Sensing Shiny Surfaces: To eliminate direct reflections without using polarizing filters, angle the light approximately 15° (or more) from perpendicular to a shiny surface.

Accessory Mounting Brackets

Spot light's standard 1/4 - 20 thread mounting hole is compatible with camera mounting bracket knuckle.

Model	Description
SMBPPK3	3" Column, Base, and Knuckle Kit
SMBPPK6	6" Column, Base, and Knuckle Kit
SMBPPK	Mounting Bracket Knuckle
SMBPPKB	Mounting Bracket Base

Model	Description
SMBPPKE3	Mounting Bracket Knuckle 3" Extension
SMBPPKE6	Mounting Bracket Knuckle 6" Extension
SMBPPLK	2" Mounting Knuckle Assembly

BANNER®
more sensors, more solutions

Warranty: Banner Engineering Corporation warrants its products to be free from defects for a period of one year. Banner Engineering Corporation will repair or replace, free of charge, any product of its manufacture found to be defective at the time it is returned to the factory during the warranty period. This warranty does not cover damage or liability for the improper application of Banner products. This warranty is in lieu of any other warranty either expressed or implied.