TL15 In-Line Modular Tower Light Indicator Datasheet

Features

The TL15 In-Line Modular Tower Light is a bright, ultra-small indicator that can be used as a standalone device or connected in-line with a tower light, sensor, or signal to give additional visual and audible indication.

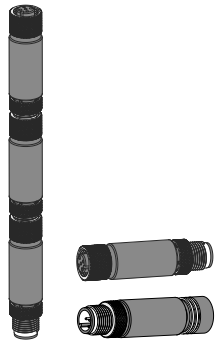

- Modular, single color segmented 15 mm diameter indicator and audible
- Multiple devices can be connected together to form a tower light
- Rugged overmolded indicator segment design meets IP65, IP67, and IP68
- Each model has a single specific pin that activates the LEDs or audible when signaled
- TL15 tower light indicators are available in four colors: green, yellow, red, and blue
- Indicator segments operate at 12 V DC or 24 V DC with bimodal inputs that can be wired as PNP or NPN devices
- Audible segments operate from 12 V DC to 30 V DC that can be wired as PNP devices

Models

Models	Segment Function (Input Active Pin)	Connection
TL15G4Q	Green (Pin 4)	5-pin male/female M12 quick-disconnect connectors
TL15Y1Q	Yellow (Pin 1)	
TL15R2Q	Red (Pin 2)	
TL15B4Q	Blue (Pin 4)	
TL15G1Q	Green (Pin 1)	
TL15Y2Q	Yellow (Pin 2)	
TL15R5Q	Red (Pin 5)	
TL15R1Q	Red (Pin 1)	
TL15R4Q	Red (Pin 4)	
TL15GYRQ	Green (Pin 4), Yellow (Pin 1), Red (Pin 2)	
TL15BGYRQ	Blue (Pin 4), Green (Pin 1), Yellow (Pin 2), Red (Pin 5)	
TL15A5Q	Audible (Pin 5)	5-pin male M12 quick-disconnect connector
TL15A1Q	Audible (Pin 1)	
TL15A2Q	Audible (Pin 2)	
TL15GYRAQ	Green (Pin 4), Yellow (Pin 1), Red (Pin 2), Audible (Pin 5)	Indicator Segments: 5-pin male/female M12 quick-disconnect connectors
		Audible Segment: 5-pin male M12 quick-disconnect connector

NOTE: Models with three or four assemblies are packaged in a kit with separate segments.

Wiring

Indicator Segments

Wiring	Pinouts	Pin	Wire Color	Description*
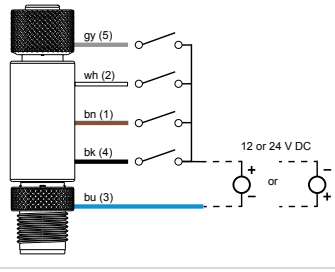	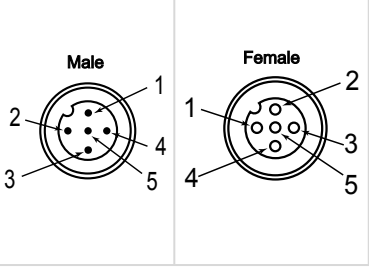	1	Brown	Active Bimodal Input Pin: 12 V DC or 24 V DC
		2	White	
		4	Black	
		5	Gray	
		3	Blue	DC Common

*Continuity between male and female connection for all five wires, including IO-link communications. Each model activates from one input pin. See model table.

Original Instructions
07-May-25

© Banner Engineering Corp. All rights reserved.
www.bannerengineering.com

227490
p/n: 227490 Rev. G

ПРОМЭЛЕКТРОНИКА/ sales@prom-elec.com

Audible Segments

Wiring	Pinout	Pin	Wire Color	Description*
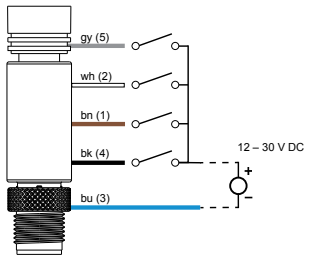	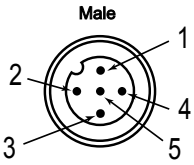	1	Brown	Active PNP Input Pin: 12 V DC to 30 V DC
		2	White	
		4	Black	
		5	Gray	
		3	Blue	DC Common

Specifications

Supply Voltage

Indicator segments: 12 V DC (±10%) at 80 mA maximum or 24 V DC (±10%) nominal at 40 mA maximum

Audible segments: 12 V DC to 30 V DC
- 12 V DC: 55 mA maximum
- 24 V DC: 30 mA maximum
- 30 V DC: 25 mA maximum

Supply Protection Circuitry

Protected against reverse polarity and transient voltages

Audible Characteristics

Oscillation frequency: 2.9 kHz ± 250 Hz

Sound intensity (typical): 79 dB at 1 meter

Small yellow LED turns on when audible is activated

Indicator Characteristics

1 color

Color	Dominant Wavelength (nm)	Color Coordinates[1]		Lumen Output (Typical at 25 °C)
		x	y	
Green	535	0.216	0.75	18
Yellow	590	0.566	0.423	22
Red	620	0.692	0.306	10
Blue	470	0.134	0.066	3

Connections

Indicator segments: Integral 5-pin M12 male/female quick-disconnect connector

Audible segments: Integral 5-pin M12 male quick-disconnect connector

[1] Refer to CIE 1931 chromaticity diagram or color chart, to show equivalent color with indicated color coordinates.

Construction

Indicator segments:
- Coupling material: Nickel-plated brass
- Connector body: PVC diffuse white

Audible segments:
- Coupling material: Nickel-plated brass
- Connector body: PVC translucent black
- Audible housing: Nylon

Vibration and Mechanical Shock

Meets IEC 60068-2-6 requirements (Vibration: 10 Hz to 55 Hz, 0.5 mm amplitude, 5 minutes sweep, 30 minutes dwell)

Meets IEC 60068-2-27 requirements (Shock: 15G 11 ms duration, half sine wave)

Environmental Rating

Indicator segments: IP65, IP67, IP68

Audible segments: IP60

UL Type 1

Operating Conditions

Temperature: –40 °C to +50 °C (–40 °F to +122 °F)

Storage Temperature: –40 °C to +70 °C (–40 °F to +158 °F)

Required Overcurrent Protection

WARNING: Electrical connections must be made by qualified personnel in accordance with local and national electrical codes and regulations.

Overcurrent protection is required to be provided by end product application per the supplied table.

Overcurrent protection may be provided with external fusing or via Current Limiting, Class 2 Power Supply.

Supply wiring leads < 24 AWG shall not be spliced.

For additional product support, go to www.bannerengineering.com.

Supply Wiring (AWG)	Required Overcurrent Protection (A)	Supply Wiring (AWG)	Required Overcurrent Protection (A)
20	5.0	26	1.0
22	3.0	28	0.8
24	1.0	30	0.5

Certifications

Banner Engineering BV
Park Lane, Culliganlaan 2F bus 3
1831 Diegem, BELGIUM

Turck Banner LTD Blenheim House
Blenheim Court
Wickford, Essex SS11 8YT
GREAT BRITAIN

FCC Part 15 Class B for Unintentional Radiators

(Part 15.105(b)) This equipment has been tested and found to comply with the limits for a Class B digital device, pursuant to part 15 of the FCC Rules. These limits are designed to provide reasonable protection against harmful interference in a residential installation. This equipment generates, uses, and can radiate radio frequency energy and, if not installed and used in accordance with the instructions, may cause harmful interference to radio communications. However, there is no guarantee that interference will not occur in a particular installation. If this equipment does cause harmful interference to radio or television reception, which can be determined by turning the equipment off and on, the user is encouraged to try to correct the interference by one or more of the following measures:

- Reorient or relocate the receiving antenna.
- Increase the separation between the equipment and receiver.
- Connect the equipment into an outlet on a circuit different from that to which the receiver is connected.
- Consult the dealer or an experienced radio/TV technician for help.

(Part 15.21) Any changes or modifications not expressly approved by the party responsible for compliance could void the user's authority to operate this equipment.

Industry Canada ICES-003(B)

This device complies with CAN ICES-3 (B)/NMB-3(B). Operation is subject to the following two conditions: 1) This device may not cause harmful interference; and 2) This device must accept any interference received, including interference that may cause undesired operation.

Cet appareil est conforme à la norme NMB-3(B). Le fonctionnement est soumis aux deux conditions suivantes : (1) ce dispositif ne peut pas occasionner d'interférences, et (2) il doit tolérer toute interférence, y compris celles susceptibles de provoquer un fonctionnement non souhaité du dispositif.

© Banner Engineering Corp. All rights reserved.
www.bannerengineering.com

Dimensions

All measurements are listed in millimeters [inches], unless noted otherwise. The measurements provided are subject to change. Audible segment measurements are functionally identical to indicator segment measurements.

Indicator segments

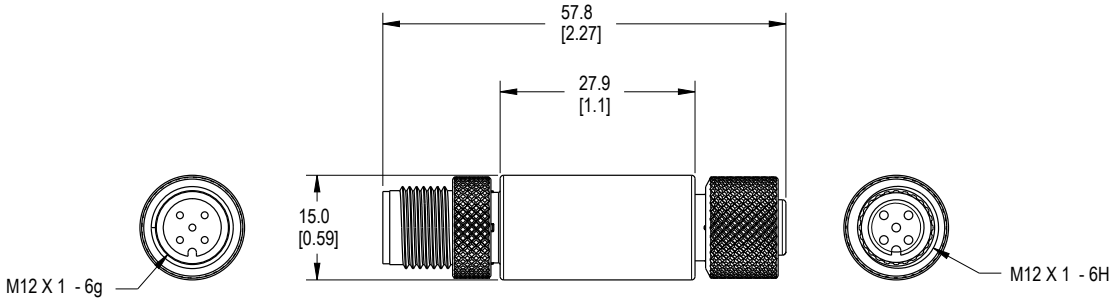

Audible segments

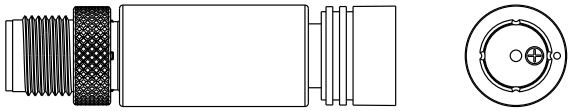

Accessories

Cordsets

5-pin Single-Ended M12 Female Cordsets				
Model	**Length**	**Dimensions (mm)**	**Pinout (Female)**	
BC-M12F5-22-1	1 m (3.28 ft)	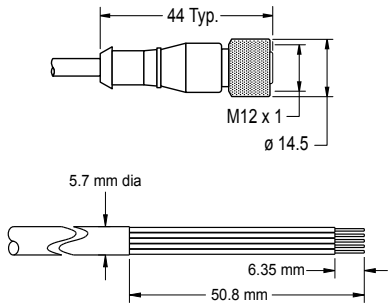	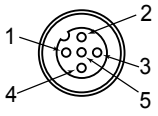	1 = Brown 2 = White 3 = Blue 4 = Black 5 = Gray
BC-M12F5-22-2	2 m (6.56 ft)			
BC-M12F5-22-5	5 m (16.4 ft)			
BC-M12F5-22-8	8 m (26.25 ft)			
BC-M12F5-22-10	10 m (30.81 ft)			
BC-M12F5-22-15	15 m (49.2 ft)			

5-pin Single-Ended M12 Female Right-Angle Cordsets				
Model	**Length**	**Dimensions (mm)**	**Pinout (Female)**	
BC-M12F5A-22-1	1 m (3.28 ft)	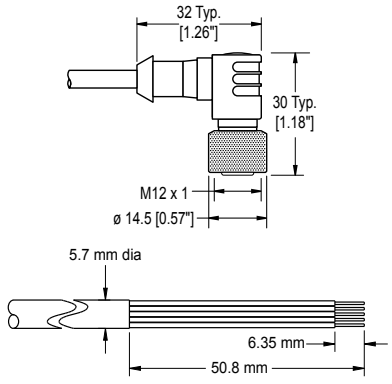	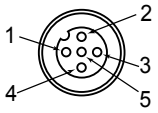	1 = Brown 2 = White 3 = Blue 4 = Black 5 = Gray
BC-M12F5A-22-2	2 m (6.56 ft)			
BC-M12F5A-22-5	5 m (16.4 ft)			
BC-M12F5A-22-8	8 m (26.25 ft)			
BC-M12F5A-22-10	10 m (30.81 ft)			
BC-M12F5A-22-15	15 m (49.2 ft)			

© Banner Engineering Corp. All rights reserved.
www.bannerengineering.com

5-pin Double-Ended M12 Female to M12 Male Cordsets				
Model	**Length**	**Dimensions (mm)**	**Pinouts**	
BC-M12F5-M12M5-22-1	1 m (3.28 ft)	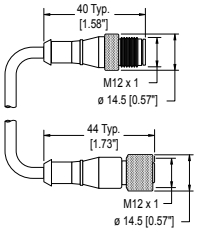	Female 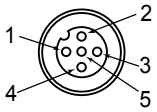 Male 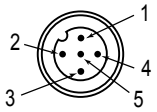	1 = Brown 2 = White 3 = Blue 4 = Black 5 = Gray
BC-M12F5-M12M5-22-2	2 m (6.56 ft)			
BC-M12F5-M12M5-22-5	5 m (16.4 ft)			
BC-M12F5-M12M5-22-8	8 m (26.25 ft)			
BC-M12F5-M12M5-22-10	10 m (30.81 ft)			
BC-M12F5-M12M5-22-15	15 m (49.2 ft)			

Brackets

LMBM12MAG
- Attaches to M12 cordset end
- Black polypropylene
- 11.8 kg (26 lb) pull force
- One piece

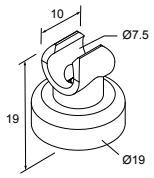

LMBM12SP
- Attaches to M12 cordset end
- Black polypropylene
- Supplied with thread-forming hardware
- Pack of seven

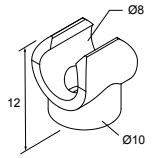

LMBS15MAG
- Attaches to S15 housing
- White polypropylene
- 11.8 kg (26 lb) pull force
- One piece

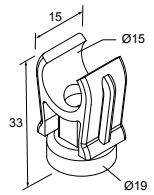

LMBS15SP
- Attaches to S15 housing
- White polypropylene
- Clearance for M5 or #10 hardware
- Pack of five

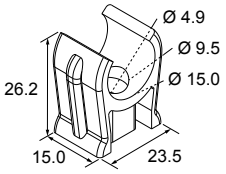

ACC-CAP M12-10
- 10 Caps
- Seal and protect exposed, unterminated cascade quick-disconnect connectors



Banner Engineering Corp Limited Warranty

Banner Engineering Corp. warrants its products to be free from defects in material and workmanship for one year following the date of shipment. Banner Engineering Corp. will repair or replace, free of charge, any product of its manufacture which, at the time it is returned to the factory, is found to have been defective during the warranty period. This warranty does not cover damage or liability for misuse, abuse, or the improper application or installation of the Banner product.

THIS LIMITED WARRANTY IS EXCLUSIVE AND IN LIEU OF ALL OTHER WARRANTIES WHETHER EXPRESS OR IMPLIED (INCLUDING, WITHOUT LIMITATION, ANY WARRANTY OF MERCHANTABILITY OR FITNESS FOR A PARTICULAR PURPOSE), AND WHETHER ARISING UNDER COURSE OF PERFORMANCE, COURSE OF DEALING OR TRADE USAGE.

This Warranty is exclusive and limited to repair or, at the discretion of Banner Engineering Corp., replacement. **IN NO EVENT SHALL BANNER ENGINEERING CORP. BE LIABLE TO BUYER OR ANY OTHER PERSON OR ENTITY FOR ANY EXTRA COSTS, EXPENSES, LOSSES, LOSS OF PROFITS, OR ANY INCIDENTAL, CONSEQUENTIAL OR SPECIAL**

© Banner Engineering Corp. All rights reserved.
www.bannerengineering.com

DAMAGES RESULTING FROM ANY PRODUCT DEFECT OR FROM THE USE OR INABILITY TO USE THE PRODUCT, WHETHER ARISING IN CONTRACT OR WARRANTY, STATUTE, TORT, STRICT LIABILITY, NEGLIGENCE, OR OTHERWISE.

Banner Engineering Corp. reserves the right to change, modify or improve the design of the product without assuming any obligations or liabilities relating to any product previously manufactured by Banner Engineering Corp. Any misuse, abuse, or improper application or installation of this product or use of the product for personal protection applications when the product is identified as not intended for such purposes will void the product warranty. Any modifications to this product without prior express approval by Banner Engineering Corp will void the product warranties. All specifications published in this document are subject to change; Banner reserves the right to modify product specifications or update documentation at any time. Specifications and product information in English supersede that which is provided in any other language. For the most recent version of any documentation, refer to: www.bannerengineering.com.

For patent information, see www.bannerengineering.com/patents.

© Banner Engineering Corp. All rights reserved.