Features

To view or download the latest technical information about this product, including specifications, dimensions, accessories, and wiring, go to www.bannerengineering.com. Search for the instruction manual, part number 130426. This Quick Start Guide provides basic configuration and use instructions when the receiver interface is used. Instructions for using the PC interface are available in the instruction manual.

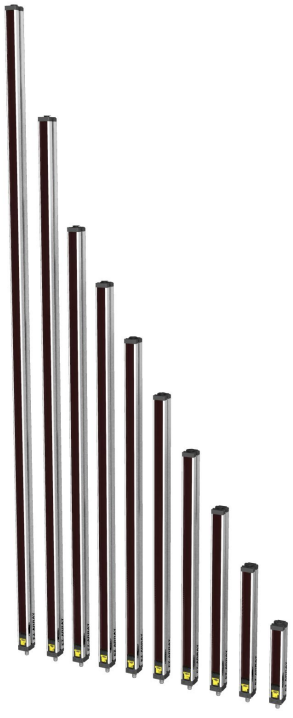

- A cost-effective, two-piece measuring light curtain designed for quick and simple installations with the sophistication to handle the toughest sensing applications
- Excels at high-speed, precise process monitoring and inspection, profiling, and web-guiding applications
- A comprehensive combination of scanning options:
  - 14 measurement (scan analysis) modes
  - Three scanning methods
  - Selectable beam blanking
  - Selectable continuous or gated scan initiation
  - Selectable threshold setting for semi-transparent applications
  - Two analog outputs, two discrete outputs
  - Communication via PC interface
- Outstanding 4-meter range with 5 mm beam spacing
- Available in 12 lengths from 150 mm to 2400 mm
- Excellent 5 mm minimum object detection or 2.5 mm edge resolution, depending on the scanning method
- Receiver user interface for quick, intuitive setup of many common applications:
  - Six-position DIP switch for setting scan mode, measurement mode, analog slope, discrete output 2 option (complementary measurement or alarm operation)
  - Two push buttons for gain method selection and alignment/ blanking
  - Seven Zone LEDs for instant alignment and beam blockage information
  - Three-digit display for sensing information and diagnostics
- Software PC interface available for advanced configuration setup
- Remote teach wire option for alignment, gain settings, inverted display, and DIP switch disable

WARNING:

- **Do not use this device for personnel protection**
- Using this device for personnel protection could result in serious injury or death.
- This device does not include the self-checking redundant circuitry necessary to allow its use in personnel safety applications. A device failure or malfunction can cause either an energized (on) or de-energized (off) output condition.

System Components

A typical A-GAGE EZ-ARRAY has four components: an emitter and a receiver, each with an integral quick-disconnect (QD) fitting, plus an 8-pin QD cordset for the emitter and for the receiver.

For applications that use the Modbus RTU-485 interface, an additional 5-wire cable is used to connect the receiver with a PC or process controller, via the Modbus 485-RTU connection. (A PC used with software version 2.0 for configuration must run on Windows® XP, Vista™, or WIN7™.)



Original Instructions
07-Apr-26

© Banner Engineering Corp. All rights reserved.
www.bannerengineering.com

126701
p/n: 126701 Rev. E

ПРОМЭЛЕКТРОНИКА/ sales@prom-elec.com

Models

The **standard models** can solve the majority of measuring array applications. These models have a range of 400 mm to 4 m and are capable of measuring a wide variety of objects. For low-contrast applications, these models can detect changes in contrast down to 15%. These models are ideal for web guiding, carton dimensioning, or other sizing applications.

Standard models

Emitter Model	Receiver Model	Receiver Discrete Output	Receiver Analog Output	Length Y[1]	Total Beams
EA5E150Q	EA5R150NIXMODQ	NPN	Current (4-20 mA)	150 mm (5.9 in)	30
	EA5R150PIXMODQ	PNP	Current (4-20 mA)		
	EA5R150PUXMODQ		Voltage (0-10 V)		
EA5E300Q	EA5R300NIXMODQ	NPN	Current (4-20 mA)	300 mm (11.8 in)	60
	EA5R300NUXMODQ		Voltage (0-10 V)		
	EA5R300PIXMODQ	PNP	Current (4-20 mA)		
	EA5R300PUXMODQ		Voltage (0-10 V)		
EA5E450Q	EA5R450NIXMODQ	NPN	Current (4-20 mA)	450 mm (17.7 in)	90
	EA5R450NUXMODQ		Voltage (0-10 V)		
	EA5R450PIXMODQ	PNP	Current (4-20 mA)		
	EA5R450PUXMODQ		Voltage (0-10 V)		
EA5E600Q	EA5R600NIXMODQ	NPN	Current (4-20 mA)	600 mm (23.6 in)	120
	EA5R600NUXMODQ		Voltage (0-10 V)		
	EA5R600PIXMODQ	PNP	Current (4-20 mA)		
	EA5R600PUXMODQ		Voltage (0-10 V)		
EA5E750Q	EA5R750NIXMODQ	NPN	Current (4-20 mA)	750 mm (29.5 in)	150
	EA5R750PIXMODQ	PNP	Current (4-20 mA)		
	EA5R750PUXMODQ		Voltage (0-10 V)		
EA5E900Q	EA5R900NIXMODQ	NPN	Current (4-20 mA)	900 mm (35.4 in)	180
	EA5R900NUXMODQ		Voltage (0-10 V)		
	EA5R900PIXMODQ	PNP	Current (4-20 mA)		
	EA5R900PUXMODQ		Voltage (0-10 V)		
EA5E1050Q	EA5R1050NIXMODQ	NPN	Current (4-20 mA)	1050 mm (41.3 in)	210
	EA5R1050NUXMODQ		Voltage (0-10 V)		
	EA5R1050PIXMODQ	PNP	Current (4-20 mA)		
	EA5R1050PUXMODQ		Voltage (0-10 V)		
EA5E1200Q	EA5R1200NIXMODQ	NPN	Current (4-20 mA)	1200 mm (47.2 in)	240
	EA5R1200NUXMODQ		Voltage (0-10 V)		
	EA5R1200PIXMODQ	PNP	Current (4-20 mA)		
	EA5R1200PUXMODQ		Voltage (0-10 V)		
EA5E1500Q	EA5R1500NIXMODQ	NPN	Current (4-20 mA)	1500 mm (59.1 in)	300
	EA5R1500NUXMODQ		Voltage (0-10 V)		
	EA5R1500PIXMODQ	PNP	Current (4-20 mA)		
	EA5R1500PUXMODQ		Voltage (0-10 V)		
EA5E1800Q	EA5R1800NUXMODQ	NPN	Voltage (0-10 V)	1800 mm (70.9 in)	360
	EA5R1800PIXMODQ	PNP	Current (4-20 mA)		
	EA5R1800PUXMODQ		Voltage (0-10 V)		
EA5E2100Q	EA5R2100NIXMODQ	NPN	Current (4-20 mA)	2100 mm (82.7 in)	420
	EA5R2100NUXMODQ		Voltage (0-10 V)		
	EA5R2100PIXMODQ	PNP	Current (4-20 mA)		
	EA5R2100PUXMODQ		Voltage (0-10 V)		
EA5E2400Q	EA5R2400NUXMODQ	NPN	Voltage (0-10 V)	2400 mm (94.5 in)	480
	EA5R2400PIXMODQ	PNP	Current (4-20 mA)		

Continued on page 3

[1] Models with array lengths 1050 mm and longer ship with a center bracket as well as two end-cap brackets.

© Banner Engineering Corp. All rights reserved.
www.bannerengineering.com

Continued from page 2

Emitter Model	Receiver Model	Receiver Discrete Output	Receiver Analog Output	Length Y	Total Beams
	EA5R2400PUXMODQ		Voltage (0-10 V)		

The **short-range low-contrast (SRLC) models** offer superior ability to detect and measure clear objects. These models have a range of 30 mm to 1.5 m and are capable of detecting contrast changes as small as 3%. These models are ideal for profiling clear glass plates, monitoring the flow of transparent bottles on a conveyor, or other clear object applications. The receivers for these models have a PNP discrete output.

Short-range low-contrast models

Emitter Model	Receiver Model	Receiver Analog Output	Length Y (mm)	Total Beams
EA5E150Q	EA5R150PIXMODSRLCQ	Current (4-20mA)	150	30
EA5E300Q	EA5R300PIXMODSRLCQ	Current (4-20mA)	300	60
EA5E450Q	EA5R450PUXMODSRLCQ	Voltage (0-10V)	450	90
	EA5R450PIXMODSRLCQ	Current (4-20mA)		
EA5E600Q	EA5R600PUXMODSRLCQ	Voltage (0-10V)	600	120
	EA5R600PIXMODSRLCQ	Current (4-20mA)		
EA5E750Q	EA5R750PIXMODSRLCQ	Current (4-20mA)	750	150
EA5E900Q	EA5R900PIXMODSRLCQ	Current (4-20mA)	900	180
EA5E1050Q	EA5R1050PIXMODSRLCQ	Current (4-20mA)	1050	210
EA5E1200Q	EA5R1200PIXMODSRLCQ	Current (4-20mA)	1200	240
EA5E1500Q	EA5R1500PUXMODSRLCQ	Voltage (0-10V)	1500	300
	EA5R1500PIXMODSRLCQ	Current (4-20mA)		
EA5E1800Q	EA5R1800PIXMODSRLCQ	Current (4-20mA)	1800	360
EA5E2100Q	EA5R2100PIXMODSRLCQ	Current (4-20mA)	2100	420
EA5E2400Q	EA5R2400PIXMODSRLCQ	Current (4-20mA)	2400	480

To select your components:

1. Select the desired array length.
2. Select the emitter model for that array length.
3. Select the corresponding receiver model with the discrete and analog outputs needed for your application.

The following models are no longer available for order but are still covered by the information in this document.

Inactive standard models

Model	Receiver Discrete Output	Receiver Analog Output	Length Y (mm)	Total Beams
EA5R150NUXMODQ	NPN	Voltage (0-10 V)	150	30
EA5R750NUXMODQ	NPN	Voltage (0-10 V)	750	150
EA5R1800NIXMODQ	NPN	Current (4-20 mA)	1800	360
EA5R2400NIXMODQ	NPN	Current (4-20 mA)	2400	480

Inactive short-range low-contrast models

Model	Receiver Analog Output	Length Y (mm)	Total Beams
EA5R150PUXMODSRLCQ	Voltage (0-10 V)	150	30
EA5R300PUXMODSRLCQ	Voltage (0-10 V)	300	60
EA5R1200PUXMODSRLCQ	Voltage (0-10V)	1200	240

© Banner Engineering Corp. All rights reserved.
www.bannerengineering.com

Overview

The A-GAGE® EZ-ARRAY™ measuring light screen is ideal for such applications as on-the-fly product sizing and profiling, edge-guiding and center-guiding, loop tensioning control, hole detection, parts counting, and similar uses.

Emitters and receivers are available with arrays from 150 to 2400 mm (5.9 in to 94.5 in) long. The emitter has a column of infrared light emitting diodes (LEDs) spaced 5 mm apart; their light is collimated and directed toward the receiver, positioned opposite the emitter, which has photodiodes on the same 5 mm pitch. The light from each emitter LED is detected by the corresponding receiver photodiode.

Application

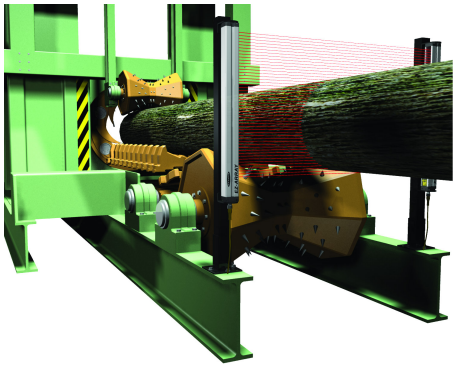

This sophisticated light curtain is capable of detecting opaque cylindrical objects as small as 5mm in diameter or measuring part edges within 2.5 mm, depending on the scanning method selected . The sensing range is 400 mm to 4 m (16 in to 13 ft) on standard models and 30 mm to 1500 mm (1.18 in to 59 in) on the short-range, low-contrast models.[(2)]

Short range, low contrast models are available for applications requiring a shorter distance between emitter and receiver or where detection and profiling of non-opaque targets is needed. Detection of glass or other clear objects is possible with this system.

The EZ-ARRAY's two-piece design makes it economical and easy to use. Controller functionality is built into the receiver housing. It can be configured for many straightforward applications using the six-position DIP switch on the front of the receiver (the receiver user interface). For more advanced control, easy-to-use PC interface software is available on the included CD to configure the sensors using a PC.

The emitter and receiver housings can be side-mounted or end-cap-mounted using the included end-cap brackets; longer models also include a center bracket.

Beam synchronization is achieved via the 8-conductor sensor cables. Individual LEDs and a 3-digit diagnostic display on the receiver provide ongoing visual sensing status and diagnostic information. Comprehensive data is available to a process controller via a combination of five outputs: two analog, two discrete, and one Modbus 485-RTU communication interface.

Emitter and Receiver

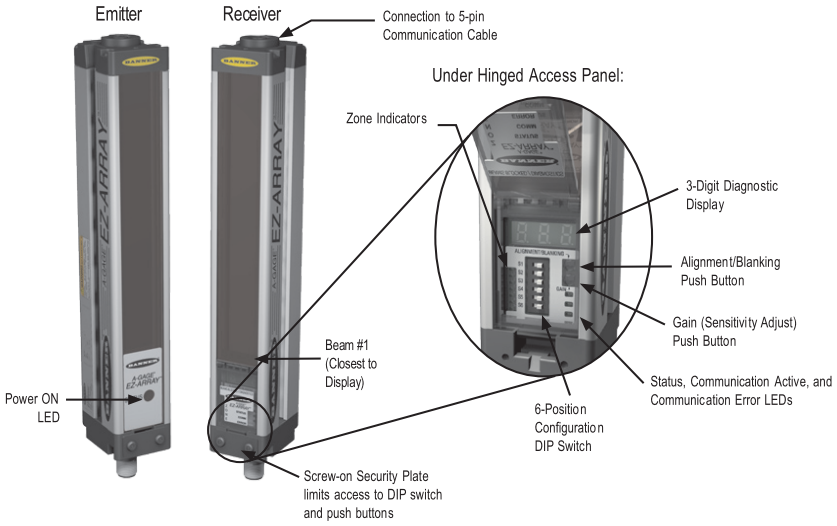

Diagnostic programming and easy-to-see indicators on the receiver simplify physical alignment and troubleshooting; more advanced diagnostics are available via the PC interface.

The alignment/blanking button automatically equalizes the excess gain of each beam for reliable object detection throughout the array. This routine need not be performed again unless the sensing application changes, or if the emitter and/or receiver is moved.

Configurable beam blanking accommodates machine components and fixtures that must remain in or move through the light screen. Blanking may be set using the receiver interface, the teach wire, or the PC interface.

[(2)] Contact the factory for short-range, low-contrast models.

© Banner Engineering Corp. All rights reserved.
www.bannerengineering.com

The EZ-ARRAY light screen provides a wide selection of sensing and output options, including measurement (“scan analysis”) modes and scanning methods that can determine a target object’s location, overall size, total height, or total width, or the number of objects. Scanning may be continuous or controlled by a gate sensor. Up to 15 systems may be networked via Modbus 485 RTU.

Status Indicators

Both the emitter and receiver provide ongoing visual indication of operating and configuration status.

The emitter has a red LED that signals proper operation (ON when power is applied).

Emitter status indicators

LED	Color	Description
Status LED	Red ON	Status OK
	Red Flashing at 1 Hz	Error

The receiver has a bright Status LED that indicates overall sensing status (OK, marginal alignment, and hardware error). Two other LEDs indicate whether communication is active or if there is an error. Seven Zone indicators each communicate the blocked/aligned status of one-seventh of the total array. A 3-digit diagnostic display provides further diagnostic information: number of beams blocked, whether blanking is configured, and error codes. See the Instruction Manual for more information on the error codes.

Receiver status indicators

LED	Color	Description
7 Zone Indicators	Red	Blocked channels within the zone
	Green	All channels are clear within the zone
3-digit 7-segment Measurement Mode/Diagnostic Indicator Status LED	Red	Hardware Error or marginal alignment
	Green	Status OK
Modbus Activity Indicator LED	Amber	Modbus activity
Modbus Error Indicator LED	Red On	Error

Zone Indicators (Beams Blocked Segment)

Seven LEDs represent emitter/receiver alignment status. They provide a visual aid for sensor alignment and monitoring objects within the sensor’s field of view. The sensor array is partitioned into seven equal segments, each of which is represented by one of the seven LEDs. The LED closest to DIP switch S6 (see "Configuration via DIP Switch or PC Interface" on page 6) represents the group of optical channels closest to the receiver display (the “bottom” group). The LED closest to DIP switch 1 represents the far segment of channels.

These LEDs illuminate either green or red. When an LED is green, no unblanked beams are obstructed in that segment. When the LED is red, one or more beams in that segment is obstructed.

Three-Digit Display

The 3-digit display has slightly different functions during normal operation, alignment, and gain adjust modes. In normal operation the display indicates the current numerical value of measurement mode 1. The display also identifies the following activated sensor functions: blanking and locked-out user interface/electronic configuration, as shown in "Electronic Configuration Indicator" on page 6.

During blanking mode, the display reads “**n**”, followed by the number of blocked beams in the array. During alignment mode, it reads “**A**”, followed by the number of blocked, unblanked beams; a period follows the A (“**A.**”) if blanking is configured.

During gain adjust mode, the display reads “**L**” followed by “**1**” or “**2**” to indicate the gain level. (A “**1**” represents high excess gain, and a “**2**” represents low contrast.)

If a sensing error occurs, the display reads “**c**” followed by a number that corresponds to the recommended corrective action.

Blanking Indicator

The Blanking indicator will be visible (ON) when the blanking feature is enabled. It appears as a period following the first digit of the display.

© Banner Engineering Corp. All rights reserved.
www.bannerengineering.com

Electronic Configuration Indicator

Electronic configuration indicator

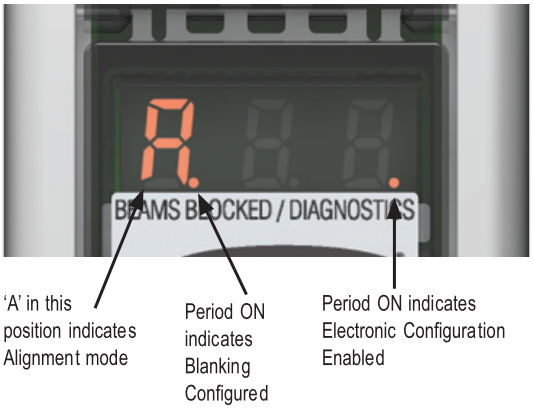

The Electronic Configuration indicator is on when the sensor configuration is defined by the PC interface and not the DIP switch. When electronic configuration is enabled, the DIP switch is ignored.

Configuration Instructions

Configuration via DIP Switch or PC Interface

Commonly used configuration options can be set up easily via a six-position DIP switch located behind a hinged clear access panel on the front of the receiver.

Access to the DIP switch can be prevented by using the screw-on security plate to hold the clear access panel closed or by disabling them via the PC interface.

For more advanced, individualized applications, use the supplied software program to configure the receiver. The menu-driven program easily accesses the many scanning and output options. After the desired options are selected, the combination of selections can be saved in an .xml file, stored in the system configuration computer, and recalled as needed. Communication between the sensors and a PC is accomplished via the serial output and Modbus 485 RTU interface.

The software also provides alignment and diagnostics routines. An Alignment screen displays the individual status of each beam in the light screen, as well as the total number of beams, and totals of beams blocked, made, and blanked. Built-in diagnostics can be used to assess emitter and receiver status.

Inverting the 3-Digit Display

When the sensors is mounted inverted, invert the 3-digit display for readability. The periods on the three seven-segment indicators do not move when the display is inverted.

Scanning Method

One of three scanning methods may be configured:

- Straight Scan
- Single-edge Scan
- Double-edge Scan (1, 2, 4, 8, 16, or 32 steps)

Sensor response time is a function of sensor length and scanning method. Maximum scan times are shown in "Maximum Scan Times in SIO Mode" on page 8.

Scanning Method	Straight Scan		Single-Edge Scan	Double-Edge Scan (per Edge)					
				Step Size (Number of Beams)					
	Low-Contrast	High-Excess-Gain		1	2	4	8	16	32
Minimum Object Detection Size[3]	5 mm (0.2 in)	10 mm (0.4 in)	10 mm (0.4 in)	10 mm (0.4 in)	20 mm (0.8 in)	30 mm (1.2 in)	50 mm (2 in)	90 mm (3.6 in)	170 mm (6.8 in)

Continued on page 7

[3] MODS determined using a rod target object

© Banner Engineering Corp. All rights reserved.
www.bannerengineering.com

Continued from page 6

Scanning Method	Straight Scan		Single-Edge Scan	Double-Edge Scan (per Edge)					
				Step Size (Number of Beams)					
	Low-Contrast	High-Excess-Gain		1	2	4	8	16	32
Edge Resolution	5 mm (0.2 in)	5 mm (0.2 in)	2.5 mm (0.1 in)	2.5 mm (0.1 in)	2.5 mm (0.1 in)	2.5 mm (0.1 in)	2.5 mm (0.1 in)	2.5 mm (0.1 in)	2.5 mm (0.1 in)

Straight Scan

Straight Scan is the default mode, in which all beams are scanned in sequence, from the display end to the far end of the array. This scanning method provides the smallest object detection size.

Straight scan is used when low-contrast sensitivity is selected or when single-edge and double-edge scan cannot be used. The edge resolution is 5 mm (0.2 in). When low-contrast sensing is selected (used when measuring semi-transparent objects), the minimum object detection size is 5 mm (0.2 in) diameter. When high-excess-gain sensing is selected, the minimum object detection size is 10 mm (0.4 in).

Single-Edge Scan

Single-Edge Scan is used to measure the height of a single object. This scanning method is commonly used for box height measurement. For single-edge scan, the receiver always activates the first beam channel (or "bottom" beam, nearest the display). When the first beam is blocked, the sensor performs a binary search to hunt for the last beam blocked, as follows:

1. The receiver scans only the first beam until it is blocked.
2. When the first beam is blocked, the sensor looks to see whether the middle beam is blocked or made (unblocked).
3. If the middle beam is made (unblocked), the sensor checks the bottom quarter beam; if the middle beam is blocked, the sensor checks the top quarter beam.
4. The routine continues to divide the number of beams in half until the edge is found.

Single-edge scan can be used only for single, solid objects that block the first beam (closest to the display). Because the receiver checks only the first beam until it is blocked, single-edge scan will not function when the item to be measured does not block the first beam. Single-edge scan is also ineffective if the object does not present a continuous blocked pattern.

Single-edge scan works only when the high-excess-gain setting is enabled. When single-edge scan is selected, the sensor object detection size is 10 mm and edge resolution is 2.5 mm.

Double-Edge Scan

Double-edge scan is used to detect two edges of a single object, for example, to determine box width measurements. Double-edge scan requires the selection of a step size: 1, 2, 4, 8, 16 or 32 beams.

The sensor uses the steps to "skip" over beams, as follows:

1. The sensor activates beam 1 (closest to the sensor display end).
2. The sensor activates the next beam, determined by the step size. (For example, if the step size is 2, beam 3 is next; if the step size is 8, beam 9 is next.)
3. As long as the activated beam is made (unblocked), the sensor continues the stepping routine until a blocked beam is found.
4. When a blocked beam is found, a binary search is conducted to find the object's "bottom" edge.
5. When the bottom edge is found, the sensor continues to step through the array until it finds the next unblocked beam.
6. Another binary search is performed to find the second edge.

Similar to single-edge scan, double-edge scan has some restrictions: the object should provide a solid obstruction; the size of the object determines the maximum step size. Double-edge scan can be used to detect up to three objects. Like single-edge scan, double-edge scan works only when the high-excess-gain setting is selected. When double-edge scan is selected, the sensor object detection size varies, depending on the step size, but edge resolution is 2.5 mm.

© Banner Engineering Corp. All rights reserved.
www.bannerengineering.com

Double-edge scan

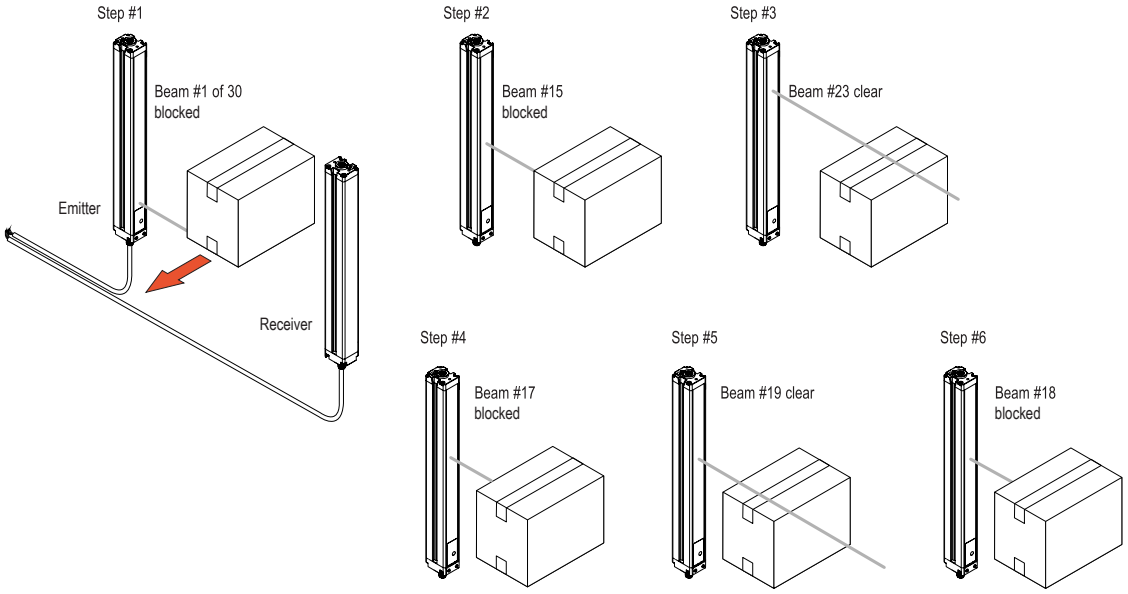

Maximum Scan Times in SIO Mode

Maximum scan times (in milliseconds) during SIO mode

Array Length	Straight Scan	Single-Edge Scan	Double-Edge Scan					
			Step 1 Beam	Step 2 Beams	Step 4 Beams	Step 8 Beams	Step 16 Beams	Step 32 Beams
150 mm (5.9 in)	2.8	1.5	3.4	2.8	2.5	2.4	1.9	N/A
300 mm (11.8 in)	5.0	1.5	5.9	4.1	3.2	2.8	2.3	2.1
450 mm (17.7 in)	7.1	1.6	8.5	5.5	4.2	4.0	3.2	2.5
600 mm (23.6 in)	9.3	1.6	11.0	6.8	4.9	4.2	4.0	2.8
750 mm (29.5 in)	11.4	1.7	13.5	8.1	5.7	4.6	4.5	4.5
900 mm (35.4 in)	13.6	1.7	16.0	9.5	6.1	4.7	4.6	4.6
1050 mm (41.3 in)	15.7	1.8	18.6	10.8	6.8	5.2	4.8	4.8
1200 mm (47.2 in)	17.9	1.8	21.1	12.2	7.4	5.5	4.9	4.9
1500 mm (59.1 in)	22.2	1.9	26.1	14.8	9.0	6.4	5.3	4.9
1800 mm (70.9 in)	26.5	2.0	31.2	17.5	10.5	7.3	6.0	5.6
2100 mm (82.7 in)	30.8	2.8	36.3	20.2	12.0	8.2	6.7	5.6
2400 mm (94.5 in)	35.1	2.8	41.4	22.9	13.5	9.1	7.4	5.9

Scan times are exclusive of serial communication transmission times.

Scan times are also dependent on analog filter speed. Refer to the instruction manual for more information.

Gain Configuration

The EZ-ARRAY provides two gain options for straight scan applications: high excess gain and low contrast. The gain method can be selected using the receiver push button, the receiver remote teach wire, or the PC interface.

High (maximized) excess gain is suited for detecting opaque objects and for reliable sensing in dirtier environments where objects to be detected are 10 mm or larger. The high excess gain method is always used in single- and double-edge scan. The high excess gain option has a minimum blocked threshold level, which provides reliable sensing at higher excess gain levels.

The low-contrast setting is used for sensing semi-transparent materials and for detecting objects as small as 5 mm (straight scan only). In low-contrast operation, only a portion of a beam must be blocked for detection to occur. In low-contrast operation, the sensor sets an individual threshold for each optical channel during the alignment process; this process equalizes the signal strength to allow semi-transparent object detection.

© Banner Engineering Corp. All rights reserved.
www.bannerengineering.com

When using the PC interface, low-contrast sensing provides a fine-tune sensitivity setting of 15% to 50%. When using the receiver interface, low-contrast sensitivity is always 30%.

On short-range, low-contrast models, sensitivity can be set between 3% to 20% when using the PC interface. When using the receiver interface, low contrast sensitivity is always 7%.

Gain configuration settings

Gain Setting	Scan Method	EZ-ARRAY MODS [4]	EZ-ARRAY Resolution
Low Contrast	Straight Scan	5 mm	5 mm
	Single-edge Scan	-	-
	Double-edge Scan	-	-
High Excess Gain	Straight Scan	10 mm	5 mm
	Single-edge Scan	10 mm	2.5 mm
	Double-edge Scan	Depends on step size	2.5 mm / edge 5 mm total (both edges)

Optical Alignment

The objective of the optical alignment process is to adjust the emitter light level to maximize sensor performance. Perform the alignment procedure at installation and again whenever the emitter and/or receiver is moved.

During the alignment procedure, the receiver polls each beam channel to measure excess gain and performs a gain adjustment for each beam. When the system exits the alignment procedure, each channel's signal strength is stored in non-volatile memory.

The procedure can be performed using the receiver remote wire, the receiver interface push button or the PC interface. The receiver's Alignment push button may be disabled, by configuration thru the PC interface.

1. After the electrical connections are made, power up the emitter and receiver.
2. Verify input power is present to both emitter and receiver; the emitter Status indicator and the receiver Status LED should be ON green. If the receiver Status LED is on red (and a "**c**" appears on the 3-digit display), refer to the error codes.

   NOTE: At power-up, all Zone indicators are tested (flash red), then the number of blocked beams is displayed.

3. Observe the receiver indicators.
4. Optimize Alignment and Maximize Excess Gain:
   a. Verify the emitter and receiver are pointed squarely at each other. A straightedge or level can help determine the direction the sensor is facing.
   b. Slightly loosen the sensor mounting screws and rotate one sensor to the left and right, noting the positions where the receiver Zone indicators turn from green to red; repeat with the other sensor.
   c. Center each sensor between the noted positions and tighten the end cap mounting screws, making sure to maintain the positioning. The sensor windows should directly face each other.
5. After optimum optical alignment is verified, proceed to configuration, via the remote teach wire, the receiver interface, or the PC interface and complete the electronic alignment. This further alignment step adjusts the emitted light level of each beam for the application, to maximize sensing performance.

[4] MODS: Minimum Object Detection Size

© Banner Engineering Corp. All rights reserved.
www.bannerengineering.com

Optical alignment

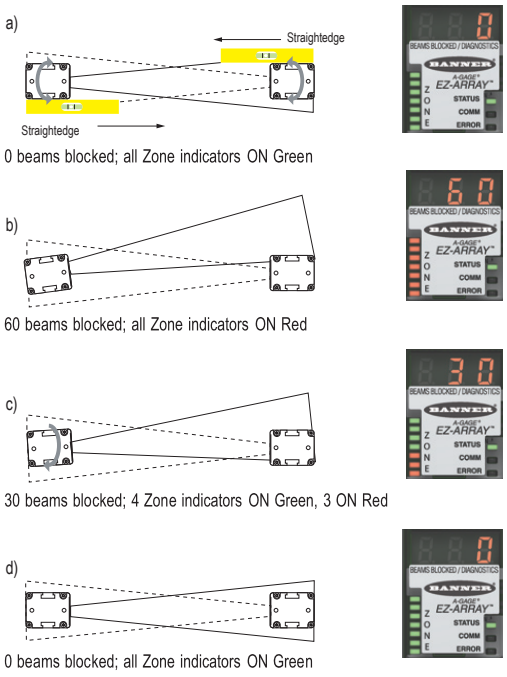

Receiver interface indicators during alignment

	All Beams Either Clear or Blanked	Some Beams Blocked or Mis-Aligned	Out of Alignment
Zone Indicators	All ON Green	Some ON Red (zones with blocked beams) Some ON Green (zones with all clear beams)	All ON Red (Some beams blocked in each zone)
Receiver Status Indicator	ON Green	ON Green	ON Green
3-Digit Display	0 (Number of blocked beams)	Number of blocked beams	Total number of beams in the array

Blanking

If a machine fixture or other equipment blocks one or more sensing beams, the affected beam channels may be blanked. The blanking option causes the receiver to ignore the status of blanked beams for measurement mode calculations.

For example, if a machine fixture blocks one or more beams during sensing, the output data will be incorrect; if the beams blocked by the fixture are blanked, the output data will be correct. Blanking may be configured using the receiver's Alignment push button, the receiver remote wire, or the PC interface.

For total beam values (TBB and TBM analysis modes), selection of blanked beams affects the proportional analog outputs. Blanked beams are ignored both in the number of blocked or made beams and in the total number of beams. For example, if a 30-beam array has 10 blanked beams and 10 of the remaining 20 beams are blocked, the analog output values will be at mid-range.

Measurement Mode Selection

The outputs may be configured for any of the measurement (scan analysis) modes, which refer to specific beam locations, quantities of beams, or edge transitions. Note that not all measurement mode options are available when the receiver interface is used for configuration.

When using the PC interface for configuration, the discrete outputs can have NPN or PNP polarity (regardless of model), be normally open or normally closed, and be assigned to any of the measurement modes. When using the receiver interface, limited output configuration combinations may be selected (see "Configuration via DIP Switch or PC Interface" on page 6).

> **NOTE:** Array beams are numbered in sequence (beam 1 located nearest the sensor display). The "first beam" referenced in the following descriptions is the beam nearest the sensor display.

"Beam Location" Modes

First Beam Blocked (FBB)

The location of the first blocked beam.

© Banner Engineering Corp. All rights reserved.
www.bannerengineering.com

First Beam Made (FBM)
The location of the first made (unblocked) beam.

Last Beam Blocked (LBB)
The location of the last blocked beam.

Last Beam Made (LBM)
The location of the last made beam.

Middle Beam Blocked (MBB)
The location of the beam midway between the first and last blocked beams.

"Beam Total" Modes

Total Beams Blocked (TBB)
The total number of blocked beams.

Total Beams Made (TBM)
The number of beams made.

Contiguous Beams Blocked (CBB)
The largest number of consecutively blocked beams.

Contiguous Beams Made (CBM)
The largest number of consecutively made beams.

Outside Dimension (OD)
The inclusive distance (measured in beams) from the first blocked beam to the last blocked beam.

Inside Dimension (ID)
The number of made beams, between the first and last blocked beams.

Transitions (TRN)
The number of changes from blocked to clear status and from clear to blocked status. (If beams 6–34 are blocked, then there is a clear-to-blocked transition from beam 5 to bream 6, and a blocked-to-clear transition from beam 34 to beam 35.) Transition mode can be used to count objects within the array.

Contiguous First Beam Blocked (CFBB)
The location of the first blocked beam in the largest group of adjacent blocked beams.

Contiguous Last Beam Blocked (CLBB)
The location of the last blocked beam in the largest group of adjacent blocked beams.

Carpet Nap and Carpet Edge
These measurement modes are used to measure the location of carpet backing and tuft and are selectable only via the PC interface and only when the Scan Type **Carpet Nap** is selected. The modes can be measured from either end of the sensor, but at least 10 beams (2 in) must be blocked from one edge.

© Banner Engineering Corp. All rights reserved.

Measurement mode - LBM-FBM

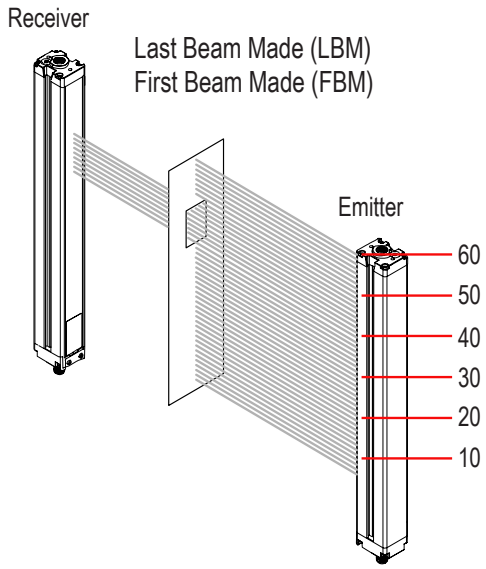

In Last Beam Made mode, the last beam is #50 of 60.

In First Beam Made mode, the first beam is #40 of 60.

Measurement mode - LBB-FBB

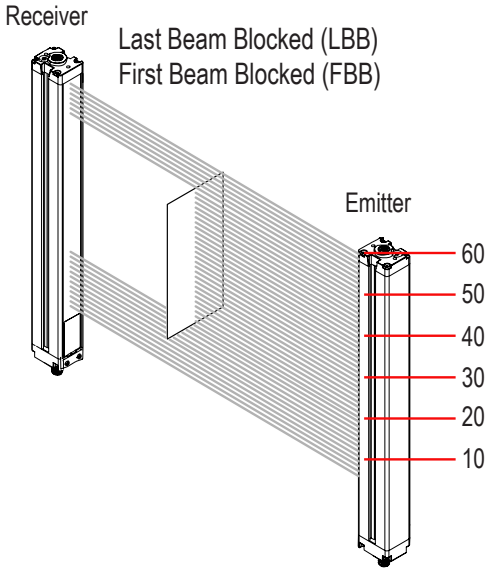

In Last Beam Blocked mode, the last beam is #55 of 60.

In First Beam Blocked mode, the first beam is #20 of 60.

© Banner Engineering Corp. All rights reserved.
www.bannerengineering.com

Measurement mode - TBM-TBB

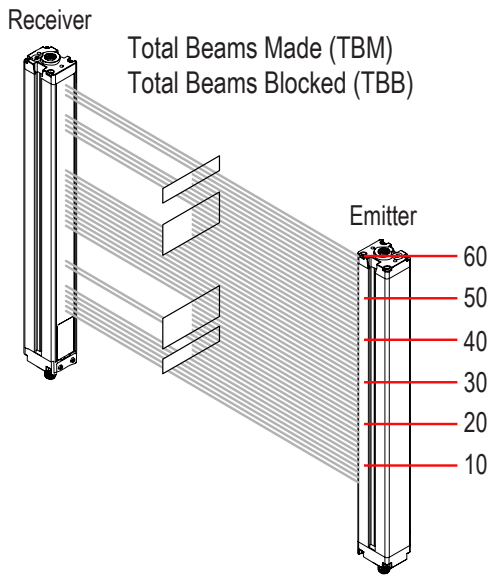

In Total Beams Made mode, 38 of 60 possible beams are made.

In Total Beams Blocked mode, 22 of 60 possible beams are blocked.

Outputs

In addition to the serial output (see above), all models have two analog outputs and two discrete outputs.

The analog outputs are 4–20 mA or 0–10 V, depending on the model. They may be configured for either a positive or negative slope via DIP switch or PC interface.

Discrete output 1 is always used for measurement; discrete output 2 may be used either for alarm or measurement operation (selectable via DIP switch or PC interface). When the receiver interface is used, discrete output 1 follows the operation of analog output 1 (it conducts when the analog output senses a target is present). When the PC interface is used for configuration, both discrete outputs have full configurability, including measurement mode, NPN or PNP polarity, and normally open or normally closed operation.

Analog Output Configuration

Analog output configuration assigns analog outputs 1 and 2 to one of the measurement modes described in Measurement Mode Selection. When the selected measurement mode involves first or last beam blocked or made (unblocked), the assigned output will vary in proportion to the beam number identified during a scan. When the measurement mode involves total beams blocked or made, that assigned output will vary in proportion to the total beams counted during a scan.

Analog outputs may have a filter setting (to smooth the output) and Zero Value (to specify the output value when the measurement mode value is zero) set in the PC interface.

Discrete Output Configuration

Discrete Output 1; Receiver Interface

When the receiver interface is used for configuration, the measurement mode assigned to discrete output 1 is the same as that assigned to analog output 1. When the analog output detects a target present, discrete output 1 conducts (normally open).

Discrete Output 2; Receiver Interface

Discrete output 2 (only) has two options: alarm and complementary (measurement) operation.

Alarm—Output 2 energizes when the receiver detects a sensor error (such as a disconnected cable) or whenever the excess gain of one or more beams becomes marginal.
Complementary (Measurement)—Discrete output 2 operation is complementary to discrete output 1 (when output 1 is ON, output 2 is OFF, and vice versa).

Discrete Output 1 and 2 Configuration; PC Interface

When the PC interface is used for configuration, the discrete outputs have more options: either discrete output can be assigned to any of the measurement modes, high and low set points can be added, the outputs can be inverted, and hysteresis values can be set, as well as a scan number to smooth output performance. Discrete output 2 can be assigned to alarm mode via the PC interface also.

Refer to the instruction manual for more information.

© Banner Engineering Corp. All rights reserved.
www.bannerengineering.com

Specifications

Emitter/Receiver Range

Standard models: 400 mm to 4 m (16 in to 13 ft)

Short range, low contrast models: 30 mm to 1500 mm (1.18 in to 59 in)

Supply Power Requirements

Emitter/Receiver Pair (Exclusive of Discrete Load): Less than 9 W

Power-up delay: 2 seconds

Current Draw at 24 V DC

Length (mm)	Emitter (mA)	Receiver (mA)
150	10	10
300	20	25
450	30	40
600	40	60
750	50	75
900	60	90
1050	70	105
1200	80	120
1350	85	135
1500	95	150
1650	105	170
1800	115	185
1950	125	200
2100	135	215
2250	140	230
2400	150	245

Serial Communication Interface

EIA-485 Modbus RTU (up to 15 nodes per communication ring)

RTU binary format

Baud Rate: 9600, 19.2K or 38.4K 8

Data Bits, 1 Stop Bit, and Even, Odd, or 2 Stop Bits and No Parity

Minimum Object Detection Size

Straight Scan, Low-Contrast: 5 mm (0.2 in)

Straight Scan, High-Excess-Gain: 10 mm (0.4 in)

See "Scanning Method" on page 6 for other scan mode values; size is tested using a rod.

Beam Spacing

5 mm (0.2 in)

Field of View

Nominally ±3°

Light Source

Infrared LED

System Configuration (Receiver Interface)

6-position DIP switch: Used to set scanning type, measurement modes, analog slope, and discrete output 2 function (see "Configuration via DIP Switch or PC Interface" on page 6)

Push Buttons: Two momentary push buttons for alignment and gain level selection

System Configuration

PC Interface: Supplied software provide all configuration options of receiver interface, plus additional functionality

Supply Voltage (Limit Values)

Emitter: 12 V DC to 30 V DC

Receiver Analog Current Models: 12 V DC to 30 V DC

Receiver Analog Voltage Models: 15 V DC to 30 V DC

Teach Input (Receiver Gray Wire)

Low: 0 to 2 V

High: 6 to 30 V or open (input impedance 22 K ohms)

Sensor Positional Resolution

Straight Scan: 5 mm (0.2 in)

Double-Edge Scan: 2.5 mm (0.1 in)

Single-Edge Scan: 2.5 mm (0.1 in)

Two Analog Outputs

Voltage Sourcing: 0 to 10 V (maximum current load of 5 mA)

Current Sourcing: 4 to 20 mA (maximum resistance load = $(V_{supply}-3)/0.020$)

Scan Time

Scan times depend on scan mode and sensor length. Straight scan times range from 2.8 to 26.5 ms. For all combinations, see "Maximum Scan Times in SIO Mode" on page 8.

Two Discrete Outputs

Protected against false pulse on power-up and continuous overload or short circuit.

Solid-State NPN or PNP (current sinking or sourcing)

Rating: 100 mA maximum each output

OFF-State Leakage Current: NPN: less than 200 µA at 30 V DC; PNP: less than 10 µA at 30 V DC

ON-State Saturation Voltage: NPN: less than 1.6 V at 100 mA; PNP: less than 2.0 V at 100 mA

Connections

Communication Interface: The receiver uses a PVC jacketed, 5-conductor 22-gauge quick-disconnect cable, 5.4 mm diameter

Other sensor connections: 8-conductor quick-disconnect cables (one each for emitter and receiver), ordered separately; PVC-jacketed cables measure 5.8 mm diameter, have shield wire; 22-gauge conductors

Construction

Aluminum housing with clear-anodized finish; acrylic lens cover

Environmental Rating

IP65

Operating Conditions

–40 °C to +70 °C (–40 °F to +158 °F)

95% at +50 °C maximum relative humidity (non-condensing)

Certifications

Banner Engineering BV
Park Lane, Culliganlaan 2F bus 3
1831 Diegem, BELGIUM

Turck Banner LTD Blenheim House
Blenheim Court
Wickford, Essex SS11 8YT
GREAT BRITAIN

IO-Link®

© Banner Engineering Corp. All rights reserved.
www.bannerengineering.com

FCC Part 15 Class A for Unintentional Radiators

This equipment has been tested and found to comply with the limits for a Class A digital device, pursuant to Part 15 of the FCC Rules. These limits are designed to provide reasonable protection against harmful interference when the equipment is operated in a commercial environment. This equipment generates, uses, and can radiate radio frequency energy and, if not installed and used in accordance with the instruction manual, may cause harmful interference to radio communications. Operation of this equipment in a residential area is likely to cause harmful interference in which case the user will be required to correct the interference at his own expense.

(Part 15.21) Any changes or modifications not expressly approved by the party responsible for compliance could void the user's authority to operate this equipment.

Industry Canada ICES-003(A)

This device complies with CAN ICES-3 (A)/NMB-3(A). Operation is subject to the following two conditions: 1) This device may not cause harmful interference; and 2) This device must accept any interference received, including interference that may cause undesired operation.

Cet appareil est conforme à la norme NMB-3(A). Le fonctionnement est soumis aux deux conditions suivantes : (1) ce dispositif ne peut pas occasionner d'interférences, et (2) il doit tolérer toute interférence, y compris celles susceptibles de provoquer un fonctionnement non souhaité du dispositif.

Dimensions

All measurements are listed in millimeters, unless noted otherwise. The measurements provided are subject to change.

Dimensions drawing

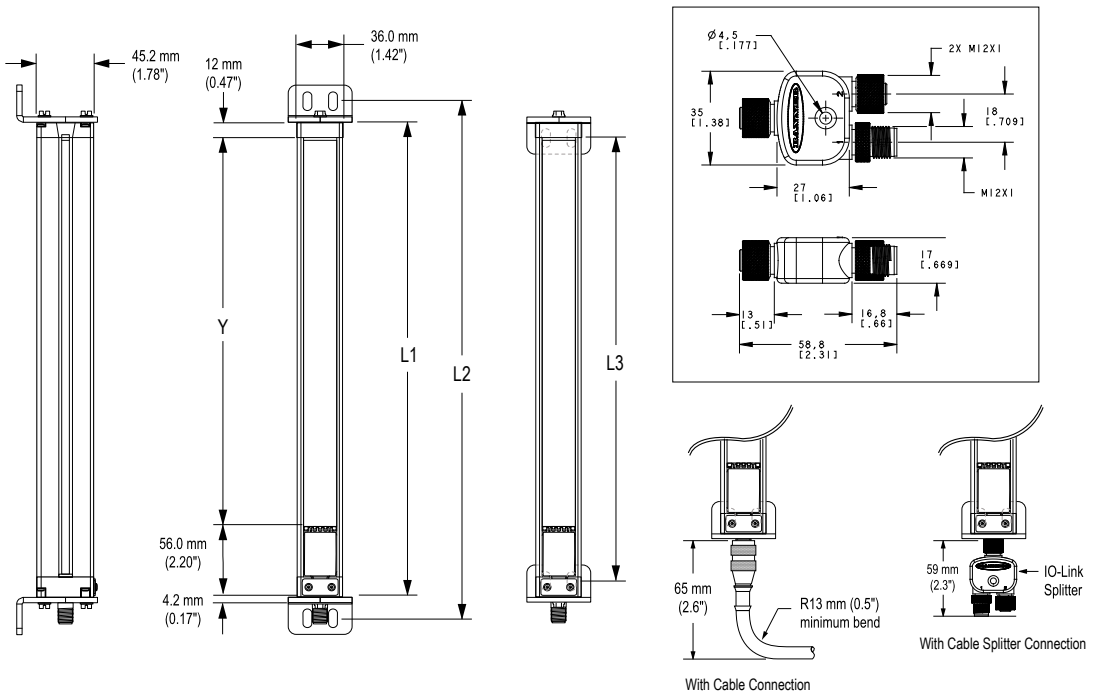

Dimensions for each model

Emitter or Receiver Model	Housing Length L1	Distance Between Bracket Holes L2 L3		Defined Area Y
EA5..150..	227 mm (8.9 in)	260 mm (10.2 in)	199 mm (7.8 in)	150 mm (5.9 in)
EA5..300..	379 mm (14.9 in)	412 mm (16.2 in)	351 mm (13.8 in)	300 mm (11.8 in)
EA5..450..	529 mm (20.8 in)	562 mm (22.1 in)	501 mm (19.7 in)	450 mm (17.7 in)
EA5..600..	678 mm (26.7 in)	704 mm (27.7 in)	650 mm (25.6 in)	600 mm (23.6 in)
EA5..750..	828 mm (32.6 in)	861 mm (33.9 in)	800 mm (31.5 in)	750 mm (29.5 in)
EA5..900..	978 mm (38.5 in)	1011 mm (39.8 in)	950 mm (37.4 in)	900 mm (35.4 in)
EA5..1050..	1128 mm (44.4 in)	1161 mm (45.7 in)	1100 mm (43.3 in)	1050 mm (41.3 in)
EA5..1200..	1278 mm (50.3 in)	1311 mm (51.6 in)	1250 mm (49.2 in)	1200 mm (47.2 in)
EA5..1500..	1578 mm (62.1 in)	1611 mm (63.4 in)	1550 mm (61.0 in)	1500 mm (59.1 in)
EA5..1800..	1878 mm (73.9 in)	1911 mm (75.2 in)	1850 mm (72.8 in)	1800 mm (70.9 in)
EA5..2100..	2178 mm (85.7 in)	2211 mm (87.0 in)	2150 mm (84.6 in)	2100 mm (82.7 in)

Continued on page 16

© Banner Engineering Corp. All rights reserved.
www.bannerengineering.com

Continued from page 15

Emitter or Receiver Model	Housing Length L1	Distance Between Bracket Holes L2 L3		Defined Area Y
EA5..2400..	2478 mm (97.6 in)	2511 mm (98.9 in)	2450 mm (96.4 in)	2400 mm (94.5 in)

Standard Bracket Dimensions

Dimensions are identical for model EZA-MBK-11N stainless steel brackets.

EZA-MBK-11

- Two end-cap replacement brackets for one emitter/receiver
- 8-ga. cold-rolled steel with black corrosion-resistant zinc chromate finish
- M5 and M6 mounting hardware
- CAD Files: DXF, PDF, IGS, STP

Hole center spacing: A to B = 20
Hole size: A , B = 15 × 7, C = ø 21.5

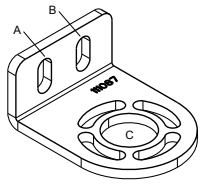

Supplied with emitters and receivers over 1050 mm.

EZA-MBK-12

- Two-piece center bracket for one emitter/receiver
- 8-ga. cold-rolled steel with black corrosion-resistant zinc chromate finish
- M5 and M6 mounting hardware
- CAD Files: DXF, PDF, IGS, STP

Hole center spacing: A = 20, A to B = 36
Hole size: A = ø 7, B = ø 8.3

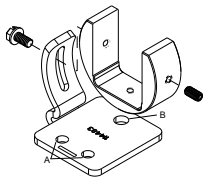

Accessories

Replacement Parts

Description		Model
Access cover with label - receiver		**EA5-ADR-1**
Access cover security plate (includes 2 screws, wrench)		**EZA-TP-1**
Wrench, security		**EZA-HK-1**
Standard bracket kit with hardware (includes 2 end brackets and hardware to mount to MSA Series stands)	Black	**EZA-MBK-11**
	Stainless Steel	**EZA-MBK-11N**
Center bracket kit (includes 1 bracket and hardware to mount to MSA Series stands)		**EZA-MBK-12**

Cordsets and Connections

8-Pin Single-Ended M12 Female Shielded Cordsets					
Model	**Length**	**Style**	**Dimensions**	**Pinout (Female)**	
MAQDC-806	2 m (6.56 ft)	Straight	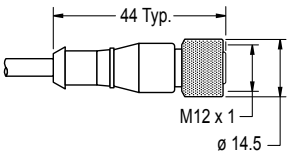	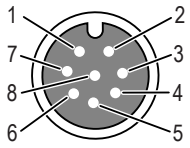	
MAQDC-815	5 m (16.4 ft)				
MAQDC-830	10 m (32.81 ft)				
MAQDC-850	15 m (49.21 ft)			1 = White 2 = Brown 3 = Green 4 = Yellow	5 = Gray 6 = Pink 7 = Blue 8 = Red

© Banner Engineering Corp. All rights reserved.
www.bannerengineering.com

8-Pin M12 Female Branch to Male Trunk Flat Junction Splitter Cordsets			
Model	**Trunk (Male)**	**Branches (Female)**	**Pinout**
CSB-M1280M1280	No trunk	No branches	Male 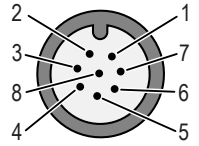 Female 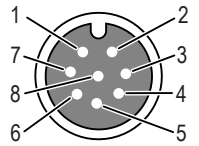 1 = Brown 2 = Or/Bk 3 = Orange 4 = White 5 = Black 6 = Blue 7 = Gn/Ye 8 = Violet
CSB-M1281M1281	0.3 m (1 ft)	2 x 0.3 m (1 ft)	
CSB-M1288M1281	2.44 m (8 ft)		
CSB-M12815M1281	4.57 m (15 ft)		
CSB-M12825M1281	7.62 m (25 ft)		
CSB-UNT825M1281	7.62 m (25 ft) Unterminated		
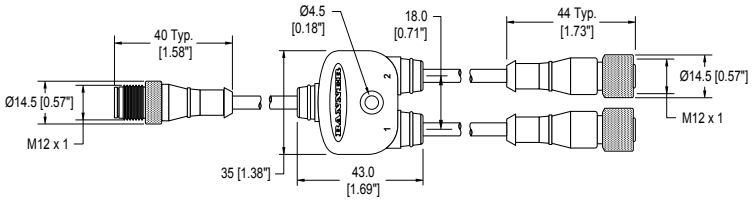			

Communication Connections				
Model	**Description**		**Image**	**Pinout**
Communications Cables				
MQDMC-506	Straight male connector, 5-pin M12	2 m (6.5 ft) long	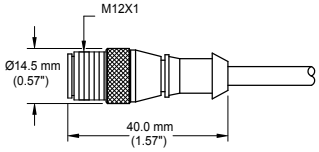	Male Connector Shown 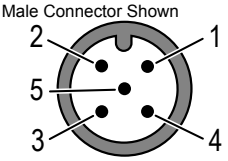
MQDMC-515		5 m (15 ft) long		
MQDMC-530		9 m (30 ft) long		
MQDMC-506RA	Right-angle male connector, 5-pin M12	2 m (6.5 ft) long	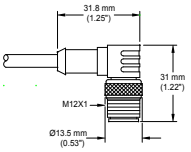	
MQDMC-515RA		5 m (15 ft) long		
MQDMC-530RA		9 m (30 ft) long		
4-Pin Threaded M12/M12 Cordsets - Double Ended				
MQDEC-403SS	Male Straight / Female Straight	0.9 m	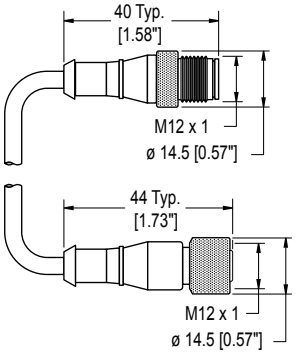	Female 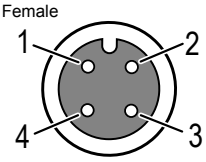 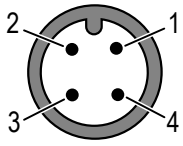 Male
MQDEC-406SS		1.8 m		
MQDEC-412SS		3.6 m		
MQDEC-420SS		6.1 m		
MQDEC-430SS		9.2 m		
MQDEC-450SS		15.2 m		

Continued on page 18

© Banner Engineering Corp. All rights reserved.
www.bannerengineering.com

Continued from page 17

Communication Connections				
Model	**Description**		**Image**	**Pinout**
MQDEC-403RS	Male Right-Angle / Female Straight	0.9 m	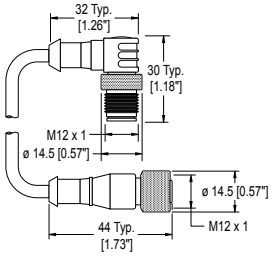	
MQDEC-406RS		1.8 m		
MQDEC-412RS		3.6 m		
MQDEC-420RS		6.1 m		
MQDEC-430RS		9.2 m		
MQDEC-450RS		15.2 m		
USB Serial Adapter			**Dimensions**	
INTUSB485-1	MODBUS 485-RTU model	For connection of 5-pin communications cable to computer USB port	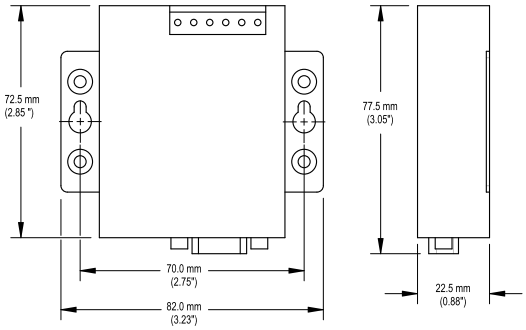	
EZA-USB485-01				

Alignment Aids

Model	Description
LAT-1-SS	Self-contained visible-beam laser tool for aligning any EZ-ARRAY emitter/receiver pair. Includes retroreflective target material and mounting clip.
EZA-LAT-SS	Replacement adaptor (clip) hardware for EZ-ARRAY models
EZA-LAT-2	Clip-on retroreflective LAT target
BRT-THG-2-100	2-inch retroreflective tape, 100 ft
BT-1	Beam Tracker

Accessory Mounting Brackets and Stands

EZA-MBK-20

- Adapter brackets for mounting to engineered/slotted aluminum framing such as 80/20™ and Unistrut™. Angled slots allow mounting to 20 mm to 40 mm dual channel and center slot. allows mounting to single-channel framing
- Retrofit for Banner MINI-SCREEN
- Order **EZA-MBK-20U** for bracket with M5 and M6 mounting hardware
- CAD Files: DXF, PDF, IGS, STP

Hole size: A = ø7 × 25 (2); B = ø7 × 18; C = ø21.5; D = ø4.8 × 10.2;

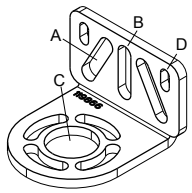

See "Replacement Parts" on page 16 for standard brackets. Order one EZA-MBK-20 bracket per sensor, two per pair.

NOTE: Standard brackets shipped with sensors connect directly to MSA series stand, using hardware included with the stands.

Banner Engineering Corp Limited Warranty

Banner Engineering Corp. warrants its products to be free from defects in material and workmanship for one year following the date of shipment. Banner Engineering Corp. will repair or replace, free of charge, any product of its manufacture which, at the time it is returned to the factory, is found to have been defective during the warranty period. This warranty does not cover damage or liability for misuse, abuse, or the improper application or installation of the Banner product.

© Banner Engineering Corp. All rights reserved.
www.bannerengineering.com

THIS LIMITED WARRANTY IS EXCLUSIVE AND IN LIEU OF ALL OTHER WARRANTIES WHETHER EXPRESS OR IMPLIED (INCLUDING, WITHOUT LIMITATION, ANY WARRANTY OF MERCHANTABILITY OR FITNESS FOR A PARTICULAR PURPOSE), AND WHETHER ARISING UNDER COURSE OF PERFORMANCE, COURSE OF DEALING OR TRADE USAGE.

This Warranty is exclusive and limited to repair or, at the discretion of Banner Engineering Corp., replacement. **IN NO EVENT SHALL BANNER ENGINEERING CORP. BE LIABLE TO BUYER OR ANY OTHER PERSON OR ENTITY FOR ANY EXTRA COSTS, EXPENSES, LOSSES, LOSS OF PROFITS, OR ANY INCIDENTAL, CONSEQUENTIAL OR SPECIAL DAMAGES RESULTING FROM ANY PRODUCT DEFECT OR FROM THE USE OR INABILITY TO USE THE PRODUCT, WHETHER ARISING IN CONTRACT OR WARRANTY, STATUTE, TORT, STRICT LIABILITY, NEGLIGENCE, OR OTHERWISE.**

Banner Engineering Corp. reserves the right to change, modify or improve the design of the product without assuming any obligations or liabilities relating to any product previously manufactured by Banner Engineering Corp. Any misuse, abuse, or improper application or installation of this product or use of the product for personal protection applications when the product is identified as not intended for such purposes will void the product warranty. Any modifications to this product without prior express approval by Banner Engineering Corp will void the product warranties. All specifications published in this document are subject to change; Banner reserves the right to modify product specifications or update documentation at any time. Specifications and product information in English supersede that which is provided in any other language. For the most recent version of any documentation, refer to: www.bannerengineering.com.

For patent information, see www.bannerengineering.com/patents.

© Banner Engineering Corp. All rights reserved.
www.bannerengineering.com