MODEL NO.	"L"	P/N
PIFM43T5MLHRH	1000+10/-0	13656

NOTE - *THIS ASSEMBLY IS SUPPLIED WITH A LEFT AND RIGHT SIDE FOR OPPOSED SENSING.

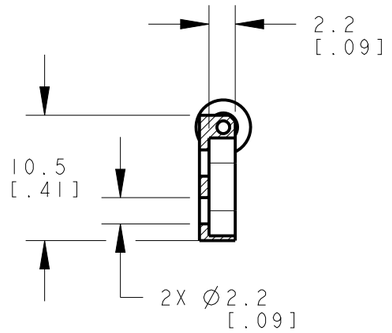

SECTION A-A

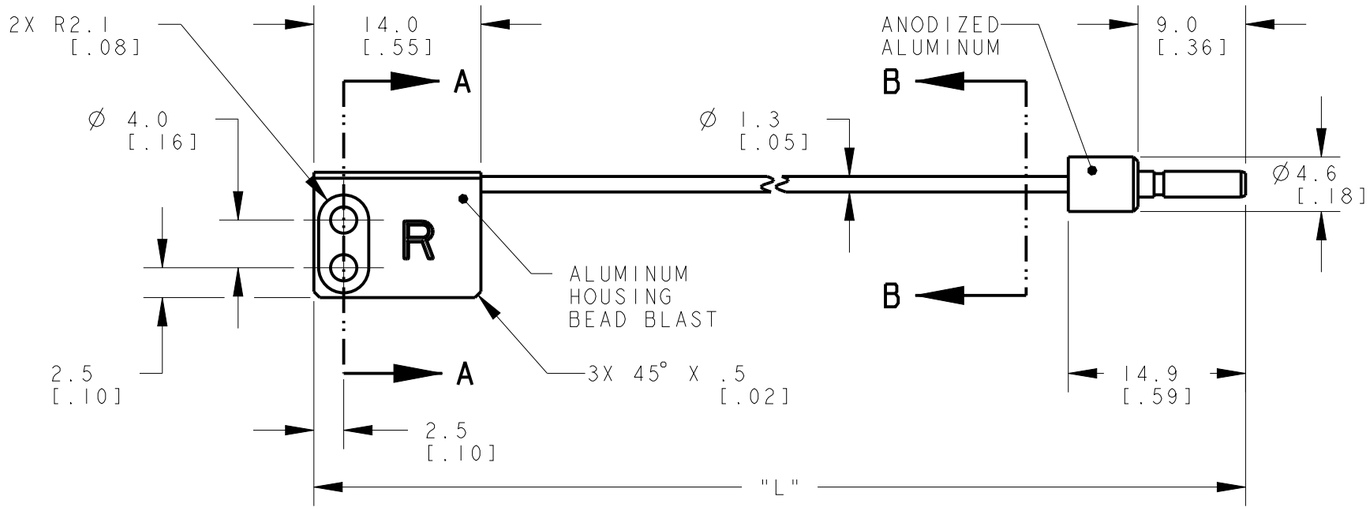

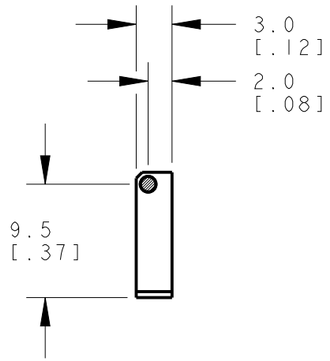

SECTION B-B



NOTES:
1. ALL DIMENSIONS ARE MILLIMETERS [INCHES] UNLESS OTHERWISE NOTED.
2. REFER TO "www.bannerengineering.com" FOR ADDITIONAL DATA AND SPECIFICATIONS.

This drawing is the property of BANNER ENGINEERING CORP. Any use or reproduction, in any form, without prior written permission of Banner is prohibited.
© 2015 Banner Engineering Corp.

THIRD ANGLE PROJECTION

BANNER ENGINEERING CORP.
www.bannerengineering.com

TITLE
PIFM43T5MLHRH

SIZE	DRAWING NO.	REV.
B	193337	A
SCALE 2:1		SHEET 1 OF 1

CREO

ПРОМЭЛЕКТРОНИКА/ sales@prom-elec.com