Features

High-Intensity LED Ring Light for use with VE Series vision sensors



- Compact ring light for VE Series vision sensors
- Four extremely bright LEDs for illumination of targets from 0.15 meters to beyond 2 meters (0.49 feet to 6.56 feet)
- Continuous or strobed operation
- Optically isolated strobe signal
- Fixed or adjustable intensity, depending on model
- Maintenance-free, rugged construction
- Evenly and intensely illuminates a 610 millimeters (24 inches) diameter at 1 meter (3.28 feet)

IMPORTANT: Read the following instructions before operating the light. Please download the complete VE Series High Intensity Ring Lights technical documentation, available in multiple languages, from www.bannerengineering.com for details on the proper use, applications, Warnings, and installation instructions of this device.

IMPORTANT: Lea el siguiente instructivo antes de operar el luminario. Por favor descargue desde www.bannerengineering.com toda la documentación técnica de los VE Series High Intensity Ring Lights, disponibles en múltiples idiomas, para detalles del uso adecuado, aplicaciones, advertencias, y las instrucciones de instalación de estos dispositivos.

IMPORTANT: Lisez les instructions suivantes avant d'utiliser le luminaire. Veuillez télécharger la documentation technique complète des VE Series High Intensity Ring Lights sur notre site www.bannerengineering.com pour les détails sur leur utilisation correcte, les applications, les notes de sécurité et les instructions de montage.

Models

Model	LED Color	Intensity Adjustment	Connection
LEDIRV70XD5-XM	Infrared, 850 nm	Fixed	300 mm (12 in) cable with a 3-pin M8 male quick-disconnect connector Connects directly to the VE Series smart cameras .
LEDRRV70XD5-PM	Visible red, 620 nm to 630 nm	Potentiometer	
LEDWRV70XD5-PM	White, 5000 K to 8300 K		

For a list of discontinued models, see Discontinued Models.

The following caution applies to ultraviolet, 395 nm models:

CAUTION:
Risk Group 2: UV Emitted from this product.

Eye or skin irritation may result from exposure. Use appropriate shielding and eye protection. Risk Group 2 (RG 2) products generally do not pose a realistic optical hazard if aversion responses limit the exposure duration or where lengthy exposures are unrealistic.

- IEC 62471

NOTE: Ring lights are not compatible with VELC..- Sealed Lens Covers. Use another lighting technique if an IP67 rating is needed for your application.

Install the Ring Light

1. Attach the ring light bracket to the sides of the VE Series vision sensor using the provided hardware kit.
2. Connect the cable to the sensor.

Original Instructions
15-Jun-26

© Banner Engineering Corp. All rights reserved.
www.bannerengineering.com

192657
p/n: 192657 Rev. E

ПРОМЭЛЕКТРОНИКА/ sales@prom-elec.com

Light Intensity Adjustment

Turn the 270° intensity potentiometer with a small flat-blade screwdriver to adjust the light's intensity.

1. Apply power to the light and turn the potentiometer all the way clockwise for maximum intensity.
2. If the object to be sensed is too bright at maximum intensity, turn the potentiometer counterclockwise, a little at a time, testing with the target object, until the correct brightness is achieved.

Specifications

Light Source
Four high-intensity LEDs; see models table for wavelengths

Illumination
610 mm (24 in) diameter usable light pattern at 1 m (3.28 ft)

Strobe
Optically isolated

Supply Voltage and Current
Operating Voltage: 24 V DC ±10%
Strobe Voltage: 5 V DC to 24 V DC at 15 mA maximum
Current Draw at Full Intensity: 350 mA maximum
Built-in constant current regulator for LEDs
Potentiometer controls variable intensity for "P" models
See the electrical characteristics on the product label.

Strobe Type
Active low

Connection
300 mm (12 in) cable with a 3-pin M8 male quick-disconnect connector

Construction
Housing: Aluminum, black anodized
Window: Acrylic, clear with frosted diffusing surface on inside
Bracket: Cold-rolled steel with black gloss e-coat plating. Attaches the ring light directly to the VE 200 Series vision sensor with four included M3 × 6 mm screws

Useful Life
When operated within specifications, output decreases less than 30% after 50,000 hours for visible and IR models, 20,000 hours for UV models

Operating Conditions
Temperature: 0 °C to +50 °C (+32 °F to +122 °F)
Humidity: 90% maximum relative humidity (non-condensing)

Environmental Rating
IP50

Certifications
Banner Engineering BV
Park Lane, Culliganlaan 2F bus 3
1831 Diegem, BELGIUM

Required Overcurrent Protection

WARNING: Electrical connections must be made by qualified personnel in accordance with local and national electrical codes and regulations.

Overcurrent protection is required to be provided by end product application per the supplied table.
Overcurrent protection may be provided with external fusing or via Current Limiting, Class 2 Power Supply.
Supply wiring leads < 24 AWG shall not be spliced.
For additional product support, go to www.bannerengineering.com.

Supply Wiring (AWG)	Required Overcurrent Protection (A)	Supply Wiring (AWG)	Required Overcurrent Protection (A)
20	5.0	26	1.0
22	3.0	28	0.8
24	2.0	30	0.5

Light Characteristics
Values shown are typical at 25°C.

	Lumens				mWatts	
	Cool White	Green	Red	Blue	IR	UV395
LEDxR70	390	340	240	130	945	475

© Banner Engineering Corp. All rights reserved.
www.bannerengineering.com

Optical Data

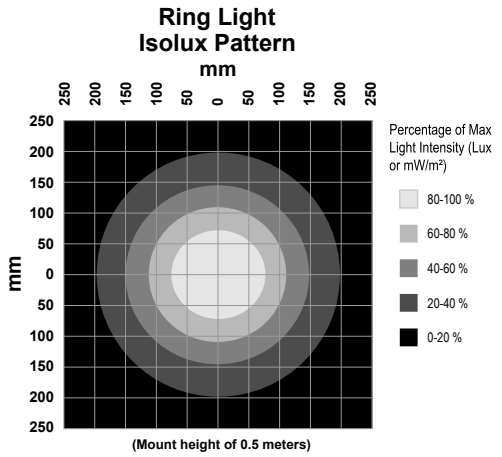

Values shown are typical at 25 °C.

Distance (m)	Max Center Beam Lux (lux)				Max Center Beam Irradiance (mW/m²)		Beam Width (m)	
	Cool White	Green	Red	Blue	IR	UV395	Vertical (Spread 29.6°)	Horizontal (Spread 28.4°)
0.25	16,620	14,489	10,228	5,540	40,272	20,242	0.13	0.13
0.5	5,150	4,490	3,169	1,717	12,479	6,272	0.26	0.25
1	1,125	981	692	375	2,726	1,370	0.53	0.51

Dimensions

All measurements are listed in millimeters [inches], unless noted otherwise. The measurements provided are subject to change.

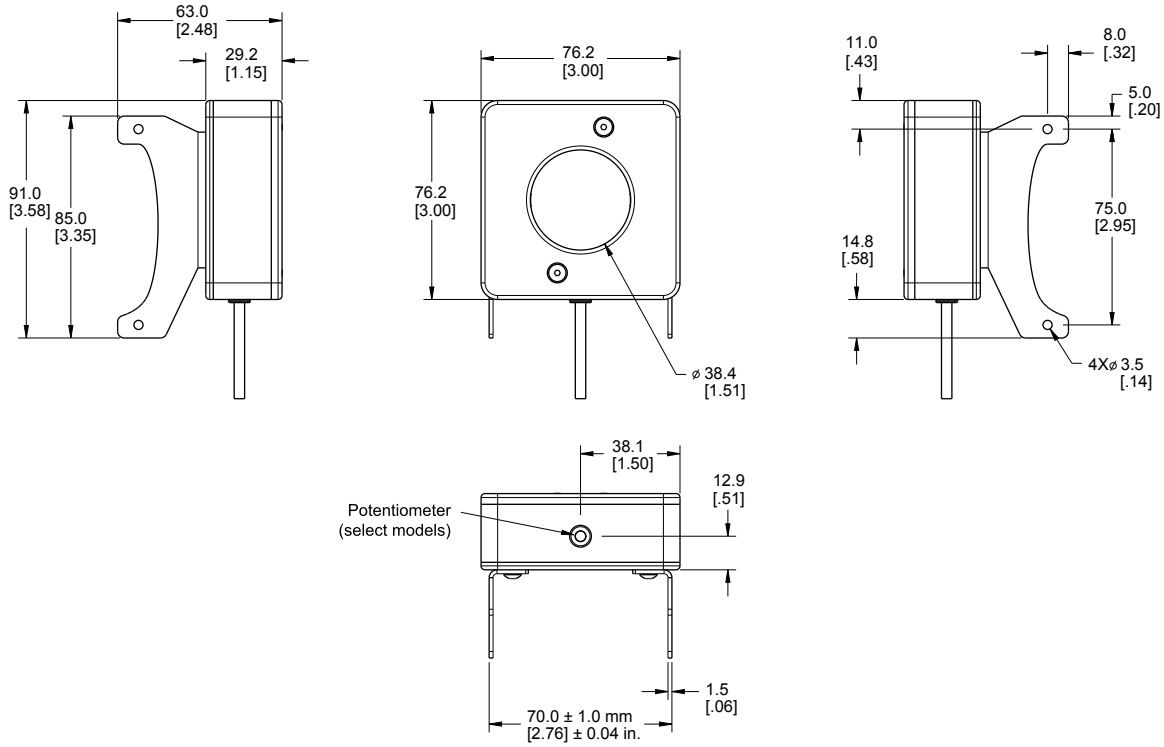

© Banner Engineering Corp. All rights reserved.
www.bannerengineering.com

Clean the Light

Regularly remove dust, dirt, or fingerprints from the light source.

1. Blow off dust using anti-static compressed air.
2. If necessary, use a lens cloth and lens cleaner or window cleaner to wipe off remaining debris.

IMPORTANT: Do not use any other chemicals for cleaning the light source.

Product Support and Maintenance

Discontinued Models

The following models are no longer available for order but are still covered by the information in this document.

Model	LED Color	Intensity Adjustment	Connection
LEDRRV70XD5-XM	Visible red, 620 nm to 630 nm	Fixed	300 mm (12 in) cable with a 3-pin M8 male quick-disconnect connector Connects directly to the VE Series smart cameras .
LEDWRV70XD5-XM	White, 5000 K to 8300 K		
LEDBRV70XD5-XM	Visible blue, 465 nm to 485 nm		
LEDGRV70XD5-XM	Visible green, 520 nm to 535 nm		
LEDUV395RV70XD5-XM	Ultraviolet, 395 nm		
LEDBRV70XD5-PM	Visible blue, 465 nm to 485 nm	Potentiometer	
LEDGRV70XD5-PM	Visible green, 520 nm to 535 nm		
LEDIRV70XD5-PM	Infrared, 850 nm		
LEDUV395RV70XD5-PM	Ultraviolet, 395 nm		

Banner Engineering Corp Limited Warranty

Banner Engineering Corp. warrants its products to be free from defects in material and workmanship for one year following the date of shipment. Banner Engineering Corp. will repair or replace, free of charge, any product of its manufacture which, at the time it is returned to the factory, is found to have been defective during the warranty period. This warranty does not cover damage or liability for misuse, abuse, or the improper application or installation of the Banner product.

THIS LIMITED WARRANTY IS EXCLUSIVE AND IN LIEU OF ALL OTHER WARRANTIES WHETHER EXPRESS OR IMPLIED (INCLUDING, WITHOUT LIMITATION, ANY WARRANTY OF MERCHANTABILITY OR FITNESS FOR A PARTICULAR PURPOSE), AND WHETHER ARISING UNDER COURSE OF PERFORMANCE, COURSE OF DEALING OR TRADE USAGE.

This Warranty is exclusive and limited to repair or, at the discretion of Banner Engineering Corp., replacement. **IN NO EVENT SHALL BANNER ENGINEERING CORP. BE LIABLE TO BUYER OR ANY OTHER PERSON OR ENTITY FOR ANY EXTRA COSTS, EXPENSES, LOSSES, LOSS OF PROFITS, OR ANY INCIDENTAL, CONSEQUENTIAL OR SPECIAL DAMAGES RESULTING FROM ANY PRODUCT DEFECT OR FROM THE USE OR INABILITY TO USE THE PRODUCT, WHETHER ARISING IN CONTRACT OR WARRANTY, STATUTE, TORT, STRICT LIABILITY, NEGLIGENCE, OR OTHERWISE.**

Banner Engineering Corp. reserves the right to change, modify or improve the design of the product without assuming any obligations or liabilities relating to any product previously manufactured by Banner Engineering Corp. Any misuse, abuse, or improper application or installation of this product or use of the product for personal protection applications when the product is identified as not intended for such purposes will void the product warranty. Any modifications to this product without prior express approval by Banner Engineering Corp will void the product warranties. All specifications published in this document are subject to change; Banner reserves the right to modify product specifications or update documentation at any time. Specifications and product information in English supersede that which is provided in any other language. For the most recent version of any documentation, refer to: www.bannerengineering.com.

For patent information, see www.bannerengineering.com/patents.

Mexican Importer

Banner Engineering de Mèxico, S. de R.L. de C.V. | David Alfaro Siqueiros 103 Piso 2 Valle oriente | San Pedro Garza Garcia Nuevo Leòn, C. P. 66269

81 8363.2714

© Banner Engineering Corp. All rights reserved.
www.bannerengineering.com