# TL50H High Brightness Tower Light

## Features

*Multi-Color General-Purpose or Audible Indicators*

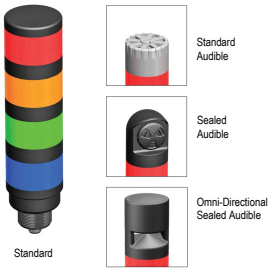


- Similar in design and construction to standard TL50 Tower Lights, but more than 4 times brighter, improving visibility in areas with high levels of ambient light
- Rugged, cost-effective, and easy-to-install multi-segment indicators
- Illuminated segments provide easy-to-see operator guidance and indication of equipment status
- Displays up to 5 colors
- Available in black or light gray housing
- Audible models available with standard, sealed, or omni-directional audible element
- Compact devices are completely self-contained, no controller needed
- 18 V DC to 30 V DC or 24 V AC operation
- No assembly required

## Non-Audible Models

| Model[1] | # of LED Colors | LED Colors[2] | Connection[3] | Inputs |
|---|---|---|---|---|
| **TL50HRQ** | 1 | Red | Integral 4-pin M12 male quick-disconnect connector | Bimodal (NPN or PNP) |
| **TL50HGRQ** | 2 | Green, Red | | |
| **TL50HGYRQ** | 3 | Green, Yellow, Red | | |
| **TL50HBGYRQ** | 4 | Blue, Green, Yellow, Red | Integral 5-pin M12 male quick-disconnect connector | |
| **TL50HWBGYRQ** | 5 | White, Blue, Green, Yellow, Red | Integral 8-pin M12 male quick-disconnect connector | |

## Audible Models

*Standard Audible Models[1]*

| Model | # of LED Colors | LED Colors[2] | Connection[3] | Inputs |
|---|---|---|---|---|
| **TL50HRAQ** | 1 | Red | Integral 4-pin M12 male quick-disconnect connector | Bimodal (NPN or PNP) |
| **TL50HGRAQ** | 2 | Green, Red | | |
| **TL50HGYRAQ** | 3 | Green, Yellow, Red | Integral 5-pin M12 male quick-disconnect connector | |
| **TL50HBGYRAQ** | 4 | Blue, Green, Yellow, Red | Integral 8-pin M12 male quick-disconnect connector | |

*Sealed Audible Models[1]*

| Continuous | Pulsed at 1.6 Hz | Staccato | # of LED Colors | LED Colors[2] | Connection [3] | Inputs |
|---|---|---|---|---|---|---|
| **TL50HRALSQ** | **TL50HRALS3Q** | **TL50HRALS4Q** | 1 | Red | Integral 4-pin M12 male quick-disconnect connector | Bimodal (NPN or PNP) |
| **TL50HGRALSQ** | **TL50HGRALS3Q** | **TL50HGRALS4Q** | 2 | Green, Red | | |
| **TL50HGYRALSQ** | **TL50HGYRALS3Q** | **TL50HGYRALS4Q** | 3 | Green, Yellow, Red | Integral 5-pin M12 male quick-disconnect connector | |
| **TL50HBGYRALSQ** | **TL50HBGYRALS3Q** | **TL50HBGYRALS4Q** | 4 | Blue, Green, Yellow, Red | Integral 8-pin M12 male quick-disconnect connector | |

*Omni-Directional Sealed Audible Models[1]*

| Continuous | Pulsed at 1.6 Hz | Staccato | # of LED Colors | LED Colors[2] | Connection [3] | Inputs |
|---|---|---|---|---|---|---|
| **TL50HRAOSQ** | **TL50HRAOS3Q** | **TL50HRAOS4Q** | 1 | Red | Integral 4-pin M12 male quick-disconnect connector | Bimodal (NPN or PNP) |
| **TL50HGRAOSQ** | **TL50HGRAOS3Q** | **TL50HGRAOS4Q** | 2 | Green, Red | | |
| **TL50HGYRAOSQ** | **TL50HGYRAOS3Q** | **TL50HGYRAOS4Q** | 3 | Green, Yellow, Red | Integral 5-pin M12 male quick-disconnect connector | |
| **TL50HBGYRAOSQ** | **TL50HBGYRAOS3Q** | **TL50HBGYRAOS4Q** | 4 | Blue, Green, Yellow, Red | Integral 8-pin M12 male quick-disconnect connector | |

(1) Models with black housing are listed. For gray housing, add the suffix "C" at the end of the cabled model number or before the "QP" in 150 mm (6 in) PVC cable model numbers. For example, TL50HRC or TL50HRCQ.
(2) The first color listed is the bottom color, going up in successive order.
(3)

- To order the 2 m (6.5 ft) PVC cable model, omit the suffix "Q" in the model number. For example, TL50HR.
- To order the 150 mm (6 in) PVC cable model, replace the suffix "Q" with "QP" in the model number. For example, TL50HRQP.
- Models with a quick-disconnect connector require a mating cordset.

Original Instructions
21-Jul-25

© Banner Engineering Corp. All rights reserved.
www.bannerengineering.com

152837
p/n: 152837 Rev. Q

ПРОМЭЛЕКТРОНИКА/ sales@prom-elec.com

*Omni-Directional Sealed Audible Models with Intensity Adjustment*[1]

| Continuous | Pulsed at 1.6 Hz | Staccato | # of LED Colors | LED Colors[2] | Connection [3] | Inputs |
|---|---|---|---|---|---|---|
| TL50HRAOSIQ | TL50HRAOS3IQ | TL50HRAOS4IQ | 1 | Red | Integral 4-pin M12 male quick-disconnect connector | Bimodal (NPN or PNP) |
| TL50HGRAOSIQ | TL50HGRAOS3IQ | TL50HGRAOS4IQ | 2 | Green, Red | | |
| TL50HGYRAOSIQ | TL50HGYRAOS3IQ | TL50HGYRAOS4IQ | 3 | Green, Yellow, Red | Integral 5-pin M12 male quick-disconnect connector | |
| TL50HBGYRAOSIQ | TL50HBGYRAOS3IQ | TL50HBGYRAOS4IQ | 4 | Blue, Green, Yellow, Red | Integral 8-pin M12 male quick-disconnect connector | |

## Wiring Diagram — 4-Pin Models with 1 to 3 Segments

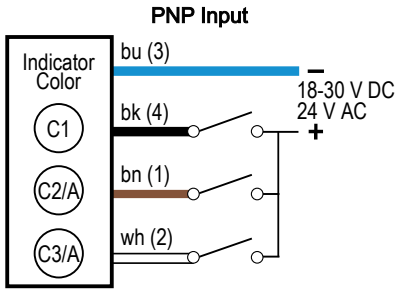


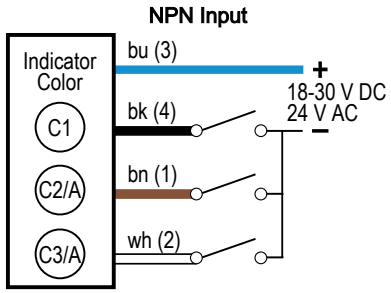


**4-pin M12 Male Pinout**

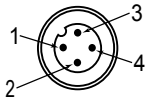


1 = Brown
2 = White
3 = Blue
4 = Black
C1 = Color 1
C2 = Color 2
C3 = Color 3
A = Audible

Pins 1 and 2 can activate the corresponding color or the audible function, if available.

## Wiring Diagram — 5-Pin Models with 4 Segments

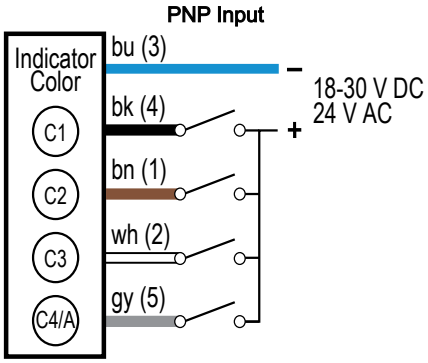


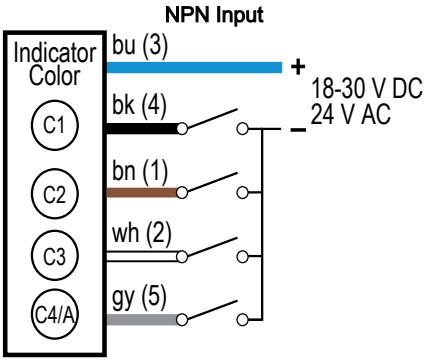


**5-pin M12 Male Pinout**

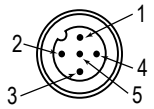


1 = Brown
2 = White
3 = Blue
4 = Black
5 = Gray
C1 = Color 1
C2 = Color 2
C3 = Color 3
C4 = Color 4
A = Audible

## Wiring Diagram — 8-Pin Models with 5 Segments

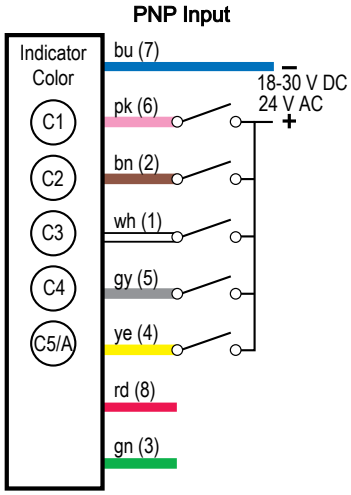


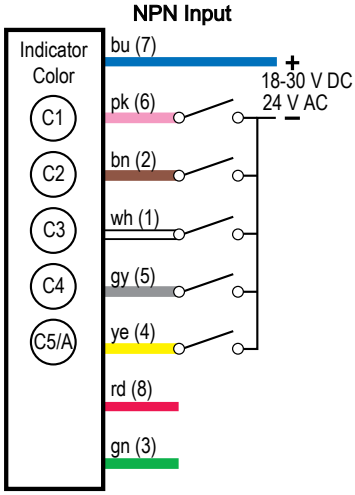


**8-pin M12 Male Pinout**

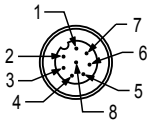


1 = White
2 = Brown
3 = Green
4 = Yellow
5 = Gray
6 = Pink
7 = Blue
8 = Red
C1 = Color 1
C2 = Color 2
C3 = Color 3
C4 = Color 4
C5 = Color 5
A = Audible

Pins 3 and 8 are not used.


© Banner Engineering Corp. All rights reserved.
www.bannerengineering.com

# Specifications

**Supply Voltage and Current**

18 V DC to 30 V DC; or 24 V AC (± 3 V) at 50 Hz to 60 Hz

Indicators—maximum current per LED color:

- 100 mA at 18 V DC
- 60 mA at 30 V DC
- 75 mA at 24 V AC

**Standard Audible Alarm:** 25 mA maximum current

**Sealed Audible Alarm:** 35 mA maximum current

**Omni-Directional Sealed Audible Alarm:** 45 mA maximum current

**Supply Protection Circuitry**

Protected against transient voltages

**Input Response Time**

Indicator On/Off: 10 milliseconds maximum

**Audible Alarm**

**Standard Audible Alarm:** 2.7 kHz ± 500 Hz oscillation frequency; maximum intensity 92 dB at 1 m (3.3 ft) (typical)

**Sealed Audible Alarm:** 2.9 kHz ± 250 Hz oscillation frequency; maximum intensity 94 dB at 1 m (3.3 ft) (typical)

**Omni-Directional Sealed Audible Alarm:** 2.1 kHz ± 250 Hz oscillation frequency; maximum intensity 99 dB at 1 m (3.3 ft) (typical)

**Omni-Directional Sealed Audible Alarm with Intensity Adjustment:** 2.1 kHz ± 250 Hz oscillation frequency; maximum intensity 95 dB at 1 m (3.3 ft) (typical)

**Typical Reduction in Sound Intensity with Audible Adjustment (maximum to minimum)**

- **Standard Audible:** 30 dB
- **Sealed Audible:** 20 dB
- **Omni-Directional Sealed Audible:** 12 dB

**Indicators**

LEDs are independently selected; 1 to 5 colors depending on model

**Indicator Characteristics**

| Color | Dominant Wavelength (nm) or Color Temperature (CCT) | Lumen Output (Typical at 25 °C) |
|---|---|---|
| Green | 525 nm | 60 |
| Red | 625 nm | 32 |
| Yellow | 590 nm | 23 |
| Blue | 475 nm | 23 |
| White | 5000 K | 50 |

**Operating Conditions**

**Non-Audible: –40 °C to +50 °C (–40 °F to +122 °F)**

**Standard and Sealed Audible:** –20 °C to +50 °C (–4 °F to +122 °F)

95% at +50 °C maximum relative humidity (non-condensing)

**Environmental Rating**

UL Type 4X Indoor and UL Type 13

**Non-Audible and Sealed Audible:** IP67

**Standard Audible:** IP50

**Audible Adjustment**

**Standard Audible Alarm:** Unscrew the cover (up to 1.5 turns maximum) to adjust the audible intensity. (Do not exceed 1.5 turns or the cover may detach during operation.) For maximum intensity, rotate the center plug 180° counterclockwise to remove it.

**Sealed Audible Alarm and Omni-Directional Sealed Audible Alarm with Intensity Adjustment:** Rotate the front cover until the desired intensity is reached.

**Omni-Directional Sealed Audible Alarm:** No adjustment.

**Connections**

Integral 4-pin, 5-pin, or 8-pin M12 male quick-disconnect connector, 150 mm (6 in) PVC-jacketed cable with an M12 male quick-disconnect connector, or 2 m (6.5 ft) integral PVC-jacketed cable, depending on model

Models with a quick-disconnect connector require a mating cordset

**Construction**

**Bases and Covers:** ABS

**Light Segment:** Polycarbonate

**Vibration and Mechanical Shock**

Meets IEC 60068-2-6 requirements (Vibration: 10 Hz to 55 Hz, 1.0 mm amplitude, 5 minutes sweep, 30 minutes dwell)

Meets IEC 60068-2-27 requirements (Shock: 30G 11 ms duration, half sine wave)

**Certifications**

Banner Engineering BV
Park Lane, Culliganlaan 2F bus 3
1831 Diegem, BELGIUM

c UL us LISTED

**Required Overcurrent Protection**

**WARNING:** Electrical connections must be made by qualified personnel in accordance with local and national electrical codes and regulations.

Overcurrent protection is required to be provided by end product application per the supplied table.

Overcurrent protection may be provided with external fusing or via Current Limiting, Class 2 Power Supply.

Supply wiring leads < 24 AWG shall not be spliced.

For additional product support, go to www.bannerengineering.com.

| Supply Wiring (AWG) | Required Overcurrent Protection (A) | Supply Wiring (AWG) | Required Overcurrent Protection (A) |
|---|---|---|---|
| 20 | 5.0 | 26 | 1.0 |
| 22 | 3.0 | 28 | 0.8 |
| 24 | 2.0 | 30 | 0.5 |

# Dimensions

All measurements are listed in millimeters [inches], unless noted otherwise. The measurements provided are subject to change.

| Dimensions | # of Colors | Tower Height (H) | | | |
|---|---|---|---|---|---|
| | | Non-Audible | Standard Audible[4] | Sealed Audible | Omni-Directional Sealed Audible |
| 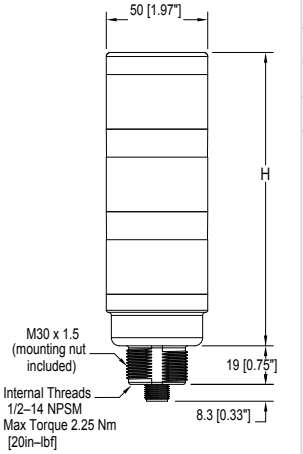 | 1 | 61.2 mm (2.4 in) | 92.0 mm (3.6 in) | 115.1 mm (4.5 in) | 129.1 mm (5.1 in) |
| | 2 | 101.9 mm (4.0 in) | 132.7 mm (5.2 in) | 155.8 mm (6.1 in) | 169.8 mm (6.7 in) |
| | 3 | 142.6 mm (5.6 in) | 173.4 mm (6.8 in) | 196.5 mm (7.7 in) | 210.5 mm (8.3 in) |
| | 4 | 183.3 mm (7.2 in) | 214.1 mm (8.4 in) | 237.2 mm (9.3 in) | 251.2 mm (9.9 in) |
| | 5 | 224.0 mm (8.8 in) | - | - | - |

[4] Tower height (H) with top unscrewed approximately 3.5 mm (0.18 in) to allow sound to escape


© Banner Engineering Corp. All rights reserved.
www.bannerengineering.com

# Accessories

## Cordsets

| 4-Pin Single-Ended M12 Female Cordsets | | | | | |
|---|---|---|---|---|---|
| **Model** | **Length** | **Style** | **Dimensions** | **Pinout (Female)** | |
| **MQDC-403** | 1 m (3.28 ft) | Straight | 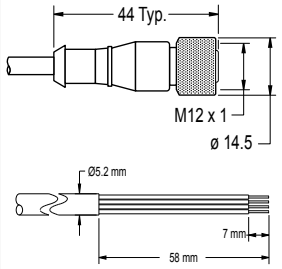 | 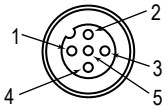 | 1 = Brown<br>2 = White<br>3 = Blue<br>4 = Black<br>5 = Not used |
| **MQDC-406** | 2 m (6.56 ft) | | | | |
| **MQDC-410** | 3 m (9.8 ft) | | | | |
| **MQDC-415** | 5 m (16.4 ft) | | | | |
| **MQDC-430** | 9 m (29.5 ft) | | | | |
| **MQDC-450** | 15 m (49.2 ft) | | | | |
| **MQDC-460** | 18.3 m (60 ft) | | | | |
| **MQDC-470** | 21 m (68.9 ft) | | | | |
| **MQDC-4100** | 30 m (98.43 ft) | | | | |

| 5-Pin Single-Ended M12 Female Cordsets | | | | |
|---|---|---|---|---|
| **Model** | **Length** | **Style** | **Dimensions** | **Pinout (Female)** |
| **MQDC1-501.5** | 0.5 m (1.5 ft) | Straight | 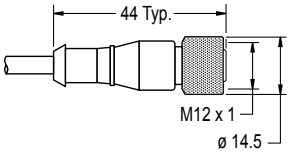 | 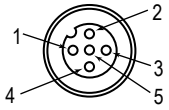 |
| **MQDC1-503** | 0.9 m (2.9 ft) | | | |
| **MQDC1-506** | 2 m (6.5 ft) | | | |
| **MQDC1-515** | 5 m (16.4 ft) | | | |
| **MQDC1-530** | 9 m (29.5 ft) | | | |
| **MQDC1-560** | 18 m (59 ft) | | | |
| **MQDC1-5100** | 31 m (101.7 ft) | | | |
| **MQDC1-506RA** | 2 m (6.5 ft) | Right-Angle | 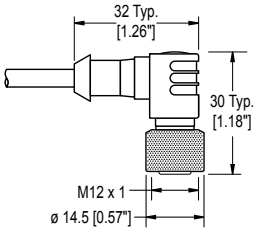 | 1 = Brown<br>2 = White<br>3 = Blue<br>4 = Black<br>5 = Gray |
| **MQDC1-515RA** | 5 m (16.4 ft) | | | |
| **MQDC1-530RA** | 9 m (29.5 ft) | | | |
| **MQDC1-560RA** | 19 m (62.3 ft) | | | |

| 8-Pin Single-Ended M12 Female Open-Shielded Cordsets | | | | |
|---|---|---|---|---|
| **Model** | **Length** | **Style** | **Dimensions** | **Pinout (Female)** |
| **MQDC2S-806** | 2.04 m (6.7 ft) | Straight | 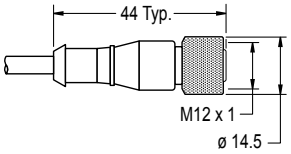 | 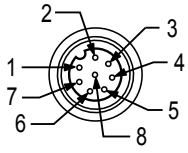 |
| **MQDC2S-815** | 5.04 m (16.54 ft) | | | |
| **MQDC2S-830** | 10.04 m (32.95 ft) | | | |
| **MQDC2S-850** | 16 m (52.49 ft) | | | |
| **MQDC2S-806RA** | 2 m (6.56 ft) | Right-Angle | 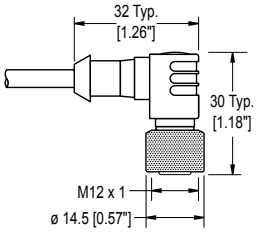 | 1 = White<br>2 = Brown<br>3 = Green<br>4 = Yellow<br>5 = Gray<br>6 = Pink<br>7 = Blue<br>8 = Red |
| **MQDC2S-815RA** | 5 m (16.4 ft) | | | |
| **MQDC2S-830RA** | 10 m (32.81 ft) | | | |
| **MQDC2S-850RA** | 16 m (52.49 ft) | | | |


© Banner Engineering Corp. All rights reserved.
www.bannerengineering.com

# Mounting Brackets

All measurements are listed in millimeters [inches], unless noted otherwise. The measurements provided are subject to change.

**SMB30A**

- Right-angle bracket with curved slot for versatile orientation
- Clearance for M6 (¼ in) hardware
- Mounting hole for 30 mm sensor
- 12-gauge stainless steel

**Hole center spacing:** A to B=40
**Hole size:** A=ø 6.3, B= 27.1 × 6.3, C=ø 30.5

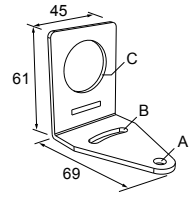


**SMB30FA**

- Swivel bracket with tilt and pan movement for precise adjustment
- Mounting hole for 30 mm sensor
- 12-gauge 304 stainless steel
- Easy sensor mounting to extrude rail T-slot
- Metric- and inch-size bolt available

**Bolt thread:** SMB30FA, A= 3/8 - 16 × 2 in; SMB30FAM10, A= M10 - 1.5 × 50
**Hole size:** B= ø 30.1

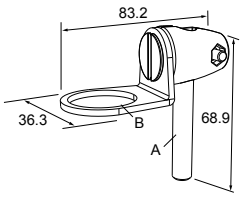


**SMB30MM**

- 12-gauge stainless steel bracket with curved mounting slots for versatile orientation
- Clearance for M6 (¼ in) hardware
- Mounting hole for 30 mm sensor

**Hole center spacing:** A = 51, A to B = 25.4
**Hole size:** A = 42.6 × 7, B = ø 6.4, C = ø 30.1

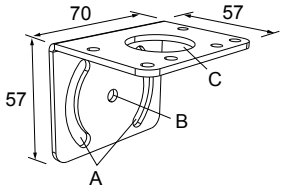


**SMBAMS30P**

- Flat SMBAMS series bracket
- 30 mm hole for mounting sensors
- Articulation slots for 90°+ rotation
- 12-gauge 300 series stainless steel

**Hole center spacing:** A=26.0, A to B=13.0
**Hole size:** A=26.8 × 7.0, B=ø 6.5, C=ø 31.0

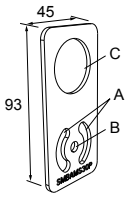


**SMBAMS30RA**

- Right-angle SMBAMS series bracket
- 30 mm hole for mounting sensors
- Articulation slots for 90°+ rotation
- 12-gauge (2.6 mm) cold-rolled steel

**Hole center spacing:** A=26.0, A to B=13.0
**Hole size:** A=26.8 × 7.0, B=ø 6.5, C=ø 31.0

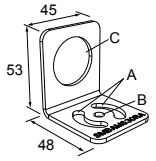


**SMB30SC**

- Swivel bracket with 30 mm mounting hole for sensor
- Black reinforced thermoplastic polyester
- Stainless steel mounting and swivel locking hardware included

**Hole center spacing:** A=ø 50.8
**Hole size:** A=ø 7.0, B=ø 30.0

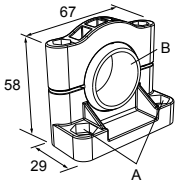


**LMBE12RA35**

- Direct mounting of stand-off pipe, with common bracket type
- Zinc-plated steel
- 1/2-14 NPSM nut
- Mounting distance from the wall to the center of the 1/2-14 NPSM nut is 35 mm

**Hole center spacing:** 20.0

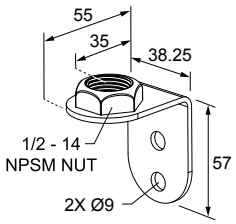



© Banner Engineering Corp. All rights reserved.
www.bannerengineering.com

| | |
|---|---|
| **LMBE12RA45**<br>• Direct mounting of stand-off pipe, with common bracket type<br>• Zinc-plated steel<br>• 1/2-14 NPSM nut<br>• Mounting distance from the wall to the center of the 1/2-14 NPSM nut is 45 mm<br>**Hole center spacing:** 35.0 | 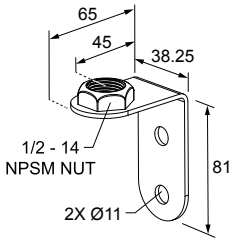 |

## LMB Sealed Right-Angle Bracket

| Model | Description | |
|---|---|---|
| **LMB30RA** - Black polycarbonate<br>**LMB30RAC** - Gray polycarbonate | • **Direct-Mount Models**<br>• Bracket kit with base, 30 mm adapter, set screw, fasteners, O-rings, and gaskets. |  |
| **LMBE12RA** - Black polycarbonate<br>**LMBE12RAC** - Gray polycarbonate | • **Pipe-Mount Models**<br>• Bracket kit with base, ½-14 pipe adapter, set screw, fasteners, O-rings, and gaskets<br>• For use with stand-off pipe (listed and sold separately) |  |

## Elevated Mount System

| Model | | | Description | Components |
|---|---|---|---|---|
| **SA-M30TE12** - Black Acetal | | | • Streamlined black acetal or white UHMW stand-off pipe adapter/cover<br>• Connects between 30 mm light base and ½ in. NPSM/ DN15 pipe<br>• Mounting hardware included |  |
| **SA-M30TE12C** - White UHMW | | | | |
| **Polished 304 Stainless Steel** | **Black Anodized Aluminum** | **Clear Anodized Aluminum** | • Elevated-use stand-off pipe (½ in. NPSM/DN15)<br>• Polished 304 stainless steel, black anodized aluminum, or clear anodized aluminum surface<br>• ½ in. NPT thread at both ends: one end screws into the internal threads of the light's base, and one end screws into the mounting base adapter/cover<br>• Compatible with most industrial environments |  |
| **SOP-E12-150SS**<br>150 mm (6 in) long | **SOP-E12-150A**<br>150 mm (6 in) long | **SOP-E12-150AC**<br>150 mm (6 in) long | | |
| **SOP-E12-300SS**<br>300 mm (12 in) long | **SOP-E12-300A**<br>300 mm (12 in) long | **SOP-E12-300AC**<br>300 mm (12 in) long | | |
| **SOP-E12-900SS**<br>900 mm (36 in) long | **SOP-E12-900A**<br>900 mm (36 in) long | **SOP-E12-900AC**<br>900 mm (36 in) long | | |
| **SA-E12M30** - Black Acetal | | | • Streamlined black acetal or white UHMW mounting base adapter/cover<br>• Connects between ½ in. NPSM/DN15 pipe and 30 mm (1-3/16 in) drilled hole<br>• Mounting hardware included | 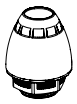 |
| **SA-E12M30C** - White UHMW | | | | |

## Pipe Mounting Flange

| Pipe Mounting Flange | | | |
|---|---|---|---|
| **Model** | **Description** | **Construction** | |
| **SA-F12** | • Elevated-use stand-off pipes (½ in, NPSM/ DN15)<br>• M5 mounting hardware and nitrile gasket included | Die-cast zinc base with black paint | 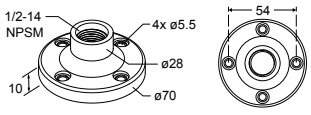 |

Continued on page 7


© Banner Engineering Corp. All rights reserved.
www.bannerengineering.com

Continued from page 6

| Pipe Mounting Flange | | | |
|---|---|---|---|
| **Model** | **Description** | **Construction** | |
| **SA-F12-3** | • Elevated-use stand-off pipes (½ in, NPSM/ DN15)<br>• M4 mounting hardware and nitrile blend gasket included | Black Polycarbonate | 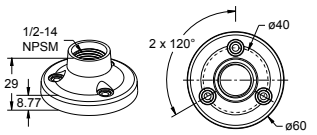 |

# Banner Engineering Corp Limited Warranty

Banner Engineering Corp. warrants its products to be free from defects in material and workmanship for one year following the date of shipment. Banner Engineering Corp. will repair or replace, free of charge, any product of its manufacture which, at the time it is returned to the factory, is found to have been defective during the warranty period. This warranty does not cover damage or liability for misuse, abuse, or the improper application or installation of the Banner product.

**THIS LIMITED WARRANTY IS EXCLUSIVE AND IN LIEU OF ALL OTHER WARRANTIES WHETHER EXPRESS OR IMPLIED (INCLUDING, WITHOUT LIMITATION, ANY WARRANTY OF MERCHANTABILITY OR FITNESS FOR A PARTICULAR PURPOSE), AND WHETHER ARISING UNDER COURSE OF PERFORMANCE, COURSE OF DEALING OR TRADE USAGE.**

This Warranty is exclusive and limited to repair or, at the discretion of Banner Engineering Corp., replacement. **IN NO EVENT SHALL BANNER ENGINEERING CORP. BE LIABLE TO BUYER OR ANY OTHER PERSON OR ENTITY FOR ANY EXTRA COSTS, EXPENSES, LOSSES, LOSS OF PROFITS, OR ANY INCIDENTAL, CONSEQUENTIAL OR SPECIAL DAMAGES RESULTING FROM ANY PRODUCT DEFECT OR FROM THE USE OR INABILITY TO USE THE PRODUCT, WHETHER ARISING IN CONTRACT OR WARRANTY, STATUTE, TORT, STRICT LIABILITY, NEGLIGENCE, OR OTHERWISE.**

Banner Engineering Corp. reserves the right to change, modify or improve the design of the product without assuming any obligations or liabilities relating to any product previously manufactured by Banner Engineering Corp. Any misuse, abuse, or improper application or installation of this product or use of the product for personal protection applications when the product is identified as not intended for such purposes will void the product warranty. Any modifications to this product without prior express approval by Banner Engineering Corp will void the product warranties. All specifications published in this document are subject to change; Banner reserves the right to modify product specifications or update documentation at any time. Specifications and product information in English supersede that which is provided in any other language. For the most recent version of any documentation, refer to: www.bannerengineering.com.

For patent information, see www.bannerengineering.com/patents.


© Banner Engineering Corp. All rights reserved.
www.bannerengineering.com