MINI ARRAY BASIC Two-Piece Measuring Light Curtain

Quick Start Guide

MINI-ARRAY BASIC Two-Piece Measuring Light Curtain configured for material handling and logistics applications with auto-stream serial output, two discrete outputs, and EIA-485 communication

This guide is designed to help you set up and install the MINI-ARRAY Basic Two-Piece Measuring Light Curtain. For complete information on programming, performance, troubleshooting, dimensions, and accessories, please refer to the Instruction Manual at www.bannerengineering.com. Search for p/n 220750 to view the Instruction Manual. Use of this document assumes familiarity with pertinent industry standards and practices.

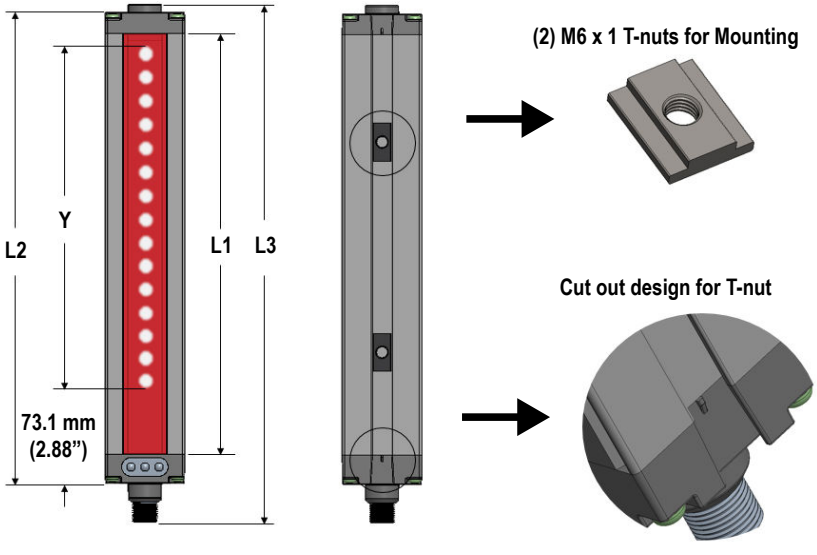

WARNING:

- **Do not use this device for personnel protection**
- Using this device for personnel protection could result in serious injury or death.
- This device does not include the self-checking redundant circuitry necessary to allow its use in personnel safety applications. A device failure or malfunction can cause either an energized (on) or de-energized (off) output condition.

Models

Emitter Model	Receiver Model	Array Length (Y)	Overall Length	Total Beams	Sensor Scan Time (ms)	
					Interlaced Scan	Straight Scan [1]
MBE616Q Emitter	**MBR616PX485SQ**	143 mm (5.62 in)	251 mm (9.9 in)	8	1.4	0.9
MBE1216Q Emitter	**MBR1216PX485SQ**	295 mm (11.62 in)	403 mm (15.9 in)	16	2.5	1.5
MBE1816Q Emitter	**MBR1816PX485SQ**	448 mm (17.62 in)	555 mm (21.9 in)	24	3.6	2.0
MBE2416Q Emitter	**MBR2416PX485SQ**	600 mm (23.62 in)	708 mm (27.9 in)	32	4.8	2.6
MBE3016Q Emitter	**MBR3016PX485SQ**	752 mm (29.62 in)	860 mm (33.9 in)	40	5.9	3.2
MBE3616Q Emitter	**MBR3616PX485SQ**	905 mm (35.62 in)	1013 mm (39.9 in)	48	7.0	3.7
MBE4216Q Emitter	**MBR4216PX485SQ**	1057 mm (41.62 in)	1165 mm (45.9 in)	56	8.1	4.3
MBE4816Q Emitter	**MBR4816PX485SQ**	1210 mm (47.62 in)	1318 mm (51.9 in)	64	9.2	4.8

The receiver's two discrete outputs are set to PNP by default, but can also be configured to NPN.

[1] Worst-case response time is twice the scan time.

Original Document
218593 Rev. B

25 October 2021

218593

ПРОМЭЛЕКТРОНИКА/ sales@prom-elec.com

Emitter and Receiver Wiring

Connect the emitter and receiver cables as shown.

Figure 1. NPN Wiring Diagram

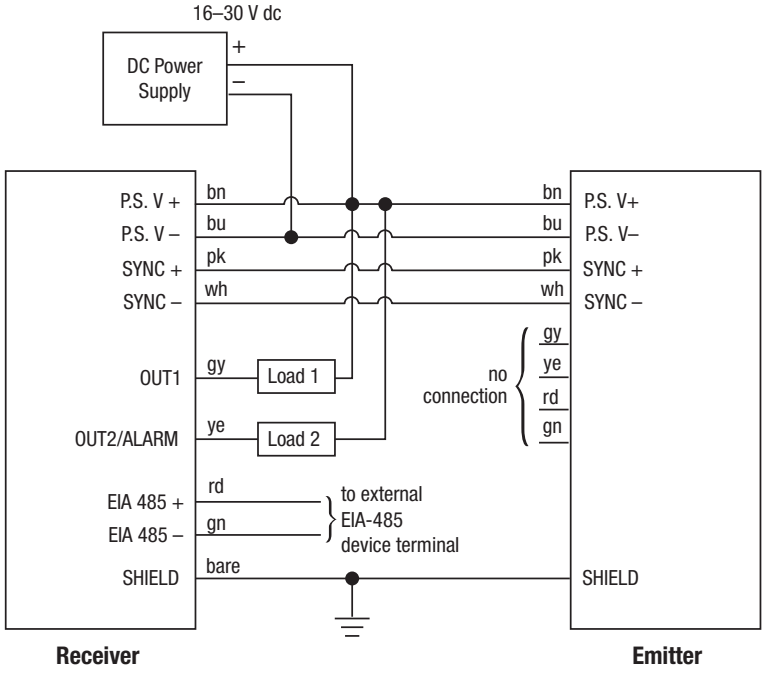

Figure 2. PNP Wiring Diagram

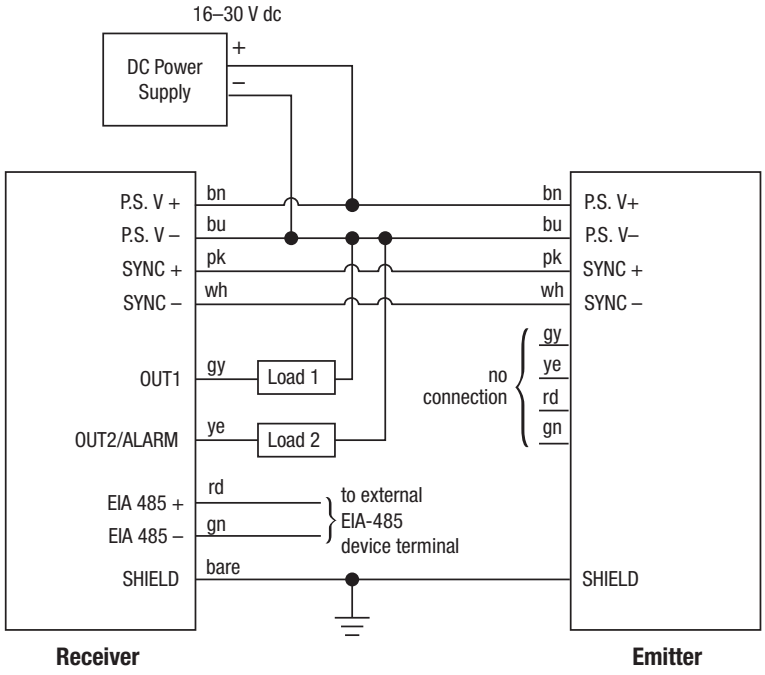

Receiver Output 1: (OUT1) is an open-collector transistor switch rated at 30 V DC maximum, 150 mA maximum. It is protected against overload and short circuits.

Receiver Output 2/Alarm: (OUT2/ALARM) is an open-collector transistor switch rated at 30 V DC maximum, 150 mA maximum. It is protected against overload and short circuits.

Both outputs can be configured as NPN (current sinking) or PNP (current sourcing).

Specifications

Supply Voltage and Power
16 V DC to 30 V DC; maximum power 12 watts

Supply Protection Circuitry
Protected against reverse polarity and transient voltages

Discrete Output Configuration
Two discrete outputs: Output 1 and Output 2
Outputs can be configured as either NPN or PNP (default setting)

Discrete Output (either NPN or PNP) Ratings
Rated at 30 V DC max, 150 mA max load, short circuit protected
OFF-State Leakage Current: < 10 µA at 30 V DC
ON-State Saturation Voltage: < 1 V DC at 10 mA, < 1.5 V DC at 150 mA

Serial Data Outputs
EIA-485 interface
Auto stream default: FBB, TBB
Baud rate 38400 (Adjustable)
8 data bits, 1 start bit, 1 stop bit, no parity

Controller Programming
Via EIA-485 to Banner Sensors GUI software

Emitter/Receiver Range
2 m (6.5 ft)

Minimum Object Sensitivity
Straight Scan Mode: 38.1 mm (1.5 in)
Interlaced Mode: 25.4 mm (1 in)

Sensor Scan Time
Worst-case response time is twice the scan time; see Models on p. 1

Cable Connections
Emitter and receiver with Integral 8-pin M12 male quick disconnect

Status Indicators
See

Environmental Rating
IP54

Construction
Aluminum housing with black anodized finish; acrylic lens cover

Operating Conditions
–40 °C to +70 °C (–40 °F to +158 °F)
95% maximum relative humidity (non-condensing)

Application Notes
The emitter and receiver sync lines (pink and white wires) will be damaged if connected to the power supply
The receiver EIA-485 interface (red and green wires) will be damaged if connected to the power supply

Certifications

Accessories

Cordsets

Additional lengths are available.

8-Pin Threaded M12 Cordsets with Shield—Single Ended

Model	Length	Style	Dimensions	Pinout (Female)	
MAQDC-806	2 m (6.56 ft)	Straight	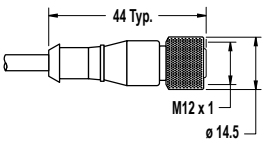	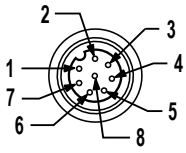	
MAQDC-815	5 m (16.4 ft)				
MAQDC-830	10 m (32.81 ft)				
MAQDC-850	15 m (49.21 ft)			1 = White 2 = Brown 3 = Green 4 = Yellow	5 = Gray 6 = Pink 7 = Blue 8 = Red

Mounting Bracket Kit (Optional)

Standard packaging does not include brackets. Contact Banner Engineering to order brackets.

Figure 3. Bracket Mounting

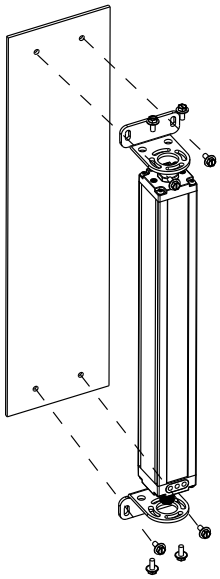

Figure 4. Bracket Dimensions

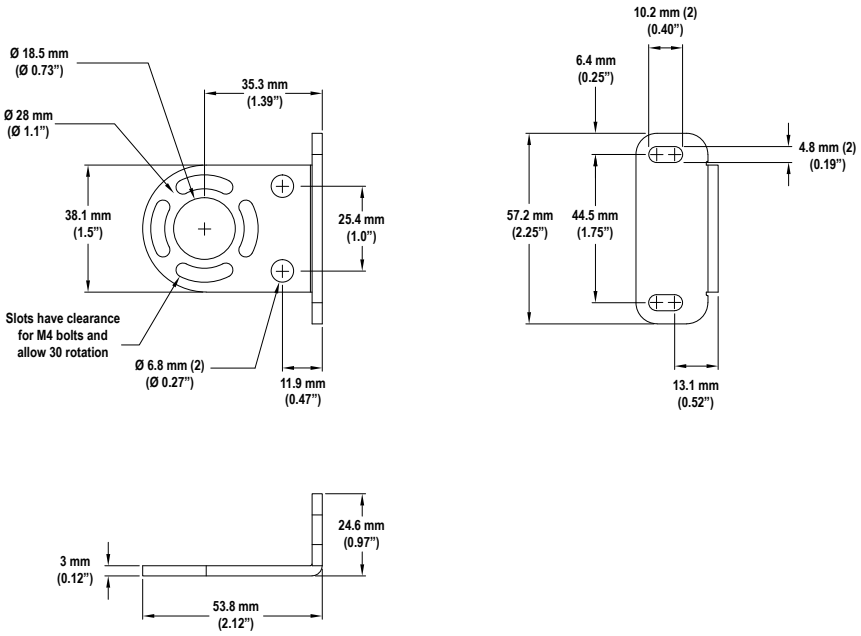

MAB-MBK-EB

- Includes 2 end cap brackets
- Includes 4 screws (M4 x 0.7 x 10 mm) for Mini Array Basic End-cap mounting
- 4 bolts mounting hardware (M4 x 0.7 x 14 mm) for customer
- 4 M4 nuts
- 8 Flat washers
- 8 Split washers

Banner Engineering Corp. Limited Warranty

Banner Engineering Corp. warrants its products to be free from defects in material and workmanship for one year following the date of shipment. Banner Engineering Corp. will repair or replace, free of charge, any product of its manufacture which, at the time it is returned to the factory, is found to have been defective during the warranty period. This warranty does not cover damage or liability for misuse, abuse, or the improper application or installation of the Banner product.

THIS LIMITED WARRANTY IS EXCLUSIVE AND IN LIEU OF ALL OTHER WARRANTIES WHETHER EXPRESS OR IMPLIED (INCLUDING, WITHOUT LIMITATION, ANY WARRANTY OF MERCHANTABILITY OR FITNESS FOR A PARTICULAR PURPOSE), AND WHETHER ARISING UNDER COURSE OF PERFORMANCE, COURSE OF DEALING OR TRADE USAGE.

This Warranty is exclusive and limited to repair or, at the discretion of Banner Engineering Corp., replacement. **IN NO EVENT SHALL BANNER ENGINEERING CORP. BE LIABLE TO BUYER OR ANY OTHER PERSON OR ENTITY FOR ANY EXTRA COSTS, EXPENSES, LOSSES, LOSS OF PROFITS, OR ANY INCIDENTAL, CONSEQUENTIAL OR SPECIAL DAMAGES RESULTING FROM ANY PRODUCT DEFECT OR FROM THE USE OR INABILITY TO USE THE PRODUCT, WHETHER ARISING IN CONTRACT OR WARRANTY, STATUTE, TORT, STRICT LIABILITY, NEGLIGENCE, OR OTHERWISE.**

Banner Engineering Corp. reserves the right to change, modify or improve the design of the product without assuming any obligations or liabilities relating to any product previously manufactured by Banner Engineering Corp. Any misuse, abuse, or improper application or installation of this product or use of the product for personal protection applications when the product is identified as not intended for such purposes will void the product warranty. Any modifications to this product without prior express approval by Banner Engineering Corp will void the product warranties. All specifications published in this document are subject to change; Banner reserves the right to modify product specifications or update documentation at any time. Specifications and product information in English supersede that which is provided in any other language. For the most recent version of any documentation, refer to: www.bannerengineering.com.

For patent information, see www.bannerengineering.com/patents.

© Banner Engineering Corp. All rights reserved