MODEL NO.	"L"	P/N
PIL46U-SL	IEA 4.8" & 13.25"	41524
PIL445U	13716 [540]	56140
PIL460U	20000 [787]	77261
PIL430U	10000 [394]	45096
PIL415U	5000 [196]	45059
PIL46U	2000 [79]	34080

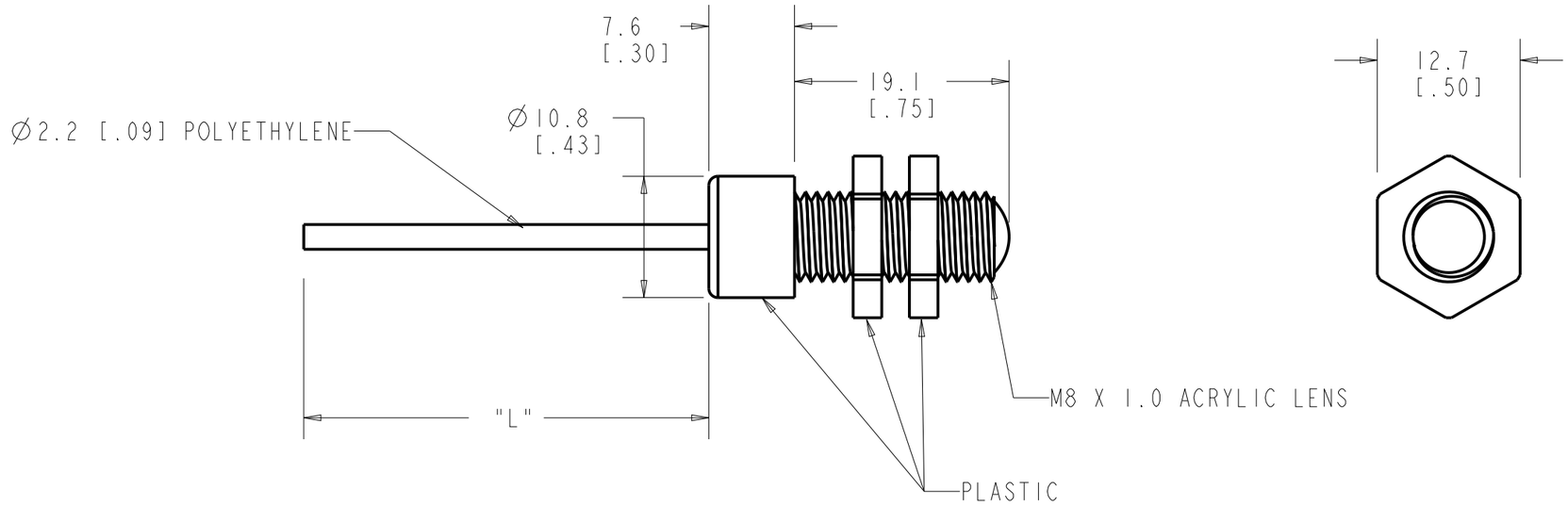

NOTES:
1. ALL DIMENSIONS ARE MILLIMETERS [INCHES] UNLESS OTHERWISE NOTED.
2. REFER TO "www.bannerengineering.com" FOR ADDITIONAL DATA AND SPECIFICATIONS.

This drawing is the property of BANNER ENGINEERING CORP. Any use or reproduction, in any form, without prior written permission of Banner is prohibited.
© Banner Engineering Corp.

THIRD ANGLE PROJECTION

BANNER ENGINEERING CORP.
www.bannerengineering.com

TITLE

PIL4 SERIES UNTERMINATED

SIZE	DRAWING NO.	REV.
B	161893	A
SCALE 2:1	SHEET 1 OF 1	

CREO

ПРОМЭЛЕКТРОНИКА/ sales@prom-elec.com