TL50 Basic Andon Tower Light

Features

Multi-Color and Audible Andon Indicators



- Rugged, cost-effective, and easy-to-install Andon indicators
- Illuminated tower light segments and Andon box indicators provide easy-to-see status
- Model options for 3 or 4 color segments, with or without audible
- Omnidirectional audible option available
- 4 available colors: blue, green, yellow, and red
- Integral 3-to-5 capacitive touch button controller with status LEDs
- Steady or flashing status capability
- 3 pre-assembled stand-off pipe lengths: 300 mm, 600 mm, or 900 mm

Models

Model Key

Family	Activation Method	Number of Touch Inputs	—	Tower Light Model	LED Colors[1]	Audible	Stand-off Length (mm)	Connector
LCA130	**T**	**3**	**—**	**TL50**	**GYR**		**300**	**Q**
	T = Touch	3 = 3 Buttons 4 = 4 Buttons 5 = 5 Buttons			GYR = Green, Yellow, Red BGYR = Blue, Green, Yellow, Red	Blank = None A = Audible AJ = Audible Joined[1]	300 = 300 mm 600 = 600 mm 900 = 900 mm	Q = Integral 4-pin M12 male quick-disconnect connector

Switch Diagrams

The control box status LED mimics the tower light status in color and animation. Tap one of the buttons to turn the corresponding status LED on or off. Hold the button to activate the flashing function.

3-Button Switch Control	4-Button Switch Control	5-Button Switch Control
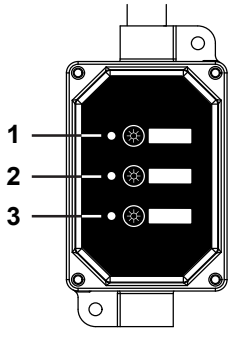	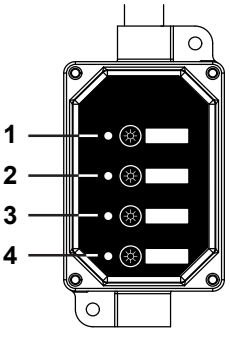	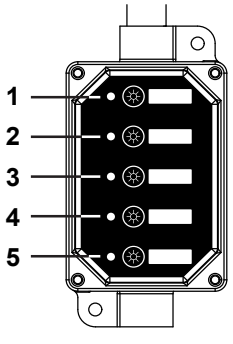
LED Key: 1 = Red or Red & Audible 2 = Yellow 3 = Green	**LED Key:** 1 = Red, Audible, or Red & Audible 2 = Yellow or Red 3 = Green or Yellow 4 = Blue or Green	**LED Key:** 1 = Audible 2 = Red 3 = Yellow 4 = Green 5 = Blue

[1] Audible is activated along with segment 1, the top segment

Original Instructions
21-Sep-26

© Banner Engineering Corp. All rights reserved.
www.bannerengineering.com

232670
p/n: 232670 Rev. D

ПРОМЭЛЕКТРОНИКА/ sales@prom-elec.com

Input Pinout - All Models

5-pin M12 Male Connector	Pin	Wire Color	Wiring Description
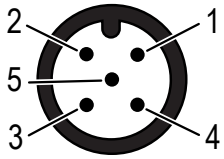	1	Brown (bn)	18 V DC to 30 V DC
	2	White (wh)	Not used
	3	Blue (bu)	DC common (GND)
	4	Black (bk)	Not used
	5	Gray (gy)	Not used

Specifications

Supply Voltage and Current

18 V DC to 30 V DC

Segments—maximum current per LED segment: 45 mA at 18 V DC to 30 V DC

Omni-Directional Audible Alarm: 25 mA maximum current

Supply Protection Circuitry

Protected against transient voltages

Input Response Time

Indicator On/Off: 10 milliseconds maximum

Operating Frequency

2.7 kHz ± 500 Hz oscillation frequency

Audible Intensity: 92 dB at 1 m (typical)

Connections

Integral 5-pin M12 quick-disconnect connector

Models with a quick disconnect require a mating cordset

Construction

Bases and Covers: Polycarbonate

Light Segment: Polycarbonate

Vibration and Mechanical Shock

Meets IEC 60068-2-6 requirements (Vibration: 10 Hz to 55 Hz, 0.5 mm amplitude, 5 minutes sweep, 30 minutes dwell)

Meets IEC 60068-2-27 requirements (Shock: 15G 11 ms duration, half sine wave)

Operating Conditions

Non-Audible: –40 °C to +50 °C (–40 °F to +122 °F)

Audible: –20 °C to +50 °C (–4 °F to +122 °F)

95% at +50 °C maximum relative humidity (non-condensing)

Environmental Rating

Assembly: IP54

Stand-alone tower light: IP65

Indicator Characteristics

Color	Dominant Wavelength (nm) or Color Temperature (CCT)	Lumen Output (Typical at 25 °C)
Green	525 nm	16.5
Red	625 nm	6
Yellow	590 nm	15
Blue	465 nm	4

Required Overcurrent Protection

WARNING: Electrical connections must be made by qualified personnel in accordance with local and national electrical codes and regulations.

Overcurrent protection is required to be provided by end product application per the supplied table.

Overcurrent protection may be provided with external fusing or via Current Limiting, Class 2 Power Supply.

Supply wiring leads < 24 AWG shall not be spliced.

For additional product support, go to www.bannerengineering.com.

Supply Wiring (AWG)	Required Overcurrent Protection (A)	Supply Wiring (AWG)	Required Overcurrent Protection (A)
20	5.0	26	1.0
22	3.0	28	0.8
24	2.0	30	0.5

Certifications

Banner Engineering BV
Park Lane, Culliganlaan 2F bus 3
1831 Diegem, BELGIUM

Turck Banner LTD Blenheim House
Blenheim Court
Wickford, Essex SS11 8YT
GREAT BRITAIN

© Banner Engineering Corp. All rights reserved.
www.bannerengineering.com

Dimensions

All measurements are listed in millimeters [inches], unless noted otherwise. The measurements provided are subject to change.

Standard Models

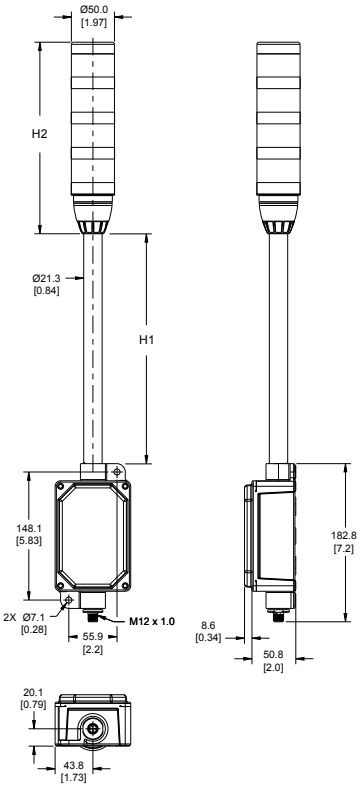

Audible Models

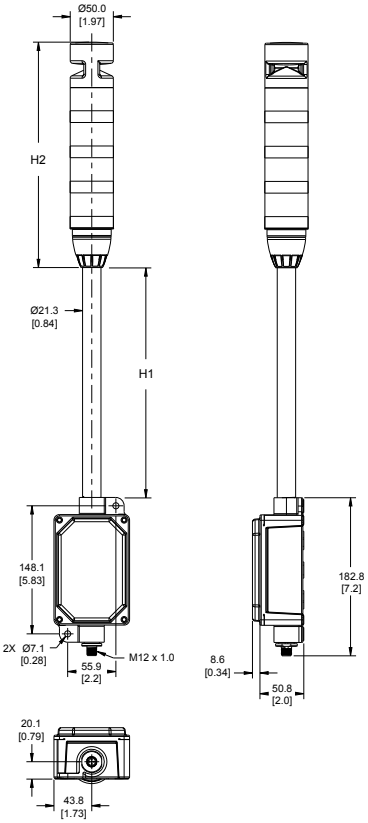

Stand-Off Pole Height (H1)

Model	Stand-Off
LCA..TL50..300	300 mm (11.81 in)
LCA..TL50..600	600 mm (23.62 in)
LCA..TL50..900	900 mm (35.43 in)

Tower Light Height (H2)

# of Segments	Standard	Audible
3	180.9 mm (7.12 in)	220.0 mm (8.66 in)
4	221.6 mm (8.72 in)	260.7 mm (10.26 in)

Accessories

Power Supplies

PSW-24-1

- 24 V DC, 1 A Class 2 UL Listed power supply
- 100 V AC to 240 V AC 50/60 Hz input
- 2 m (6.5 ft) PVC cable with M12 quick disconnect
- Includes Type A (US, Canada, Japan, Puerto Rico, Taiwan), Type C (Germany, France, South Korea, Netherlands, Poland, Spain, Turkey), Type G (United Kingdom, Ireland, Singapore, Vietnam), and Type I (China, Australia, New Zealand) AC detachable input plugs



© Banner Engineering Corp. All rights reserved.
www.bannerengineering.com

PSW-24-2

- 24 V DC, 2 A Class 2 UL Listed power supply
- 100 V AC to 240 V AC 50/60 Hz input
- 3.5 m (11.5 ft) PVC cable with M12 quick disconnect
- Includes Type A (US, Canada, Japan, Puerto Rico, Taiwan), Type C (Germany, France, South Korea, Netherlands, Poland, Spain, Turkey), Type G (United Kingdom, Ireland, Singapore, Vietnam), and Type I (China, Australia, New Zealand) AC detachable input plugs

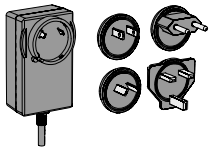

Cordsets

4-Pin A-Code Single-Ended M12 Female Cordsets (datasheet p/n 235937)

Model	Length	Dimensions (mm)	Pinout (Female)	
BC-M12F4-22-1	1 m (3.28 ft)	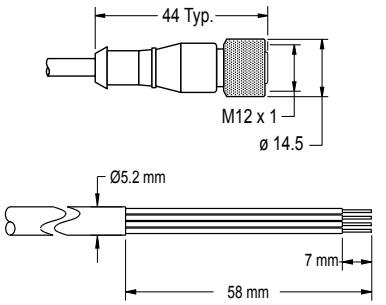	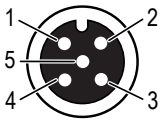	1 = Brown 2 = White 3 = Blue 4 = Black 5 = Unused c UL us LISTED
BC-M12F4-22-2	2 m (6.56 ft)			
BC-M12F4-22-5	5 m (16.4 ft)			
BC-M12F4-22-8	8 m (26.25 ft)			
BC-M12F4-22-10	10 m (30.81 ft)			
BC-M12F4-22-15	15 m (49.2 ft)			
BC-M12F4-22-20	20 m (65.61 ft)			
BC-M12F4-22-25	25 m (82.02 ft)			
BC-M12F4-22-30	30 m (98.42 ft)			

4-Pin A-Code Single-Ended M12 Female Right-Angle Cordsets (datasheet p/n 235937)

Model	Length	Dimensions (mm)	Pinout (Female)	
BC-M12F4A-22-1	1 m (3.28 ft)	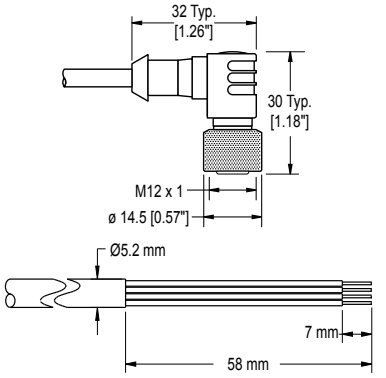	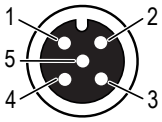	1 = Brown 2 = White 3 = Blue 4 = Black 5 = Unused c UL us LISTED
BC-M12F4A-22-2	2 m (6.56 ft)			
BC-M12F4A-22-5	5 m (16.4 ft)			
BC-M12F4A-22-8	8 m (26.25 ft)			
BC-M12F4A-22-10	10 m (30.81 ft)			
BC-M12F4A-22-15	15 m (49.2 ft)			

4-Pin A-Code Double-Ended M12 Female to M12 Male Cordsets (datasheet p/n 236186)

Model	Length	Dimensions (mm)	Pinouts	
BC-M12F4-M12M4-22-1	1 m (3.28 ft)	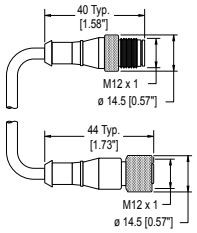	Female 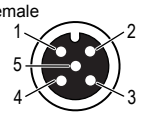 Male 	1 = Brown 2 = White 3 = Blue 4 = Black 5 = Unused c UL us LISTED
BC-M12F4-M12M4-22-2	2 m (6.56 ft)			
BC-M12F4-M12M4-22-3	3 m (9.84 ft)			
BC-M12F4-M12M4-22-4	4 m (13.12 ft)			
BC-M12F4-M12M4-22-5	5 m (16.4 ft)			
BC-M12F4-M12M4-22-10	10 m (30.81 ft)			
BC-M12F4-M12M4-22-15	15 m (49.2 ft)			

© Banner Engineering Corp. All rights reserved.
www.bannerengineering.com

4-Pin A-Code Double-Ended M12 Female to M12 Male Right-Angle Cordsets (datasheet p/n 236186)				
Model	**Length**	**Dimensions (mm)**	**Pinouts**	
BC-M12F4-M12M4A-22-1	1 m (3.28 ft)	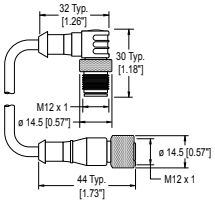	Female 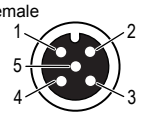 Male 	1 = Brown 2 = White 3 = Blue 4 = Black 5 = Unused c UL us LISTED
BC-M12F4-M12M4A-22-2	2 m (6.56 ft)			
BC-M12F4-M12M4A-22-5	5 m (16.4 ft)			
BC-M12F4-M12M4A-22-8	8 m (26.25 ft)			
BC-M12F4-M12M4A-22-10	10 m (30.81 ft)			
BC-M12F4-M12M4A-22-15	15 m (49.2 ft)			

Banner Engineering Corp Limited Warranty

Banner Engineering Corp. warrants its products to be free from defects in material and workmanship for one year following the date of shipment. Banner Engineering Corp. will repair or replace, free of charge, any product of its manufacture which, at the time it is returned to the factory, is found to have been defective during the warranty period. This warranty does not cover damage or liability for misuse, abuse, or the improper application or installation of the Banner product.

THIS LIMITED WARRANTY IS EXCLUSIVE AND IN LIEU OF ALL OTHER WARRANTIES WHETHER EXPRESS OR IMPLIED (INCLUDING, WITHOUT LIMITATION, ANY WARRANTY OF MERCHANTABILITY OR FITNESS FOR A PARTICULAR PURPOSE), AND WHETHER ARISING UNDER COURSE OF PERFORMANCE, COURSE OF DEALING OR TRADE USAGE.

This Warranty is exclusive and limited to repair or, at the discretion of Banner Engineering Corp., replacement. **IN NO EVENT SHALL BANNER ENGINEERING CORP. BE LIABLE TO BUYER OR ANY OTHER PERSON OR ENTITY FOR ANY EXTRA COSTS, EXPENSES, LOSSES, LOSS OF PROFITS, OR ANY INCIDENTAL, CONSEQUENTIAL OR SPECIAL DAMAGES RESULTING FROM ANY PRODUCT DEFECT OR FROM THE USE OR INABILITY TO USE THE PRODUCT, WHETHER ARISING IN CONTRACT OR WARRANTY, STATUTE, TORT, STRICT LIABILITY, NEGLIGENCE, OR OTHERWISE.**

Banner Engineering Corp. reserves the right to change, modify or improve the design of the product without assuming any obligations or liabilities relating to any product previously manufactured by Banner Engineering Corp. Any misuse, abuse, or improper application or installation of this product or use of the product for personal protection applications when the product is identified as not intended for such purposes will void the product warranty. Any modifications to this product without prior express approval by Banner Engineering Corp will void the product warranties. All specifications published in this document are subject to change; Banner reserves the right to modify product specifications or update documentation at any time. Specifications and product information in English supersede that which is provided in any other language. For the most recent version of any documentation, refer to: www.bannerengineering.com.

For patent information, see www.bannerengineering.com/patents.

© Banner Engineering Corp. All rights reserved.
www.bannerengineering.com