EZ-LIGHT® 2- or 3-Color General-Purpose Indicators Datasheet

Technical Information

To view or download the latest technical information about this product, including specifications, dimensions, accessories, and wiring, go to www.bannerengineering.com.

WARNING:

- **Do not use this device for personnel protection**
- Using this device for personnel protection could result in serious injury or death.
- This device does not include the self-checking redundant circuitry necessary to allow its use in personnel safety applications. A device failure or malfunction can cause either an energized (on) or de-energized (off) output condition.

Models

Models			LED Colors — 2 or 3 Lights, Independently Selected			Construction
	PNP Input	NPN Input	Color 1	Color 2	Color 3	
	M18GRXPQ	M18GRXNQ	Green	Red	—	Nickel-plated brass housing, thermoplastic diffuser Fully encapsulated IP67
	M18GXYPQ	M18GXYNQ	Green	—	Yellow	
	M18XRYPQ	M18XRYNQ	—	Red	Yellow	
	M18GRYPQ	M18GRYNQ	Green	Red	Yellow	
	K30LGRXPQ	K30LGRXNQ	Green	Red	—	22 mm threaded polycarbonate base, translucent polycarbonate dome Fully encapsulated IP67, IP69K per DIN 40050-9
	K30LGXYPQ	K30LGXYNQ	Green	—	Yellow	
	K30LXRYPQ	K30LXRYNQ	—	Red	Yellow	
	K30LGRYPQ	K30LGRYNQ	Green	Red	Yellow	
	K50LGRXPQ	K50LGRXNQ	Green	Red	—	30 mm polycarbonate base, translucent polycarbonate dome Fully encapsulated IP67, IP69K per DIN 40050-9
	K50LGXYPQ	K50LGXYNQ	Green	—	Yellow	
	K50LXRYPQ	K50LXRYNQ	—	Red	Yellow	
	K50LGRYPQ	K50LGRYNQ	Green	Red	Yellow	
	K50FLGRXPQ	K50FLGRXNQ	Green	Red	—	ABS base, translucent polycarbonate dome Fully encapsulated IP67, IP69K per DIN 40050-9
	K50FLGXYPQ	K50FLGXYNQ	Green	—	Yellow	
	K50FLXRYPQ	K50FLXRYNQ	—	Red	Yellow	
	K50FLGRYPQ	K50FLGRYNQ	Green	Red	Yellow	
	K80LGRXPQ	K80LGRXNQ	Green	Red	—	Polycarbonate base, translucent polycarbonate dome Electronics fully encapsulated IP67
	K80LGXYPQ	K80LGXYNQ	Green	—	Yellow	
	K80LXRYPQ	K80LXRYNQ	—	Red	Yellow	
	K80LGRYPQ	K80LGRYNQ	Green	Red	Yellow	

The following models are no longer available for order, but are still covered by the information in this document.

© Banner Engineering Corp.

ПРОМЭЛЕКТРОНИКА/ sales@prom-elec.com

Models			LED Colors — 2 or 3 Lights, Independently Selected			Construction
	PNP Input	NPN Input	Color 1	Color 2	Color 3	
	T18GRXPQ	T18GRXNQ	Green	Red	—	Thermoplastic polyester housing, thermoplastic diffuser Fully encapsulated IP67
	T18GXYPQ	T18GXYNQ	Green	—	Yellow	
	T18XRYPQ	T18XRYNQ	—	Red	Yellow	
	T18GRYPQ	T18GRYNQ	Green	Red	Yellow	
	T30GRXPQ	T30GRXNQ	Green	Red	—	Thermoplastic polyester housing, thermoplastic diffuser Fully encapsulated IP67
	T30GXYPQ	T30GXYNQ	Green	—	Yellow	
	T30XRYPQ	T30XRYNQ	—	Red	Yellow	
	T30GRYPQ	T30GRYNQ	Green	Red	Yellow	
	T30GRBPQ	—	Green	Red	Blue	
	T30GROPQ	—	Green	Red	Orange	
	—	T30RGR5PNQ	Red	Green	Red	
	T30RGXPQ	—	Red	Green	—	
	T8LGRXPQP	T8LGRXNQP	Green	Red	—	Polycarbonate/ABS alloy housing, thermoplastic diffuser IP67
	T8LGXYPQP	T8LGXYNQP	Green	—	Yellow	
	T8LXRYPQP	T8LXRYNQP	—	Red	Yellow	

Models with a quick disconnect require a mating cordset.

T8L Models: Standard 150 mm (6 in) PVC-jacketed cable with 4-pin M12 quick-disconnect connector models are listed. For integral 4-wire cabled model, omit suffix **QP** (for example, **T8LGRXP**).

K30L Models: Standard integral 4-pin M12 quick-disconnect connector models are listed. For 2 m (6.5 ft) integral 4-wire cabled model, omit suffix **Q** (for example, **K30LGRXP**). For 150 mm (6 in) PVC-jacketed cable with 4-pin M12 quick-disconnect connector, replace suffix **Q** with **QP** (for example, **K30LGRXPQP**). For terminal models, replace suffix **Q** with **T** (for example, **K30LGRXPT**).

K80L Models: Standard integral 4-pin M12 quick-disconnect connector models are listed. For terminal-wired model, omit suffix **Q** (for example, **K80LGRXP**).

T30 Models: Standard integral 4-pin M12 quick-disconnect connector models are listed. For 9 m (30 ft) PVC cable model, replace suffix **Q** with **W/30** (for example, T30GRYP W/30). For 150 mm (6 in) PUR-jacketed cable with 4-pin quick-disconnect connector, replace suffix **Q** with **QPMA** (for example, **T30GRYPQPMA**).

Other Models: Standard integral 4-pin M12 quick-disconnect connector models are listed. For 2 m (6.5 ft) integral 4-wire cabled model, omit suffix **Q** (for example, **M18GRXP**). For 150 mm (6 in) PVC-jacketed cable with 4-pin M12 quick-disconnect connector, replace suffix **Q** with **QP** (for example, **M18GRXPQP**).

Contact Banner Engineering for other colors and color combinations.

Wiring Diagrams

Multi Color Wiring			
NPN 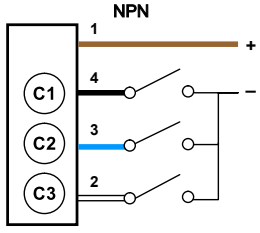	PNP 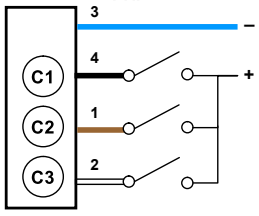	1 = Brown 2 = White 3 = Blue 4 = Black 5 = Gray	C1 = Color 1 C2 = Color 2 C3 = Color 3
		Gray Wire not used in K30 Terminal models	

© Banner Engineering Corp. All rights reserved.

Single Color Wiring

NPN

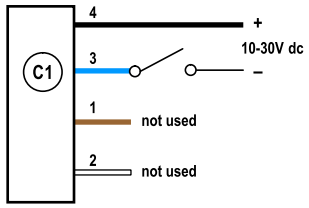

PNP

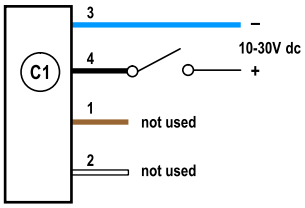

Specifications

Supply Voltage and Current

T8L models: 10 V DC to 30 V DC at 20 mA maximum

T18, M18, and K30L models: 10 V DC to 30 V DC at 25 mA maximum per LED color

T30 models: 10 V DC to 30 V DC at 40 mA maximum per LED color

K50L, K50FL, and K80L models: 18 V DC to 30 V DC at 40 mA maximum per LED color

Indicators

Entire translucent diffuser or dome provides indication. Green and yellow, when connected to discrete output of 3-wire or 4-wire sensors. For other colors, contact factory for availability.

Input Response Time

Indicator ON/OFF: 1 ms max.

Operating Conditions

Temperature: –40 °C to +50 °C (–40 °F to +122 °F)

Environmental Rating

Rated IP67. T8L not encapsulated; K80L has encapsulated electronics only; other models fully encapsulated.

K30L, K50L, and K50FL QD models meet IP69K per DIN 40050-9.

Cabled models also meet IP69K if the cable and cable entrance are protected from high-pressure spray.

Connections

T8L models: 150 mm (6 in) PVC-jacketed cable with a 4-pin M12 male quick-disconnect connector (QP) or 2 m (6.5 ft) unterminated 4-wire integral cable, depending on model

K30L models: Integral 4-pin M12 male quick-disconnect connector (Q), 150 mm (6 in) PVC-jacketed cable with a 4-pin M12 male quick-disconnect connector (QP), 2 m (6.5 ft) unterminated 4-wire integral cable, or 5 color-coded screw terminal for up to 16 AWG wire, depending on model. Screw terminal max torque: 0.11 N·m (1.0 lbf·in).

K80L models: Integral 4-pin M12 male quick-disconnect connector (Q) standard; terminal-wired models available for use with bulk cable; compression fitting optional. Contact Factory for cable information.

Other models: Integral 4-pin M12 male quick-disconnect connector (Q), 150 mm (6 in) PVC-jacketed cable with a 4-pin M12 male quick-disconnect connector (QP), or 2 m (6.5 ft) unterminated 4-wire integral cable, depending on model

Construction

See Models lists

Required Overcurrent Protection

WARNING: Electrical connections must be made by qualified personnel in accordance with local and national electrical codes and regulations.

Overcurrent protection is required to be provided by end product application per the supplied table.

Overcurrent protection may be provided with external fusing or via Current Limiting, Class 2 Power Supply.

Supply wiring leads < 24 AWG shall not be spliced.

For additional product support, go to www.bannerengineering.com.

Supply Wiring (AWG)	Required Overcurrent Protection (A)	Supply Wiring (AWG)	Required Overcurrent Protection (A)
20	5.0	26	1.0
22	3.0	28	0.8
24	1.0	30	0.5

Certifications

All models:

Banner Engineering BV
Park Lane, Culliganlaan 2F bus 3
1831 Diegem, BELGIUM

K50L, K50FL, T18, and T30 models only:

Turck Banner LTD Blenheim House
Blenheim Court
Wickford, Essex SS11 8YT
GREAT BRITAIN

K30L and K50L models only:

c UL us LISTED

Dimensions

All measurements are listed in millimeters [inches], unless noted otherwise.

© Banner Engineering Corp. All rights reserved.

T8L Models

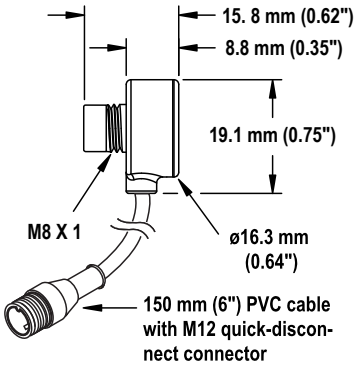

T18 Models

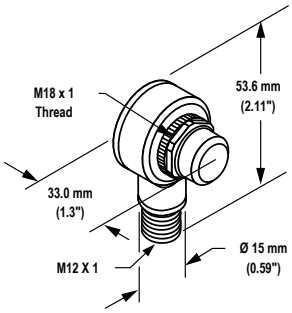

M18 Models

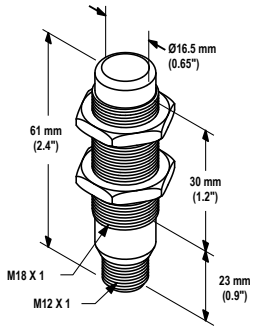

T30 Models

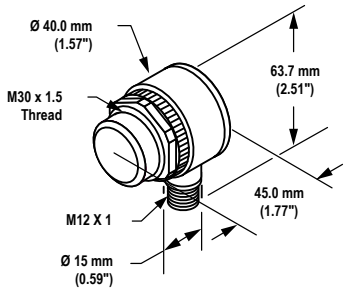

K30L Models

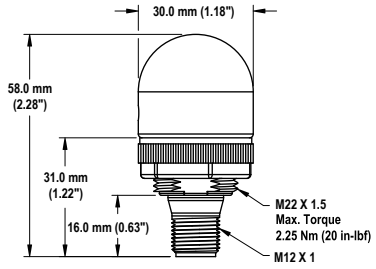

K30 Terminal Models

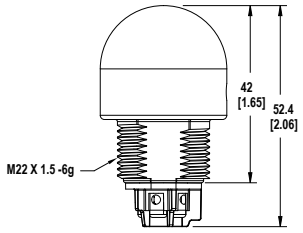

K50L Models

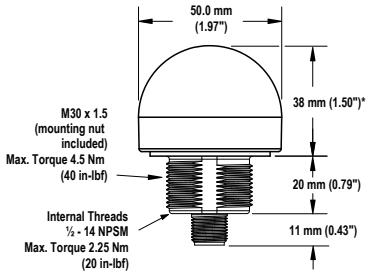

K50FL Models

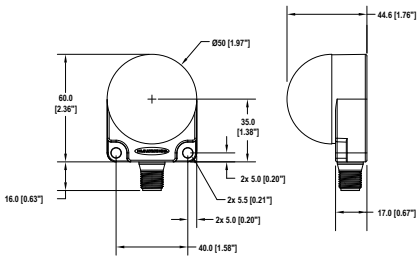

K80L Models

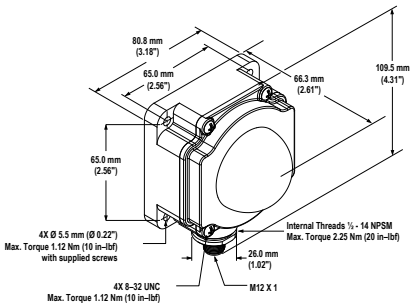

© Banner Engineering Corp. All rights reserved.

Accessories

Cordsets

4-Pin Threaded M12 Cordsets—Single Ended					
Model	**Length**	**Style**	**Dimensions**	**Pinout (Female)**	
MQDC-406	2 m (6.56 ft)	Straight	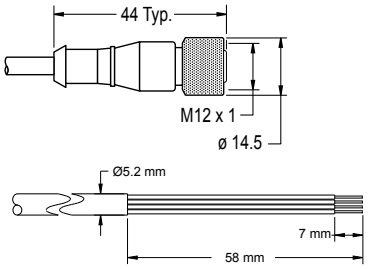	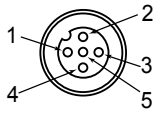	1 = Brown 2 = White 3 = Blue 4 = Black 5 = Unused
MQDC-415	5 m (16.4 ft)				
MQDC-430	9 m (29.5 ft)				
MQDC-450	15 m (49.2 ft)				
MQDC-406RA	2 m (6.56 ft)	Right-Angle	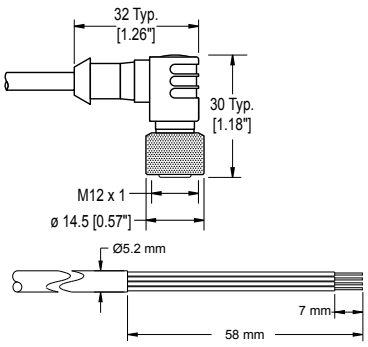	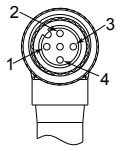	
MQDC-415RA	5 m (16.4 ft)				
MQDC-430RA	9 m (29.5 ft)				
MQDC-450RA	15 m (49.2 ft)				

Banner Engineering Corp Limited Warranty

Banner Engineering Corp. warrants its products to be free from defects in material and workmanship for one year following the date of shipment. Banner Engineering Corp. will repair or replace, free of charge, any product of its manufacture which, at the time it is returned to the factory, is found to have been defective during the warranty period. This warranty does not cover damage or liability for misuse, abuse, or the improper application or installation of the Banner product.

THIS LIMITED WARRANTY IS EXCLUSIVE AND IN LIEU OF ALL OTHER WARRANTIES WHETHER EXPRESS OR IMPLIED (INCLUDING, WITHOUT LIMITATION, ANY WARRANTY OF MERCHANTABILITY OR FITNESS FOR A PARTICULAR PURPOSE), AND WHETHER ARISING UNDER COURSE OF PERFORMANCE, COURSE OF DEALING OR TRADE USAGE.

This Warranty is exclusive and limited to repair or, at the discretion of Banner Engineering Corp., replacement. **IN NO EVENT SHALL BANNER ENGINEERING CORP. BE LIABLE TO BUYER OR ANY OTHER PERSON OR ENTITY FOR ANY EXTRA COSTS, EXPENSES, LOSSES, LOSS OF PROFITS, OR ANY INCIDENTAL, CONSEQUENTIAL OR SPECIAL DAMAGES RESULTING FROM ANY PRODUCT DEFECT OR FROM THE USE OR INABILITY TO USE THE PRODUCT, WHETHER ARISING IN CONTRACT OR WARRANTY, STATUTE, TORT, STRICT LIABILITY, NEGLIGENCE, OR OTHERWISE.**

Banner Engineering Corp. reserves the right to change, modify or improve the design of the product without assuming any obligations or liabilities relating to any product previously manufactured by Banner Engineering Corp. Any misuse, abuse, or improper application or installation of this product or use of the product for personal protection applications when the product is identified as not intended for such purposes will void the product warranty. Any modifications to this product without prior express approval by Banner Engineering Corp will void the product warranties. All specifications published in this document are subject to change; Banner reserves the right to modify product specifications or update documentation at any time. Specifications and product information in English supersede that which is provided in any other language. For the most recent version of any documentation, refer to: www.bannerengineering.com.

For patent information, see www.bannerengineering.com/patents.

Document title: EZ-LIGHT™ 2- or 3-Color General-Purpose Indicators
Part number: 121899
Revision: M
Original Instructions
© Banner Engineering Corp. All rights reserved.

121899

© Banner Engineering Corp. All rights reserved.