MODEL NO.	"L"	"PL"	P/N
PBPS26UM3.1	2000 [79]	79 [3.1]	800629
PBPS215U	5000 [197]	51 [2.0]	65941
PBPS26U	2000 [79]	51 [2.0]	35042

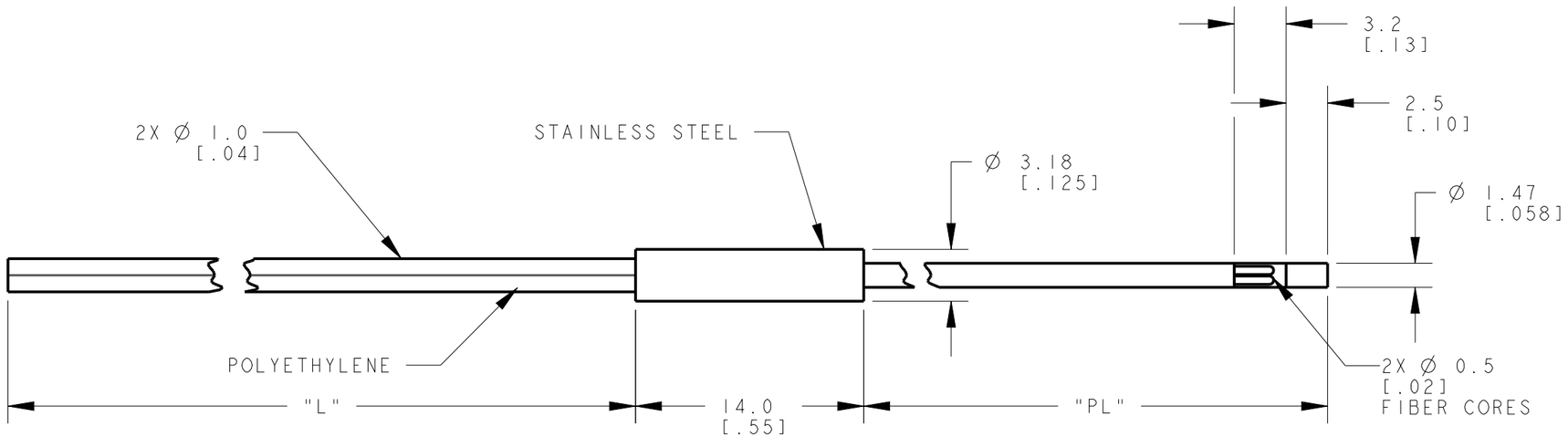



NOTES:
1. ALL DIMENSIONS ARE MILLIMETERS [INCHES] UNLESS OTHERWISE NOTED.
2. REFER TO "www.bannerengineering.com" FOR ADDITIONAL DATA AND SPECIFICATIONS.

This drawing is the property of BANNER ENGINEERING CORP. Any use or reproduction, in any form, without prior written permission of Banner is prohibited.
© 2015 Banner Engineering Corp.

THIRD ANGLE PROJECTION

BANNER ENGINEERING CORP.
www.bannerengineering.com

TITLE

PBPS2 SERIES UNTERMINATED

SIZE	DRAWING NO.	REV.
B	176182	A
SCALE 3:1	SHEET 1 OF 1	

CREO

ПРОМЭЛЕКТРОНИКА/ sales@prom-elec.com