Note: Thread bosses use #10 x 3/8 Trilobular thread forming screw

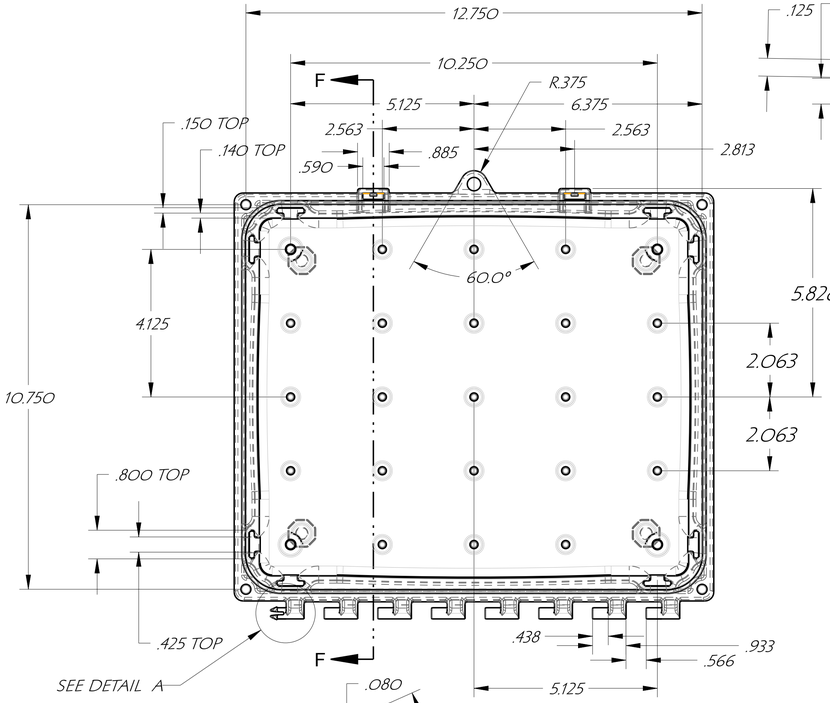

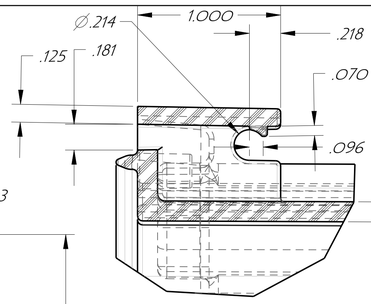

DETAIL C
SCALE 2.000

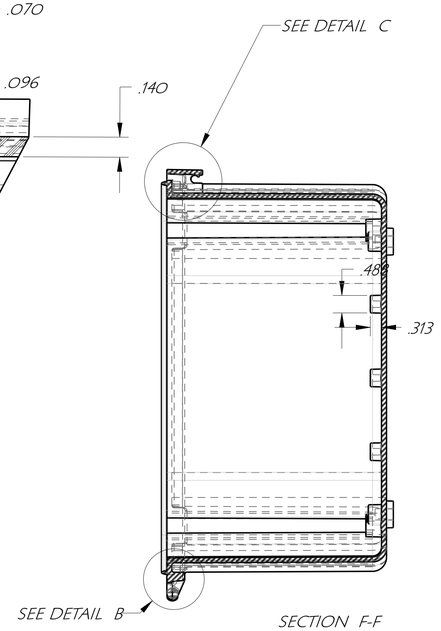

SECTION F-F

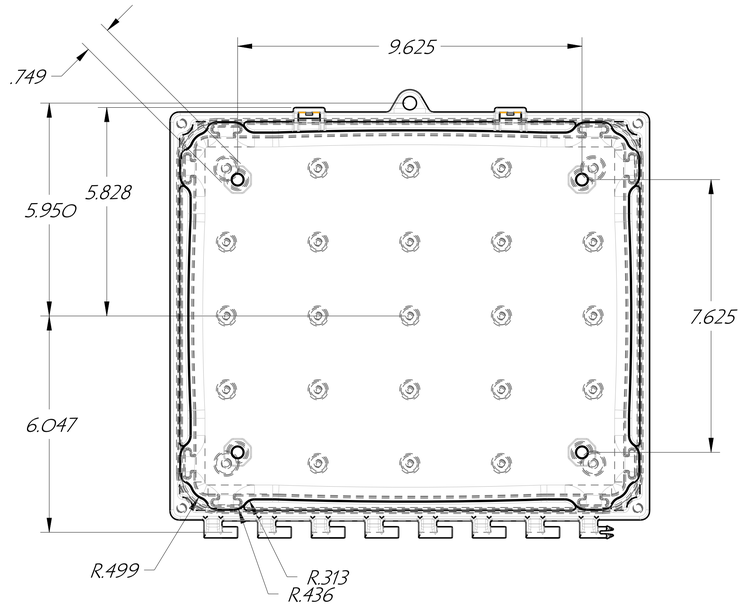

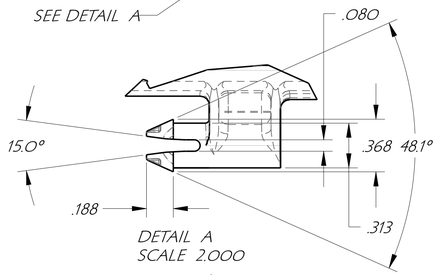

DETAIL A
SCALE 2.000

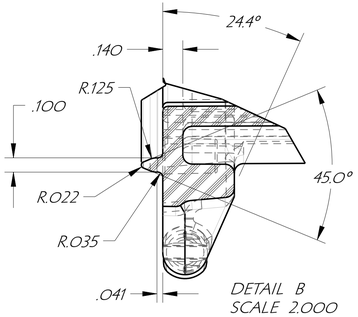

DETAIL B
SCALE 2.000

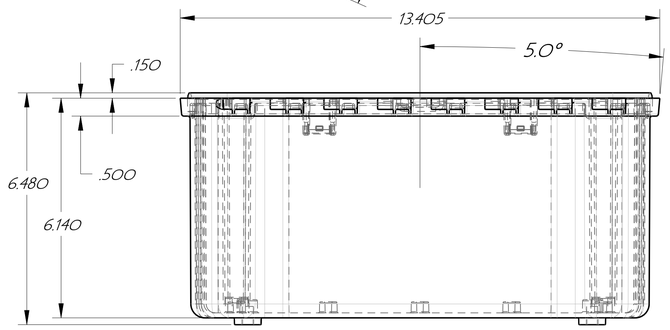

12 X 10 ENCLOSURE

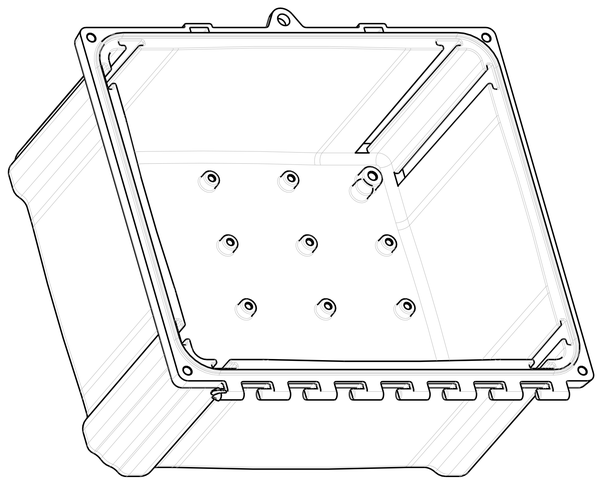

DES. C.R.W.	DRN. C.R.W.	CHKD.		ATTABOX	CUSTOMER
APP.	DATE 10/16/07	SCALE			
TOLERANCES:	2 PLACE DEC. ±.010	FRAC. ±1/64	PART NAME ENCLOSURE & LID	PART NO.	PART MAT'L POLYCARBONATE
UNLESS OTHERWISE SHOWN	3 PLACE DEC. ±.005		TOOL DESC. SINGLE CAVITY INJECTION MOLD	SHRINK .006/IN.	SHEET OF
	4 PLACE DEC. ±.0005				

ПРОМЭЛЕКТРОНИКА/ sales@prom-elec.com

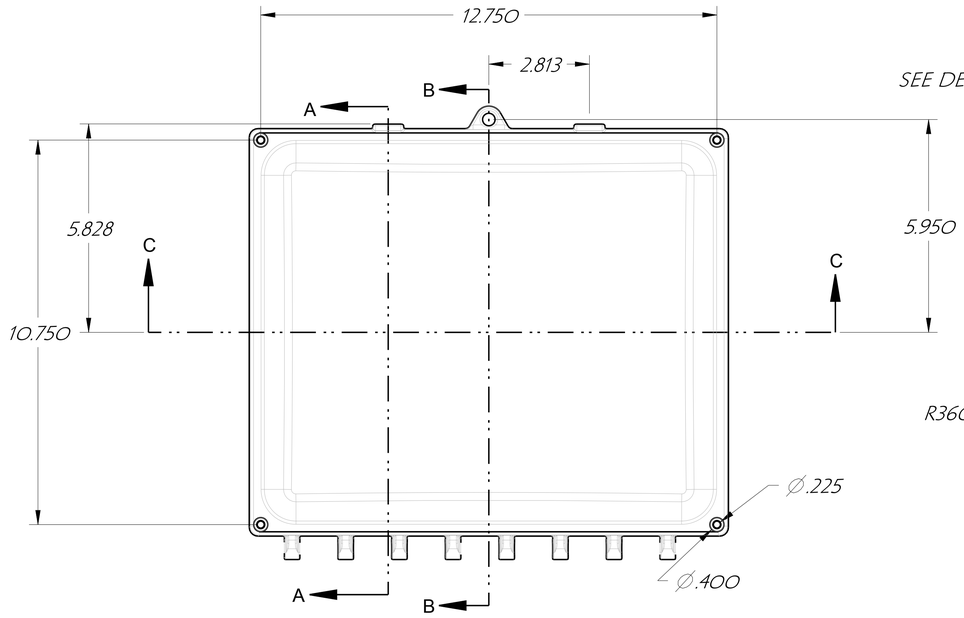

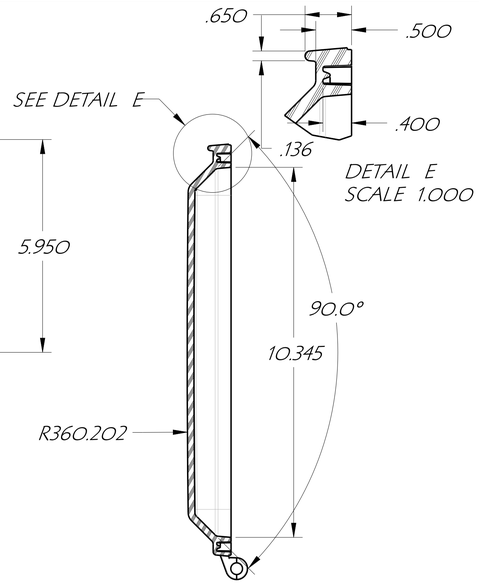

SECTION A-A

DETAIL E
SCALE 1.000

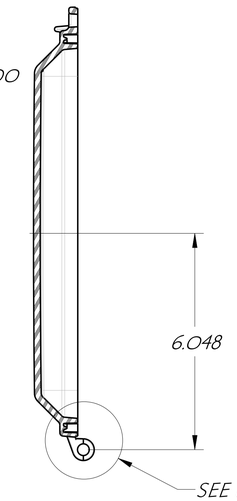

SECTION B-B

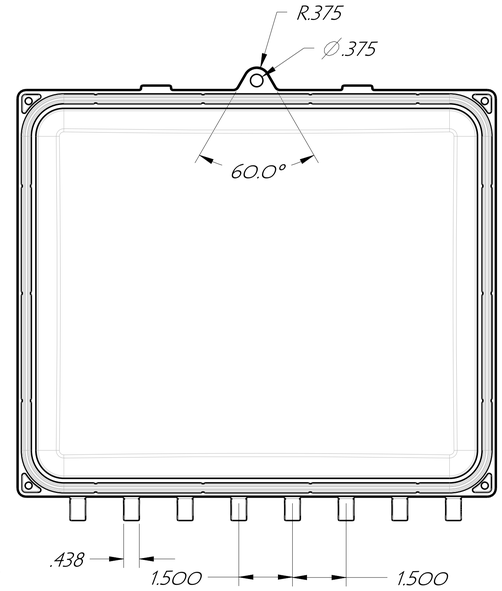

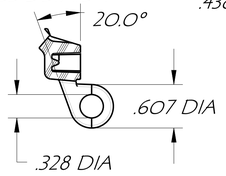

DETAIL F
SCALE 1.000

12 X 10 LID

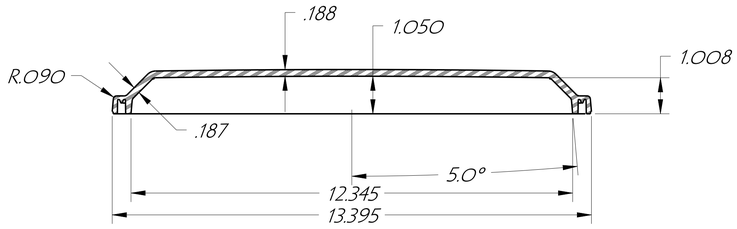

SECTION C-C

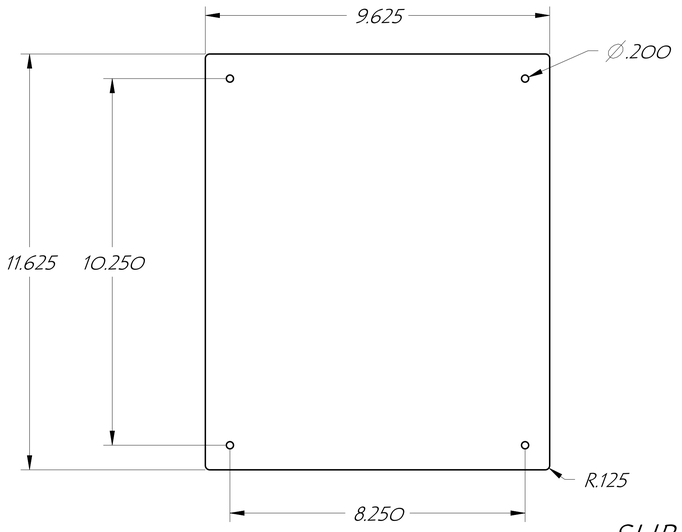

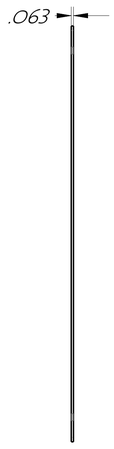

SUB PANEL OR SWING PANEL

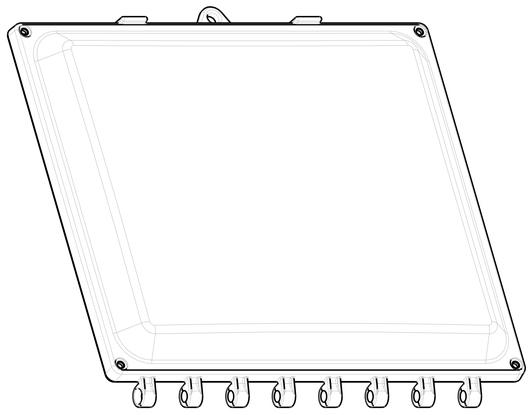

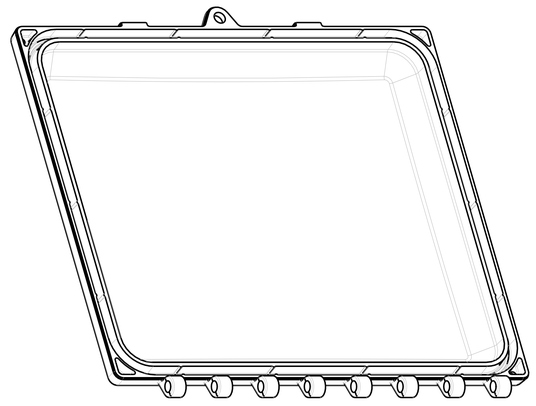

DES. C.R.W.	DRN. C.R.W.	CHKD.		ATTABOX	CUSTOMER
APP.	DATE 10/16/07	SCALE			
TOLERANCES:	2 PLACE DEC. ±.010	FRAC. ±1/64		PART NAME ENCLOSURE & LID	PART NO.
UNLESS OTHERWISE SHOWN	3 PLACE DEC. ±.005			PART MAT'L POLYCARBONATE	
	4 PLACE DEC. ±.0005			TOOL DESC. SINGLE CAVITY INJECTION MOLD	SHRINK .006/IN. SHEET OF

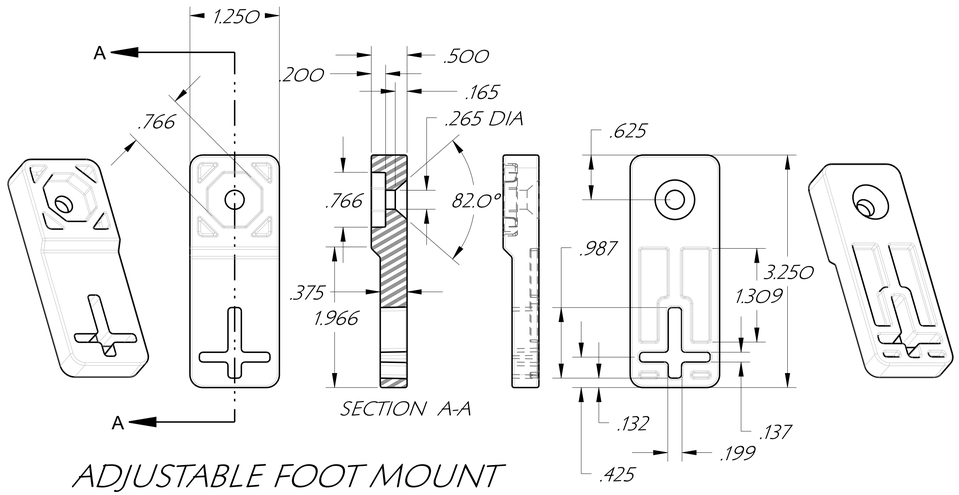

ADJUSTABLE FOOT MOUNT



LID HINGE CAP

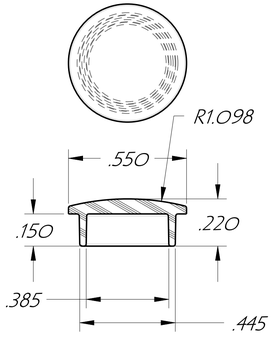

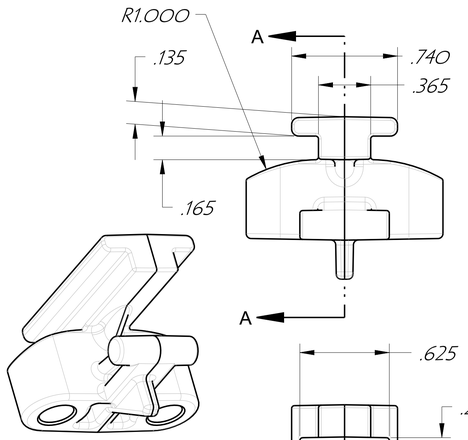

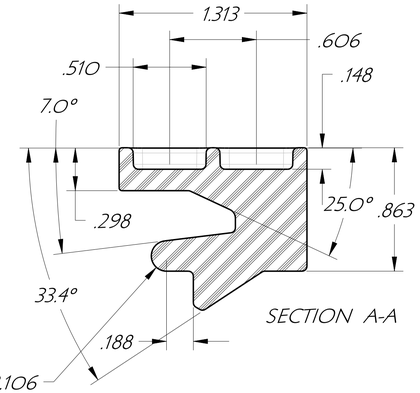

FLUSH PANEL MOUNT

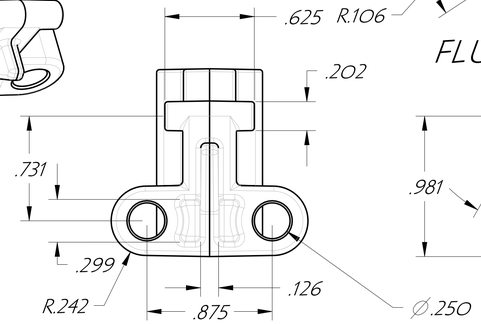

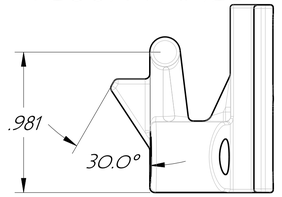

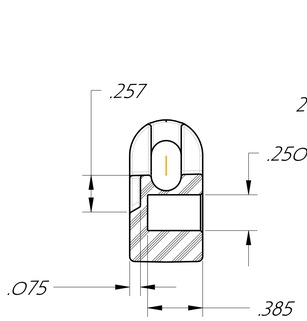

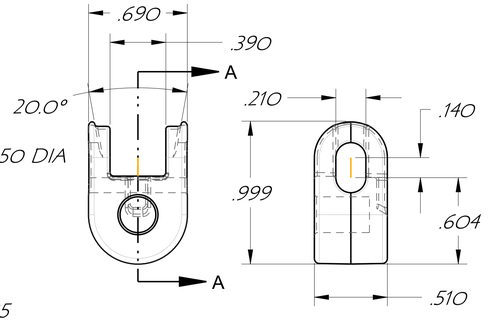

RETRACTING PANEL HINGE

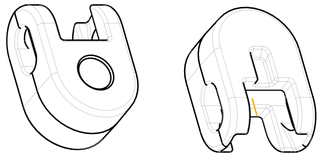

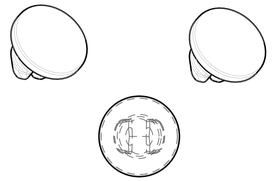

PLUG

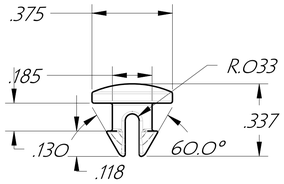

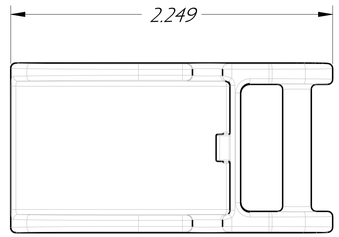

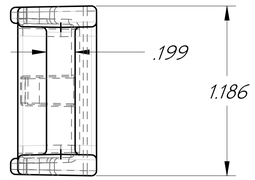

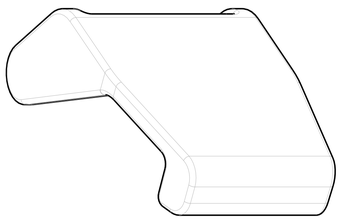

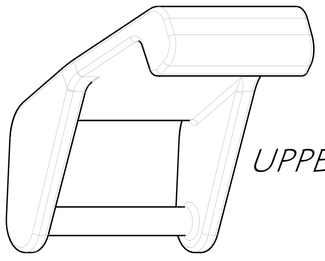

UPPER LATCH

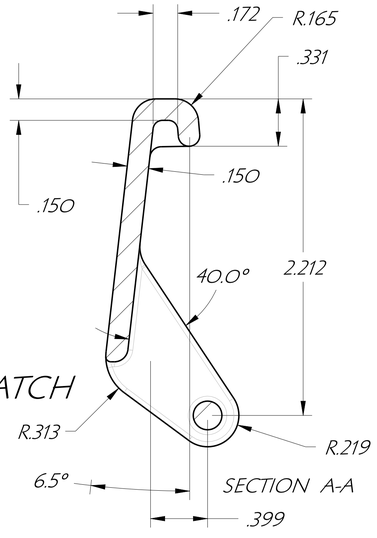

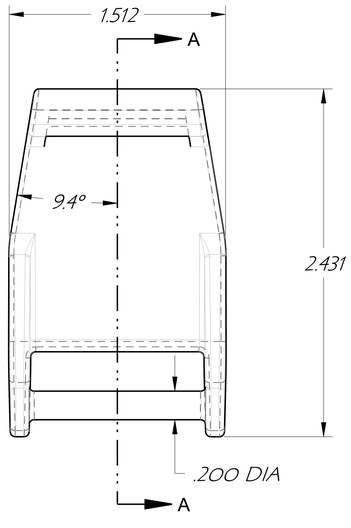

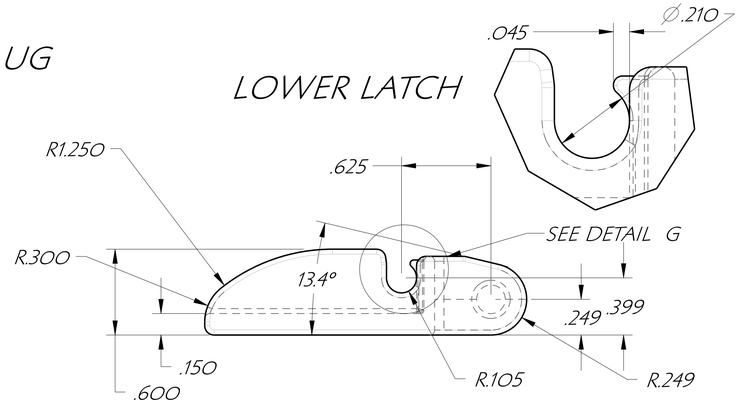

LOWER LATCH

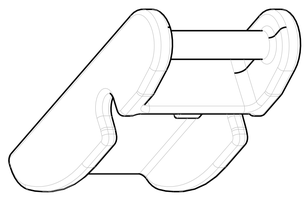

DES. C.R.W.	DRN. C.R.W.	CHKD.	ATTABOX		CUSTOMER
APP.	DATE 10/16/07	SCALE			
TOLERANCES:	2 PLACE DEC. ±.010	FRAC. ±1/64	PART NAME ENCLOSURE & LID	PART NO.	PART MAT'L POLYCARBONATE
	3 PLACE DEC. ±.005				
UNLESS OTHERWISE SHOWN	4 PLACE DEC. ±.0005		TOOL DESC. SINGLE CAVITY INJECTION MOLD	SHRINK .006/IN.	SHEET OF