Features

- Interface Modules provide isolated safety output contacts for a primary safety device (for example, a safety light screen or safety module) that has solid-state or hard contact outputs and external device monitoring (EDM) capability.
- Model IM-T-9A features three normally open 6 amp redundant-output channels.
- Model IM-T-11A features two normally open redundant output channels and one normally closed non-safety auxiliary output channel, all rated at 6 amps.
- Normally closed outputs for connection to the primary safety device's monitoring input.
- 24 V DC operation
- 22.5 mm (0.9 inch) DIN-rail-mountable housing
- Convenient plug-in terminal blocks



Interface Module Overview

The IM-T-9A and -11A Interface Module operates on 24 V DC inputs and provides isolated redundant output channels for interfacing DC safety controls (such as safety light screens or other safety modules) to safety circuits. The Interface Module can also be used to switch low power capacity of safety controls with low current output rating (see wiring diagrams and the output configuration specifications).

The outputs of the Interface Module will follow the action of the safety outputs from the primary safety device which control it, within a 20 millisecond switching delay time. The Interface Module's normally open outputs each are rated for up to 250 V AC/DC at up to 6 amps. (See "IM-T-9A and 11A Specifications" on page 9 for derate curves.)

The Interface Module offers a series connection of normally closed contacts (labeled Y1-Y2 and Y3-Y4) for monitoring by the external device monitoring (EDM) function of the primary safety device. These forced-guided (mechanically-linked) contacts allow the safety device to detect failures of the Interface Module, and at a minimum, must be monitored in applications requiring Control Reliability per OSHA/ANSI or Category 3 or 4 per ISO13849-1.

WARNING:

- **Not a stand-alone safeguarding device**
- Failure to properly safeguard hazards according to a risk assessment, local regulations, and applicable standards might lead to serious injury or death.
- This Banner Engineering Corp. device is considered complementary equipment that is used to augment safeguarding that limits or eliminates an individual's exposure to a hazard without action by the individual or others.

Important... read this before proceeding

The user is responsible for satisfying all local, state, and national laws, rules, codes, and regulations relating to the use of this product and its application. Banner Engineering Corp. has made every effort to provide complete application, installation, operation, and maintenance instructions. Please contact a Banner Applications Engineer with any questions regarding this product.

The user is responsible for making sure that all machine operators, maintenance personnel, electricians, and supervisors are thoroughly familiar with and understand all instructions regarding the installation, maintenance, and use of this product, and with the machinery it controls. The user and any personnel involved with the installation and use of this product must be thoroughly familiar with all applicable standards, some of which are listed within the specifications. Banner Engineering Corp. makes no claim regarding a specific recommendation of any organization, the accuracy or effectiveness of any information provided, or the appropriateness of the provided information for a specific application.

Applicable U.S. Standards

ANSI B11 Standards for Machine Tools Safety

ANSI B11.0 Safety of Machinery

ANSI B11.19 Performance Requirements for Risk Reduction Measures: Safeguarding and Other Means of Reducing Risk

NFPA 79 Electrical Standard for Industrial Machinery

ANSI/RIA R15.06 Safety Requirements for Industrial Robots and Robot Systems

Applicable International Standards

ISO 12100 Safety of Machinery – General Principles for Design – Risk Assessment and Risk Reduction

ISO 13849-1 Safety of Machinery – Safety-Related Parts of Control Systems – Part 1: General Principles for Design

IEC 62061 Safety of Machinery – Functional Safety of Safety-Related Control Systems

Original Instructions
05-Nov-25

© Banner Engineering Corp. All rights reserved.
www.bannerengineering.com

62822
p/n: 62822 Rev. J

ПРОМЭЛЕКТРОНИКА/ sales@prom-elec.com

EN 60204-1 Electrical Equipment of Machines Part 1: General Requirements

- Also, acquire a type "C" standard for your specific machinery

Status Indicators

Two green indicator LEDs on the front of each Interface Module indicate the output status of internal relays K1 and K2.

Interface Module Status Indicators

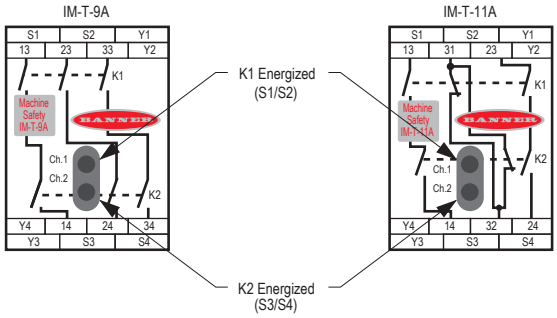

Primary Safety Device Requirements

IM-T-9A and -11A Interface Module are driven by one or two safety output channels of a primary safety device. For higher risk applications, the design of the primary safety device must meet OSHA/ANSI control reliability requirements (U.S. applications) or ISO/IEC/EN Category 3 or 4, Performance Level d or e. The appropriate safety circuit integrity can be determined via a risk assessment (e.g. ANSI B11.0, ISO 12100) and as described by ANSI B11.19, ISO 13849-1 or other relevant standards. The Interface Module must be used only with primary safety devices that have External Device Monitoring capability (see wiring figures and the Warning Interfacing MPCEs).

At a minimum, each output channel of the primary safety device must:

- Include one normally open forced-guided (mechanically linked) contact, or
- Include one solid-state 24 V DC sourcing safety output (OSSD), and
- Be self-monitored to result in a safe (OFF) condition in the event of a failure, and
- Be capable of switching 50 mA at 24 V DC ± 15%.

NOTE: As OSSD solid-state outputs on primary safety devices very often are pulsed, it is possible that the relay coils will produce an audible buzzing. This relay buzzing does not affect the function of the Interface Module, as long as the pulse width is below 500 µs (microseconds) and the duty cycle (t1/ t2) is greater than 500.

Final Switching Device (FSD): The component of the machine's safety-related control system that interrupts the circuit to the machine primary control element (MPCE) when the output signal switching device (OSSD) goes to the OFF-state.

Output Signal Switching Device (OSSD): The component of the electro-sensitive protective equipment (ESPE) connected to the control system of the machine which, when the sensing device is actuated during normal operation, responds by going to the OFF-state.

Requirements for pulsed output signals from a primary safety device

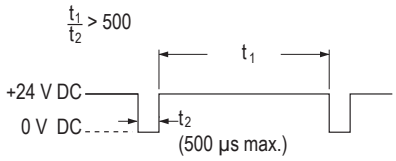

WARNING: Not for use as a safety monitoring module

1. DO NOT connect E-stop switches, 2-hand control actuators/switches, safety interlock switches, or similar devices directly to this Interface Module.
2. ALWAYS connect terminals Y1-Y2 and Y3-Y4 of this Interface Module to the monitoring input of the primary safety device that controls it.

This Interface Module does not have the circuitry required to perform a self-check. A single fault inside the unit or in external devices (like switches or emergency stop buttons) can go undetected and create an unsafe condition. Failure to properly connect this Interface Module to a primary safety device with a monitoring function could result in serious injury or death.

© Banner Engineering Corp. All rights reserved.
www.bannerengineering.com

Mechanical Installation

The Interface Module must be installed inside an enclosure.

It is not designed for exposed wiring. It is the user's responsibility to house the Interface Module in an enclosure with NEMA 3 (IEC IP54) rating, or better. The Interface Module mounts directly to standard 35 mm DIN rail.

Heat Dissipation Considerations: For reliable operation, ensure that the operating specifications are not exceeded. The enclosure must provide adequate heat dissipation so that the air closely surrounding the Interface Module does not exceed the maximum operating temperature stated in the Specifications. Methods to reduce heat build-up include venting, forced airflow (for example, exhaust fans), adequate enclosure exterior surface area, and spacing between modules and other heat sources.

Electrical Installation

WARNING:
- **Risk of electric shock**
- Use extreme caution to avoid electrical shock. Serious injury or death could result.
- Always disconnect power from the safety system (for example, device, module, interfacing, etc.), guarded machine, and/or the machine being controlled before making any connections or replacing any component. Lockout/tagout procedures might be required. Refer to OSHA 29CFR1910.147, ANSI Z244-1, or the applicable standard for controlling hazardous energy.
- Make no more connections to the device or system than are described in this manual. Electrical installation and wiring must be made by a Qualified Person[1] and must comply with the applicable electrical standards and wiring codes, such as the NEC (National Electrical Code), NFPA 79, or IEC 60204-1, and all applicable local standards and codes.

WARNING:
- **Determine the safety category**
- The design and installation of the safety devices and the means of interfacing of those devices could greatly affect the level of safety circuit integrity.
- Perform a risk assessment to determine the appropriate safety circuit integrity level or safety category, as described by ISO 13849-1, to ensure that the expected risk reduction is achieved and that all applicable regulations and standards are met.

CAUTION: Proper fusing or current limiting is required to protect the primary safety device with relay outputs in the event of a short circuit between wires leading to terminals S1/S2 and S3/S4. See Required Overcurrent Protection in the Specifications.

It is not possible to give exact wiring instructions for a Safety Module that interfaces to a multitude of machine control configurations. The following guidelines are general in nature.

The Safety Module has no delay function. Its output relay contacts open within **20 milliseconds** after a safety input opens. This classifies the Safety Module as functional stop "Category 0" control, as defined by NFPA 79 and IEC/EN 60204-1.

The inputs can be connected to (that meet the requirements for primary safety device above):

- A +24 V DC solid-state (PNP) outputs in single-channel or dual-channel wiring configuration, or
- A +24 V/0 V DC source that is switched by hard/relay contacts in single-channel or dual-channel wiring configuration.

The dual-channel wiring configuration allows the primary safety device to detect certain failures and faults, such as short circuits, that could result in a loss of the safety function. Two-channel control should be used whenever unsafe failure of the control wires cannot be eliminated. The first circuit shown below can meet ISO 13849-1 Category 2, 3, or 4 requirements, depending on the safety rating and the installation of the primary safety device.

The outputs of the primary safety device must, at minimum, comply with the requirements described. These outputs must be monitored for failure by the primary safety device. In addition, a single output failure cannot prevent normal stopping action, and a successive cycle cannot be initiated until the failure has been corrected.

[1] A person who, by possession of a recognized degree or certificate of professional training, or who, by extensive knowledge, training and experience, has successfully demonstrated the ability to solve problems relating to the subject matter and work.

© Banner Engineering Corp. All rights reserved.
www.bannerengineering.com

Generalized wiring to a 2-channel primary safety device with two hard-contact safety outputs (FSD1 and FSD2) and two monitoring inputs.

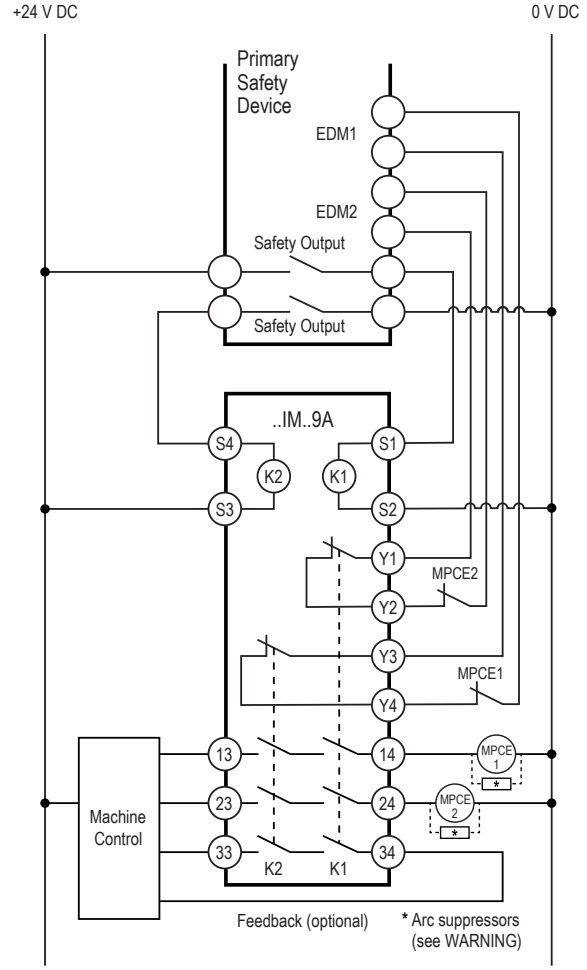

Generalized wiring to a 2-channel primary safety device with two hard-contact safety outputs and one monitoring contact feedback input.

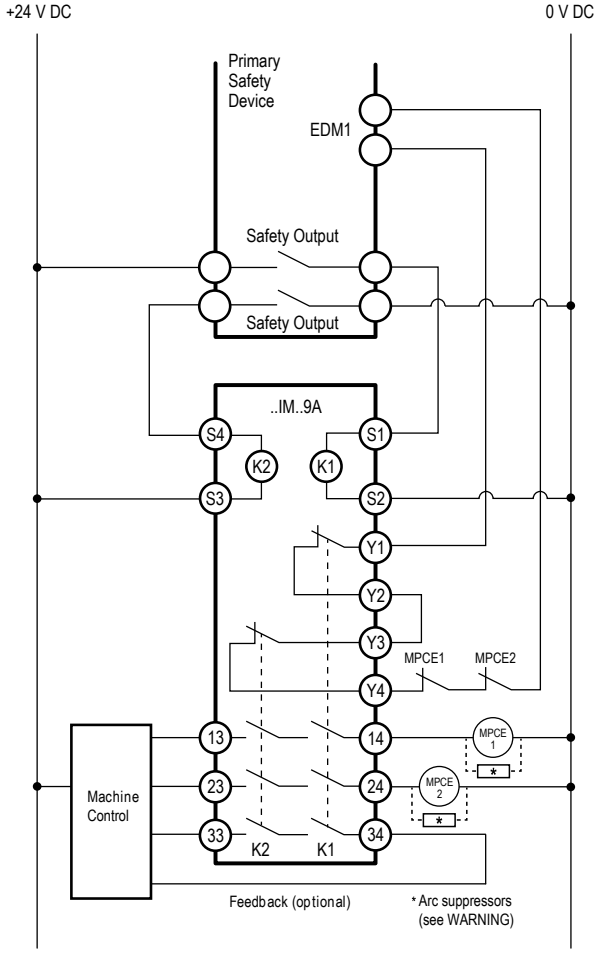

Although these wiring diagrams show model IM-T-9A, the connections for model IM-T-11A are identical.

© Banner Engineering Corp. All rights reserved.
www.bannerengineering.com

Generalized wiring to a 2-channel primary safety device with two current-sourcing safety outputs and two monitoring inputs.

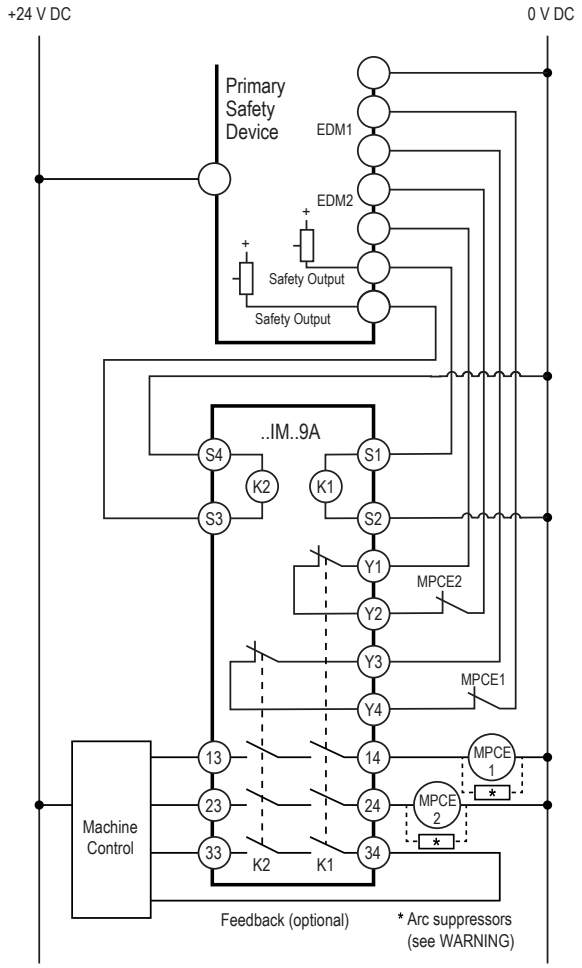

Generalized wiring to a 2-channel primary safety device with two current-sourcing safety outputs and one monitoring input.

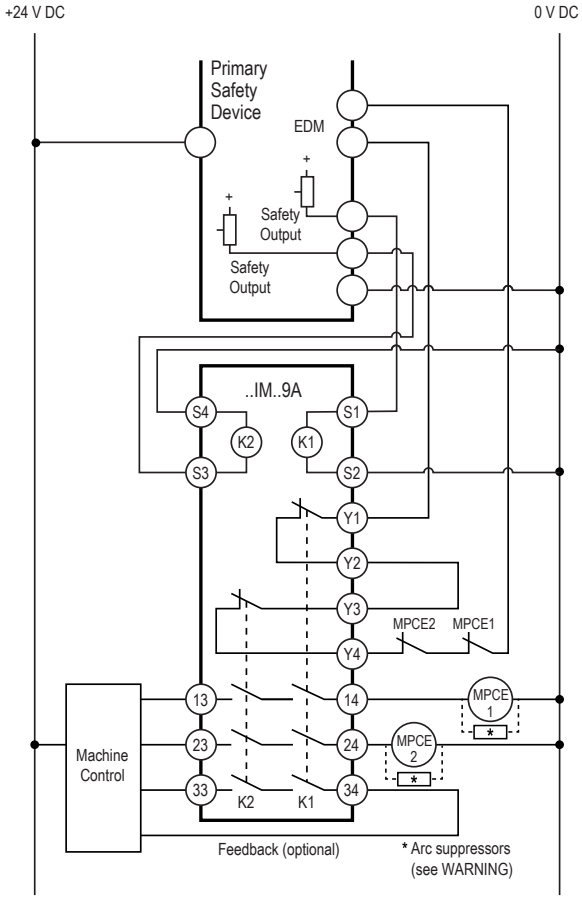

Although these wiring diagrams show model IM-T-9A, the connections for model IM-T-11A are identical.

WARNING:

- **Properly install arc or transient suppressors**
- Failure to follow these instructions could result in serious injury or death.
- Install any suppressors as shown across the coils of the machine primary control elements. Do not install suppressors directly across the output contacts of the safety or interface module. In such a configuration, it is possible for suppressors to fail as a short circuit.

© Banner Engineering Corp. All rights reserved.
www.bannerengineering.com

Generalized wiring to a primary safety device with one redundant relay safety output (one-channel control) and one monitoring input.

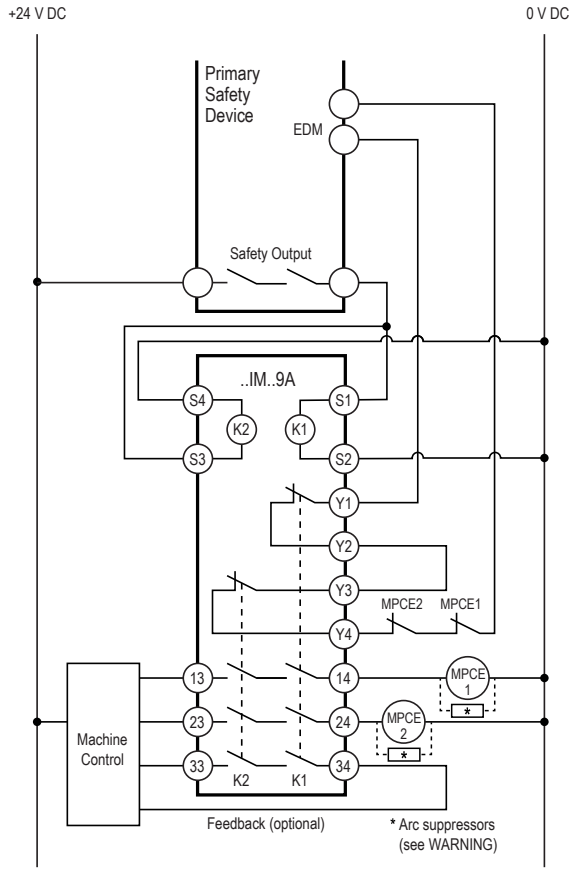

CAUTION: Single-channel wiring. Installation of single-channel (one-channel) control of the Interface Module must reduce the risk of a short-circuit resulting in the loss of switching action and the safety function to an appropriate level as determined by a risk assessment.

Although this wiring diagram shows model IM-T-9A, the connection for model IM-T-11A is identical.

The single-channel input wiring configuration can not detect short circuits to secondary sources of +24 V DC or detect the loss of the switching function of the primary safety device (i.e., it is not redundant) and thus this circuit typically can meet only ISO 13849-1 Category 2.

It is recommended that in all circumstances the installation of the Interface Module and its associated primary safety device are installed to eliminate or minimize the possibility of failures and faults that could result in the loss of the safety function(s). Methods to eliminate or minimize the possibility of these failures include, but are not limited to:

- Physically separating interconnecting control wires from each other and from secondary sources of power.
- Routing interconnecting control wires in separate conduit, runs, or channels.
- Locating all elements (modules, switches, and devices under control) within one control panel, adjacent to each other, and directly connected with short wires.
- Properly installing multi-conductor cabling and multiple wires through strain-relief fittings. (Overtightening of a strain-relief can cause short circuits at that point.)
- Periodically checking the functional integrity/safety function and training operators, maintenance personnel, and others associated with the operation of the machine to recognize and immediately correct such failures.

If you have any questions about your intended use, please contact a Banner applications engineer at the numbers listed on the last page.

Connection to the Machine to be Controlled

The wiring diagrams show a generic connection of two safety output channels of the Interface Module to Machine Primary Control Elements MPCE1 and MPCE2. A Machine Primary Control Element is an electrically powered device, external to the Interface Module, which stops the machinery being controlled by immediately removing electrical power from the machine and (when necessary) by applying braking to dangerous motion.

© Banner Engineering Corp. All rights reserved.
www.bannerengineering.com

Interface Module Pinouts

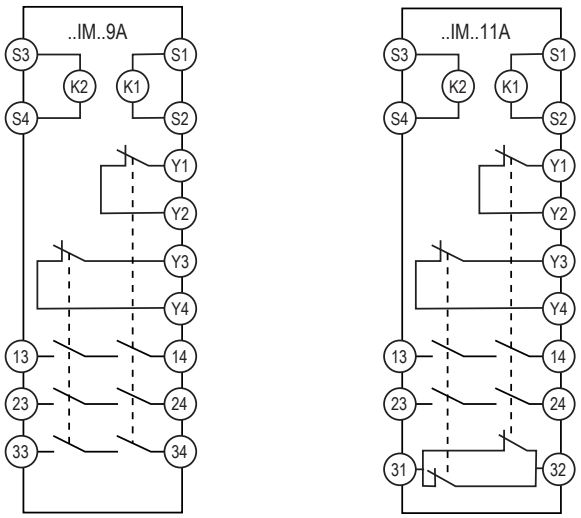

External Device Monitoring

To satisfy the requirements of Control Reliability (OSHA and ANSI), Category 3 and 4 of ISO 13849-1, the Machine Primary Control Elements (MPCEs) must each offer a normally closed, forced-guided (mechanically linked) monitor contact. Connect one normally closed monitor contact from each Machine Primary Control Element as shown in the appropriate hookup drawing (on previous pages).

In operation, if one of the switching contacts of either MPCE fails in the energized condition, the associated monitor contact will remain open. Therefore, it will not be possible to reset the Primary Safety Device. If no MPCE-monitor contacts are monitored, it is the user's responsibility to ensure that any single failure will not result in a hazardous condition and will prevent a successive machine cycle.

Overvoltage Category II and III Installations (EN 50178 and IEC 60664-1)

The Interface Module is rated for Overvoltage Category III when voltages of 1 V to 150 V AC/DC are applied to the output relay contacts. It is rated for Overvoltage Category II when voltages of 151 V to 250 V AC/DC are applied to the output relay contacts and no additional precautions are taken to attenuate possible overvoltage situations in the supply voltage. The Interface Module can be used in an Overvoltage Category III environment (with voltages of 151 V to 250 V AC/DC) if care is taken either to reduce the level of electrical disturbances seen by the Interface Module to Overvoltage Category II levels by installing surge suppressor devices (for example, arc suppressors), or to install extra external insulation in order to isolate both the Interface Module and the user from the higher voltage levels of a Category III environment.

For Overvoltage Category III installations with applied voltages from 151 V to 250 V AC/DC applied to the output contact(s): the Interface Module may be used under the conditions of a higher overvoltage category where appropriate overvoltage reduction is provided. Appropriate methods include:

- An overvoltage protective device
- A transformer with isolated windings
- A distribution system with multiple branch circuits (capable of diverting energy of surges)
- A capacitance capable of absorbing energy of surges
- A resistance or similar damping device capable of dissipating the energy of surges

When switching inductive AC loads, it is good practice to protect the Interface Module outputs by installing appropriately-sized arc suppressors. However, if arc suppressors are used, they must be installed across the load being switched (for example, across the coils of external safety relays), and never across the Interface Module’s output contacts.

Auxiliary Monitor Contact (Model ..11A Only)

The action of the auxiliary monitor contact, terminals 31-32, inversely "follows" the action of the safety outputs. The 31-32 auxiliary monitor contact is to be used only for control functions that are NOT safety-related. A typical use is to communicate the status of the Interface Module output to a programmable logic controller (PLC).

Many types of mechanisms are used to arrest dangerous machine motion. Examples include mechanical braking systems, clutch mechanisms, and combinations of brakes and clutches. Additionally, control of the arresting scheme may be hydraulic or pneumatic. As a result, an MPCE may be one of several control types, including a wide variety of contactors and electromechanical valves. If your machine documentation leaves any doubt about the proper connection points for the Interface Module output contacts, do not make any connections. Contact the machine builder for clarification regarding connection to the MPCEs.

Two-Channel Control: Two-channel control allows the Primary Safety Device to detect an unsafe failure of the control wires. Two-channel control should be used whenever unsafe failure of the control wires cannot be eliminated.

© Banner Engineering Corp. All rights reserved.
www.bannerengineering.com

The outputs of the primary safety device must at minimum, comply with the requirements described on page 5. These outputs must be monitored for failure by the primary safety device. In addition, a single output failure cannot prevent normal stopping action, and a successive cycle cannot be initiated until the failure has been corrected.

NOTE: NOTICE regarding MPCEs To achieve control reliability, two Machine Primary Control Elements (MPCEs) are required to control each machine hazard. Each MPCE must be capable of immediately stopping the dangerous machine motion, irrespective of the state of the other. Some machines offer only one primary control element. For such machines, it is necessary to duplicate the circuit of the single MPCE to add a second MPCE.
MPCEs must offer at least one forced-guided auxiliary contact which is wired to the monitoring contact feedback input of the primary safety device (see hookup diagrams).

WARNING: Interfacing MPCEs.
NEVER wire any intermediate device(s) (e.g., PLC, PES, PC), between the Interface Module outputs and the Machine Primary Control Elements (MPCE1 to MPCE3) it switches, in such a manner that in the event of a failure there is the loss of the safety stop command, OR in such a manner that the safety function can be suspended, overridden, or defeated, unless accomplished with the same or greater degree of safety. Whenever forced-guided, mechanically linked relays are added as intermediate switching devices, a normally closed forced-guided monitor contact from each relay must be added to the series feedback loop between Interface Module terminals Y1, Y2, Y3, and Y4.

Initial and Periodic Checkout Procedure

The Interface Module can be used safely only when its operation is controlled via an appropriate primary safety device, connected to the Interface according to the wiring diagrams shown in the wiring diagrams.

CAUTION:
- **Disconnect power prior to checkout**
- Dangerous voltages might be present along the module wiring barriers whenever power to the machine control elements is on.
- Before performing the initial checkout procedure, disconnect all power from the machine to be controlled. Exercise extreme caution whenever machine control power is or might be present. Always disconnect power to the machine control elements before opening the enclosure housing of the module.

The functioning of the Interface Module and the device(s) connected to it must be verified at initial installation and on a regular periodic basis to ensure proper operation (see also the machine manufacturer's recommendations).

1. Remove the power controlling (and switched by) the machine control elements.
2. Verify the primary safety device that will be controlling the Interface Module is operating correctly, according to its product documentation and manufacturer’s recommendations.
3. Confirm proper connection of the Interface Module to the controlling primary safety device according to the wiring diagram.
4. Verify all Interface Module output contacts follow exactly the operation of the safety output contacts of the controlling primary safety device, when the primary safety device is operated according to its product documentation and manufacturer’s recommendations.
5. Close and secure the enclosure in which the Safety Module is mounted.
6. Apply power to the machine control elements and perform the Periodic Checkout Procedure of the Primary Safety Device.

Repairs

Contact Banner Engineering for troubleshooting of this device. **Do not attempt any repairs to this Banner device; it contains no field-replaceable parts or components.** If the device, device part, or device component is determined to be defective by a Banner Applications Engineer, they will advise you of Banner's RMA (Return Merchandise Authorization) procedure.

Obtain assistance with product repairs by contacting your local Banner Engineering Corp distributor or by calling Banner directly at (763) 544-3164. Access literature translated into your native language on the Banner website at www.bannerengineering.com or contact Banner directly at (763) 544-3164.

Para reparaciones de productos, por favor contacte a su distribuidor local de Banner Engineering o llame a Banner directamente al 00 1 (763) 544-3164. Vea la literatura traducida en su idioma en el sitio web Banner en www.bannerengineering.com o comuníquese con Banner directamente al 00 1 (763) 544-3164.

Pour vous aider lors de la réparation de produits, contactez votre distributeur Banner local our appelez directement Banner au (763) 544-3164. La documentation traduite dans votre langue est disponible sur le site internet de Banner www.bannerengineering.com ou contactez directement Banner au (763) 544-3164.

请联系当地的 Banner Engineering Corp 经销商或直接致电 Banner +1 (763) 544-3164，以获得产品维修帮助。请访问邦纳网站 www.bannerengineering.com 或直接拨打 +1 (763) 544-3164 联系邦纳，获取翻译成您母语的资料。

© Banner Engineering Corp. All rights reserved.
www.bannerengineering.com

제품 수리에 대한 지원은 지역 Banner Engineering Corp 대리점에 문의하거나 Banner에 직접 (763) 544-3164로 문의하실 수 있습니다. 사용자의 모국어로 번역된 자료는 Banner 웹사이트 www.bannerengineering.com에서 액세스하거나 Banner에 직접 (763) 544-3164로 문의하실 수 있습니다.

IMPORTANT: If instructed to return the device, pack it with care. Damage that occurs in return shipping is not covered by warranty.

WARNING:

- **Do not abuse the module after failure**—If an internal fault has occurred and the module will not reset, do not tap, strike, or otherwise attempt to correct the fault with a physical impact to the housing.
- Failure to follow these instructions could result in serious injury or death.
- An internal relay might have failed in such a manner that its replacement is required. If the module is not immediately replaced or repaired, multiple simultaneous failures might accumulate such that the safety function cannot be guaranteed.

Specifications

Input Voltage and Current

24 V DC, ±15% no polarity, 10% maximum ripple; 50 mA per input channel (approximately 2.4 W)

Supply Protection Circuitry

Protected against transient voltages

Overvoltage Category

Output relay contact voltage of 1 V to 150 V AC/DC: Category III

Output relay contact voltage of 151 V to 250 V AC/DC: Category II (Category III, if appropriate overvoltage reduction is provided)

Vibration Resistance

10 HZ to 55 Hz at 0.35 mm displacement per IEC 60068-2-6

Pollution Degree

2

Status Indicators

Two green LED indicators: K1 energized, K2 energized

Construction

Polycarbonate housing rated NEMA 1, IEC IP20

Terminal Torque

0.8 N·m (7 lb-in)

Maximum Wire Cross-Section for Connection

Each 1 × 2.5 mm^2 stranded ferruled

Each 1 × 4 mm^2 solid

Each 2 × 1.5 mm^2 stranded ferruled

Mounting

Mounts to standard 35 mm DIN-rail track. The Interface Module must be installed inside an enclosure rated NEMA 3 (IEC IP54), or better.

Application Notes

There are no adjustments and no user-serviceable parts. See "Repairs" on page 8 for information regarding repair service.

Outputs

IM-T-9A: Three normally open output channels

IM-T-11A: Two normally open output channels and one normally closed auxiliary output channel

Each normally open output channel is a series connection of contacts from two forced-guided (mechanically linked) relays, K1-K2. The normally closed contact 31-32 is a parallel connection of contacts from K1-K2.

Output Low Current Rating

The 5 µm gold-plated contacts allow the switching of low current/low voltage. In these low-power applications, multiple contacts can also be switched in series (e.g., “dry switching”). To preserve the gold plating on the contacts, do not exceed the following max. values at any time:

Min. voltage: 1 V AC/DC

Max. voltage: 60 V

Min. current: 5 mA AC/DC

Max. current: 300 mA

Min. power: 5 mW (5 mVA)

Max. power: 7 W (7 VA)

Output High Current Rating

If higher loads must be switched through one or more of the contacts, the minimum and maximum values of the contact(s) changes to:

Minimum voltage: 15 V AC/DC

Maximum voltage: 250 V AC / 24 V DC, 6A resistive

Minimum current: 30 mA AC/DC

Minimum power: 0.45 W (0.45 VA)

Maximum power: 150 W (1,500 VA)

IEC 60947-5-1: AC-15: 230 V AC, 3A: DC-13: 24 V DC, 4 A

Contacts

AgNi, 5 µm gold-plated

Outputs Response Time

20 milliseconds maximum

Mechanical life

20,000,000 operations

Electrical life

150,000 cycles at 1,500 VA; 1,000,000 cycles at 450 VA; 2,000,000 cycles at 250 VA; 5,000,000 cycles at 125 VA

NOTE: Transient suppression is recommended when switching inductive loads. Install suppressors across load. Never install suppressors across output contacts (see Arc Suppressors Warning).

© Banner Engineering Corp. All rights reserved.
www.bannerengineering.com

Feedback contact rating (Y1-Y2, Y3-Y4)

Minimum voltage: 1 V AC/DC
Maximum voltage: 60 V
Minimum current: 5 mA AC/DC
Maximum current: 300 mA
Minimum power: 5 mW (5 mVA)
Maximum power: 7 W (7 VA)

B10d Values

Voltage	Current	B10d
230 V AC	2 A	350,000
230 V AC	1 A	1,000,000
24 V DC	4 A	2,000,000
24 V DC	≤ 2 A	8,000,000

Operating Conditions

0 °C to +50 °C (+32 °F to +122 °F)
90% at +50 °C maximum relative humidity (non-condensing)

Certifications

Design Standards: EN 60947-1, EN 60947-5-1, EN 60068-2-6, EN 60068-2-27

Banner Engineering BV
Park Lane, Culliganlaan 2F bus 3
1831 Diegem, BELGIUM

Turck Banner LTD Blenheim House
Blenheim Court
Wickford, Essex SS11 8YT
GREAT BRITAIN

IND. CONT. EQ.
447Y

Required Overcurrent Protection

WARNING: Electrical connections must be made by qualified personnel in accordance with local and national electrical codes and regulations.

Overcurrent protection is required to be provided by end product application per the supplied table.

Overcurrent protection may be provided with external fusing or via Current Limiting, Class 2 Power Supply.

Supply wiring leads < 24 AWG shall not be spliced.

For additional product support, go to www.bannerengineering.com.

Supply Wiring (AWG)	Required Overcurrent Protection (A)	Supply Wiring (AWG)	Required Overcurrent Protection (A)
20	5.0	26	1.0
22	3.0	28	0.8
24	2.0	30	0.5

© Banner Engineering Corp. All rights reserved.
www.bannerengineering.com

Dimensions

Interface module dimensions

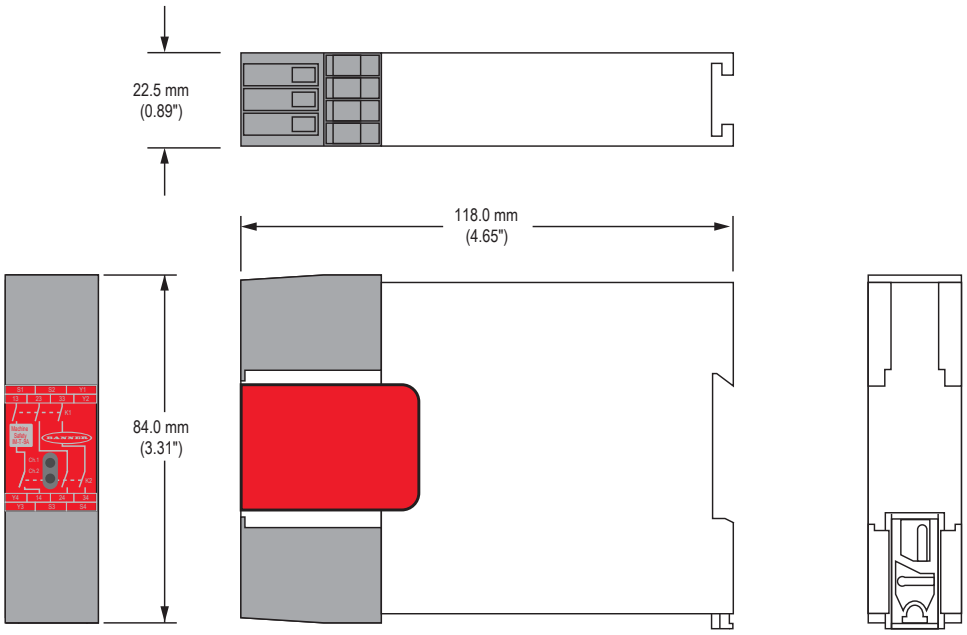

Front label for model IM-T-9A

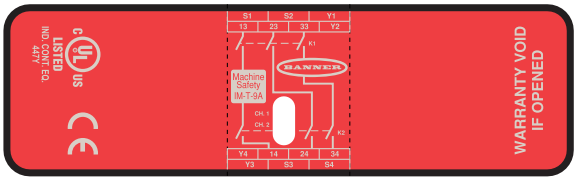

EU/UK Declaration of Conformity (DoC)

Banner Engineering Corp. herewith declares that these products are in conformity with the provisions of the listed directives and all essential health and safety requirements have been met. For the complete DoC, please go to www.bannerengineering.com.

Product	Directive
IM-T-9A and IM-T-11A Interface Modules	EU: Low Voltage Directive 2014/35/EU; EMC Directive 2014/30/EU; RoHS Directives 2011/65/EU as amended by 2015/863/EU
	UKCA: Electrical Equipment (Safety) Regulations 2016; EMC Regulations 2016; RoHS Regulations 2012

Representative in EU: Spiros Lachandidis, Managing Director, **Banner Engineering BV** Park Lane | Culliganlaan 2F bus 3 | 1831 Diegem, BELGIUM

Representative in UK: Tony Coghlan, Managing Director, **Turck Banner LTD** Blenheim House | Blenheim Court | Wickford, Essex SS11 8YT | Great Britain

Banner Engineering Corp Limited Warranty

Banner Engineering Corp. warrants its products to be free from defects in material and workmanship for one year following the date of shipment. Banner Engineering Corp. will repair or replace, free of charge, any product of its manufacture which, at the time it is returned to the factory, is found to have been defective during the warranty period. This warranty does not cover damage or liability for misuse, abuse, or the improper application or installation of the Banner product.

THIS LIMITED WARRANTY IS EXCLUSIVE AND IN LIEU OF ALL OTHER WARRANTIES WHETHER EXPRESS OR IMPLIED (INCLUDING, WITHOUT LIMITATION, ANY WARRANTY OF MERCHANTABILITY OR FITNESS FOR A PARTICULAR PURPOSE), AND WHETHER ARISING UNDER COURSE OF PERFORMANCE, COURSE OF DEALING OR TRADE USAGE.

This Warranty is exclusive and limited to repair or, at the discretion of Banner Engineering Corp., replacement. **IN NO EVENT SHALL BANNER ENGINEERING CORP. BE LIABLE TO BUYER OR ANY OTHER PERSON OR ENTITY FOR ANY EXTRA COSTS, EXPENSES, LOSSES, LOSS OF PROFITS, OR ANY INCIDENTAL, CONSEQUENTIAL OR SPECIAL**

© Banner Engineering Corp. All rights reserved.
www.bannerengineering.com

DAMAGES RESULTING FROM ANY PRODUCT DEFECT OR FROM THE USE OR INABILITY TO USE THE PRODUCT, WHETHER ARISING IN CONTRACT OR WARRANTY, STATUTE, TORT, STRICT LIABILITY, NEGLIGENCE, OR OTHERWISE.

Banner Engineering Corp. reserves the right to change, modify or improve the design of the product without assuming any obligations or liabilities relating to any product previously manufactured by Banner Engineering Corp. Any misuse, abuse, or improper application or installation of this product or use of the product for personal protection applications when the product is identified as not intended for such purposes will void the product warranty. Any modifications to this product without prior express approval by Banner Engineering Corp will void the product warranties. All specifications published in this document are subject to change; Banner reserves the right to modify product specifications or update documentation at any time. Specifications and product information in English supersede that which is provided in any other language. For the most recent version of any documentation, refer to: www.bannerengineering.com.

For patent information, see www.bannerengineering.com/patents.

© Banner Engineering Corp. All rights reserved.