RP-LM40 Series Rope Pull Switch

Datasheet

RP-LM40 Series 40 mm Limit-Switch-Style Switches with Rope Actuators

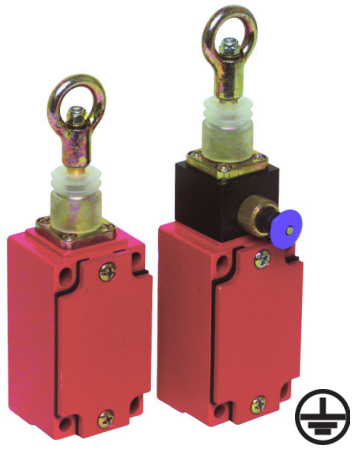

- Positive-opening safety contacts (IEC 60947-5-1), not dependent upon springs
- Standard limit-switch housing (EN 50041)
- Heavy-duty die cast metal housing, rated IP65, suitable for demanding industrial environments
- Rope spans up to 6 m (20 ft)
- Both safety contacts are closed with normal rope tension; one contact opens when rope is pulled, the other contact opens if rope breaks (or if tension is reduced from normal amount)
- Long life, switch rated at 1 million mechanical operations, minimum
- Two available models, trip and latch
- Protective Earth Terminal (IEC 60947-1)

Model	Actuation	Max. Rope Length	Run Position	Cable Pulled	Cable Break	Switching Diagram
RP-LM40D-6	Trip	6 m (20 ft)	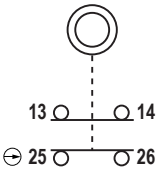	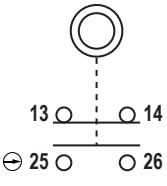	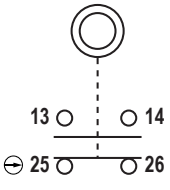	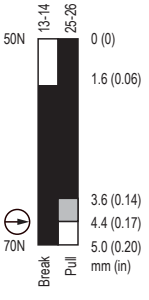
RP-LM40D-6L	Latch					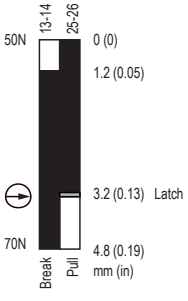

Contacts: Open Closed Transition

Note: This symbol for a positive-opening safety contact (IEC 60947-5-1) is used in the switching diagram to identify the point in actuator travel where the normally-closed safety contact is fully open.

ПРОМЭЛЕКТРОНИКА/ sales@prom-elec.com

Important... Read This First

Regarding the Use of Rope Pull Switches. In the United States, the functions that Banner rope pull switches are intended to perform are regulated by the Occupational Safety and Health Administration (OSHA). Whether or not any particular rope pull switch installation meets all applicable OSHA requirements depends upon factors that are beyond the control of Banner Engineering Corp. These factors include the details of how the switches are applied, installed, wired, operated, and maintained.

Banner Engineering Corp. has attempted to provide complete application, installation, operation, and maintenance instructions in this document. Direct any questions regarding the use or installation of rope pull switches to the factory applications department.

Banner Engineering Corp. recommends that rope pull switches be applied according to the guidelines set forth in the standards listed below. In addition, the user is responsible for ensuring all local, state, and national laws, rules, codes, and regulations relating to the use of Banner rope pull switches in each application are satisfied. Extreme care is urged that all legal requirements are met and that all installation and maintenance instructions are followed.

Applicable U.S. Standards

OSHA Code of Federal Regulations: Title 29, Parts 1900 to 1910

Available from: Superintendent of Documents, Government Printing Office, P.O. Box 371954, Pittsburgh, PA 15250-7954, Tel: 202-512-1800

ANSI B11 Standards for Machine Tools Safety

Contact: Safety Director, AMT – The Association for Manufacturing Technology, 7901 Jones Branch Drive, Suite 900, McLean, VA 22102-4206 USA, www.amtonline.org

Applicable European and International Standards

EN ISO 12100 Safety of Machinery – Basic Concepts, General Principles for Design

ISO 13852 (EN 294) Safety of Machinery—Safety Distances to Prevent Danger Zones Being Reached by the Upper Limbs

ISO 13853 (EN 811) Safety of Machinery—Safety Distances to Prevent Danger Zones Being Reached by the Lower Limbs

EN ISO 13849-1 Safety-Related Parts of Control Systems

EN 13855 (EN 999) The Positioning of Protective Equipment in Respect to Approach Speeds of Parts of the Human Body

ISO 14119 (EN 1088) Interlocking Devices Associated with Guards – Principles for Design and Selection

EN 60204-1 Electrical Equipment of Machines Part 1: General Requirements

IEC 60947-5-1 Low Voltage Switchgear – Electromechanical Control Circuit Devices

Contact: IHS Markit (Global Engineering Documents), 15 Inverness Way East, Englewood, CO 80112 USA, https://global.ihs.com/

Overview

Models RP-LM40D-6 and RP-LM40D-6L are rope pull switches in compact, limit switch-style housings. When used with steel wire rope, they can provide machine stop actuation along conveyors and similar machinery. Red PVC-covered 2 mm diameter wire rope, up to 6 m (20 ft) long is recommended.

When the rope is properly tensioned (using a turnbuckle), both contacts of the switch are closed. When the rope is pulled, the positive-break contacts between terminals 25–26 open. If the rope breaks or goes slack, the contacts between terminals 13–14 open. These two contacts typically should be wired together, in series.

These rope pull switches are not safeguarding devices; they do not protect personnel from injury. They provide the same function as other types of stop switches.

The two switch models differ in their switching operation. Model RP-LM40D-6 is a momentary switch, which returns immediately to the Run condition (i.e., both contacts close) after releasing the rope, following a Pull condition. When using this model, a separate latching circuit is required. Model RP-LM40D-6L latches contacts 25–26 open with each Pull condition, and must be reset by pulling the integral reset button.

WARNING:
- **Not a safeguarding device**
- Failure to follow these instructions could result in serious injury or death.
- This device is not considered a safeguarding device because it requires an overt action by an individual to stop machine motion or hazards. A safeguarding device limits or eliminates an individual's exposure to a hazard without action by the individual or others. This device cannot be substituted for required safeguarding. Refer to the applicable standards to determine those requirements.

Figure 1. Run Position: Proper Rope Tension

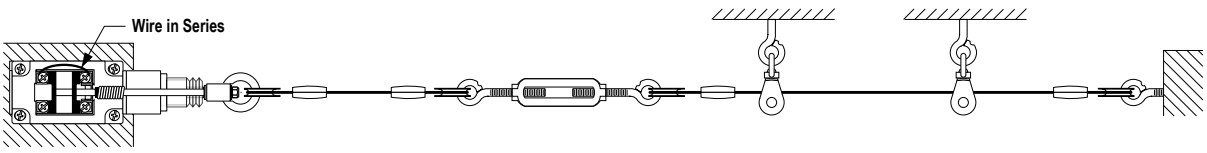

Figure 2. Rope Pulled: Contact 25-26 Opens

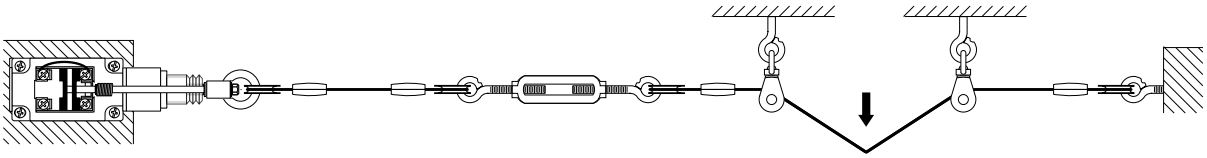

Figure 3. Rope Break or Slack: Contact 13-14 Opens

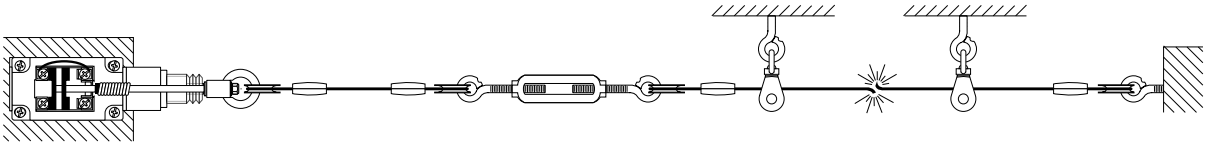

Mechanical Installation

Installation Guidelines

- The rope should be easily accessible and visible along its entire length. Markers or flags may be fixed on the rope to increase its visibility
- Mounting points, including support points, must be rigid and allow sufficient space around the rope to allow easy access
- The rope should be free of friction at all supports. Pulleys are recommended
- Use only pulleys (not eye bolts) when routing the rope around a corner or whenever direction changes, even slightly
- Never run rope through conduit or other tubing
- Never attach weights to the rope
- Temperature affects rope tension. The rope expands (lengthens) when temperature increases, and contracts (shrinks) when temperature decreases. Significant temperature variations require frequent checks of the tension adjustment
- Do not exceed the maximum specified total rope length. Banner offers models for other spans; contact Banner Engineering or visit www.bannerengineering.com for model selection

Installation Procedure

1. Mount the switch securely on a solid, stationary surface.
2. Fasten an eye bolt at the opposite end of the rope span, up to 6 m (20 ft) from the switch. The anchor for the eye bolt also must be solid and stationary, to withstand the constant tension of the rope.
3. Assemble the rope as shown. Keep the rope's PVC cover intact along its complete length. Note: A tensioning spring is required to ensure compliance with direction-independent actuation of the wire rope.
4. Use pulleys (recommended) or eye bolts at each support point. A pulley must be used when routing the rope around a corner, regardless of the angle.
5. Connect a continuity tester (or ohmmeter) between terminals 25–26 of the switch. Adjust the turnbuckle to tighten the rope, until contact 25–26 closes. This indicates sufficient rope tension.
6. Pull hard on the rope several times. If contact 25–26 remains open (following reset, for model RP-LM40D-6L), further tighten the turnbuckle, until contact 25–26 closes.
7. Repeat step 6 until contact 25–26 remains closed for the Run condition.

Figure 4. Assembly of Rope and Hardware

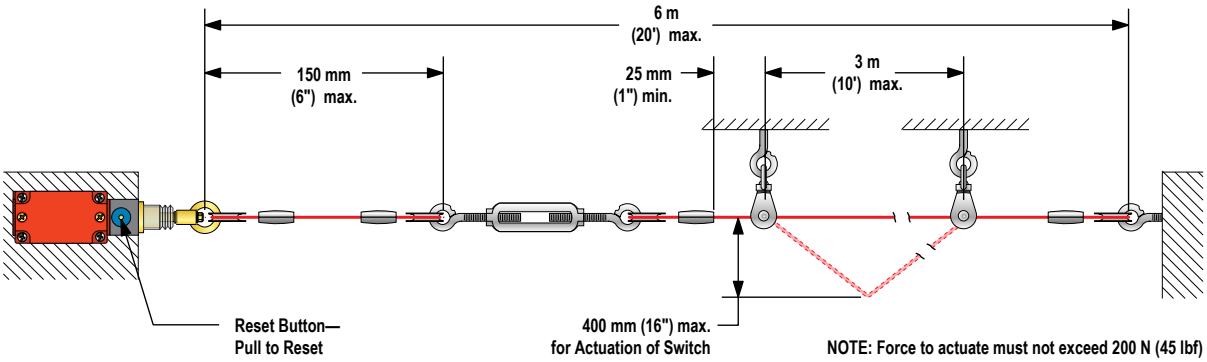

All hardware is supplied by the user. The switch mounting holes are on a standard limit switch mounting pattern of 30 x 60 millimeters, and accept M5 (#10) hardware. Wire rope and associated hardware may be ordered separately; see Accessories on page 6.

Electrical Installation

Figure 5. Wire the two switch contacts in series

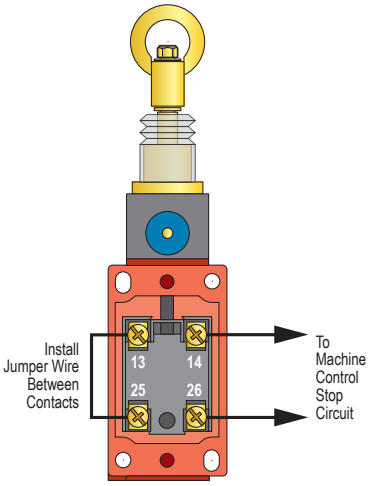

Access to the Wiring Chamber. The wiring chamber is accessed via a cover plate (remove two screws). A conduit adapter is supplied to convert the 20 millimeter threaded entrance to 1/2" NPT. An accessory cable gland which fits the M20 thread is also available.

Wiring. Install a jumper wire to place the two switch contacts in series, as shown.

Important: Model RP-LM40D-6 does not latch contacts 25–26 open when the rope is pulled. The contacts close when the rope is released. When using model RP-LM40D-6, a latch circuit must be included in the machine control circuitry.

Specifications

Contact Rating
10 A at 24 V AC
10 A at 110 V AC
6 A at 230 V AC
6 A at 24 V DC
2.5 kV maximum transient tolerance
NEMA A300 (same polarity)

European Rating
Utilization Category: AC-15, U_e/I_e 240 V/3 A
Rated Insulation Voltage (U_i): 400 V AC
Conv. Thermal Current (I_{the}): 10 A
Rated operational Voltage (U_e): 240 V

Contact Material
Silver-nickel allow

Maximum Switching Speed
50 operations per minute

Recommended Rope Size
2 mm diameter steel rope

Maximum Rope Pull Length
6 m (20 ft)

Short Circuit Protection
10 amp gG Fuse
Recommended external fusing or overload protection

Mechanical Life
1 million operations

Wire Connections
Screw terminals with pressure plates accept the following wire sizes –
Stranded and solid: 20 AWG (0.5 mm^2) to 16 AWG (1.5 mm^2) for one wire

Cable Entry
M20 x 1.5 threaded entrance. Adapter supplied to convert M20 x 1.5 to ½"-14 NPT threaded entrance

B10d
2 × 10^6 cycles at DC-13; 24 V; I_{e2} = 0.2 A based on ISO 13849-1

Construction
Body: Aluminum allow die-cast
Cover: Aluminum allow plate
Pull Ring: Zinc allow die-cast

Environmental Rating
IP65

Operating Conditions
Temperature: –30 °C to +80 °C (–22 °F to +176 °F)

Weight
RP-LM40D-6: 0.22 Kg (0.49 lbs)
RP-LM40D-6L: 0.26 Kg (0.57 lbs)

Required Overcurrent Protection

WARNING: Electrical connections must be made by qualified personnel in accordance with local and national electrical codes and regulations.

Overcurrent protection is required to be provided by end product application per the supplied table.
Overcurrent protection may be provided with external fusing or via Current Limiting, Class 2 Power Supply.
Supply wiring leads < 24 AWG shall not be spliced.
For additional product support, go to www.bannerengineering.com.

Supply Wiring (AWG)	Required Overcurrent Protection (Amps)
20	5.0
22	3.0
24	2.0
26	1.0
28	0.8
30	0.5

Certifications

Banner Engineering Europe Park Lane, Culliganlaan 2F bus 3, 1831 Diegem, BELGIUM

Turck Banner LTD Blenheim House, Blenheim Court, Wickford, Essex SS11 8YT, Great Britain

Dimensions

Figure 6. Model RP-LM40D-6

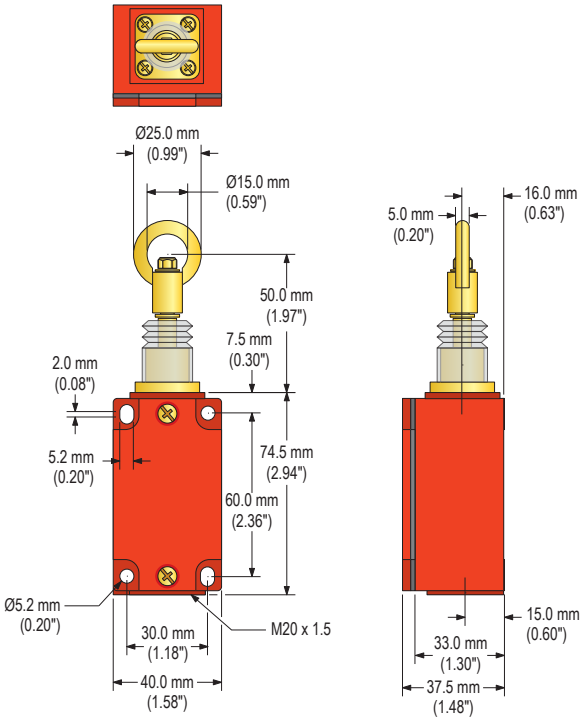

Figure 7. Model RP-LM40D-6L

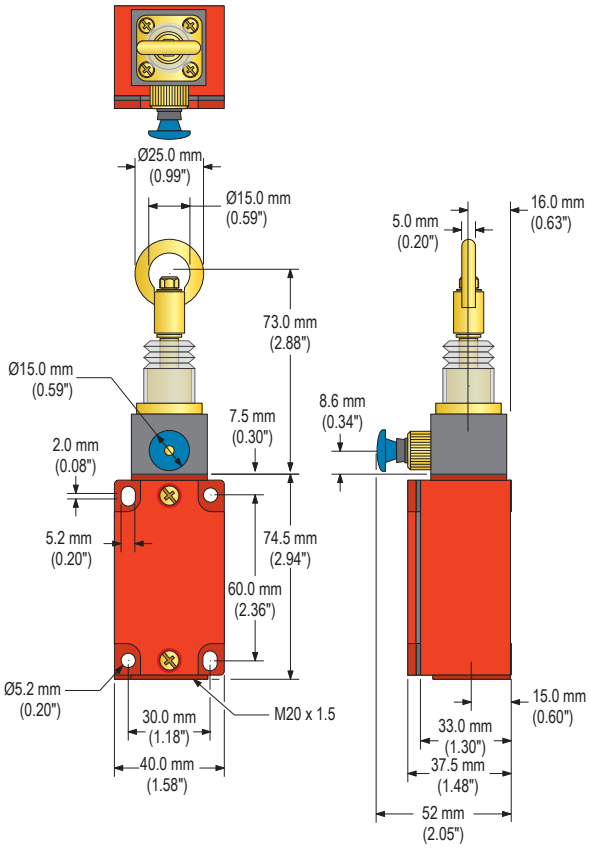

Accessories

Cable Glands

Model	Size	For Cable Diameter	Dimensions	Used With
SI-QM-CGM20	M20 × 1.5 Metal	5.0 to 12.0 mm (0.20 to 0.47 inches)	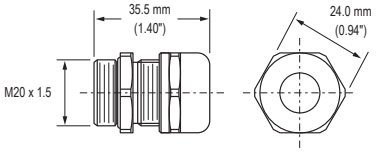	RP-RM83 Rope Pull Switch RP-LM40 Rope Pull Switch RP-QM72/QMT72 Rope Pull Switch RP-QM90 Rope Pull Switch SI-LM40 Safety Interlock Switch

Conduit Adapters

Model	Size	Thread Conversion	Dimensions	Used With
SI-QM-M20	½ in-14 NPT Metal	M20 × 1.5 to ½ in-14 NPT	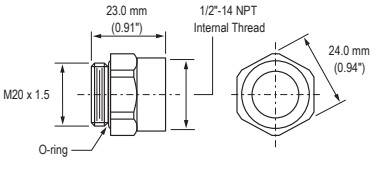	SI-LM40 Safety Interlock Switches RP-LM40 Rope Pull Switches RP-QM72/QMT72 Rope Pull Switches RP-QM90 Rope Pull Switches RP-RM83 Rope Pull Switches

One conduit adapter is supplied with each switch.

Components for the Wire Rope Assembly

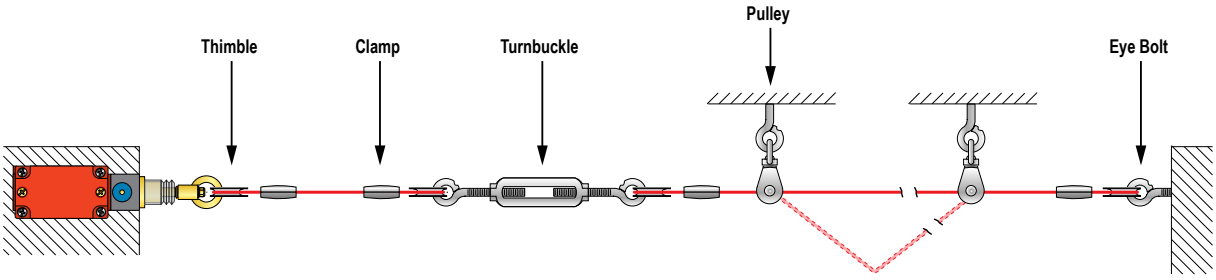

Model	Length	Description	Wire Rope
RPA-C1-10	10 m (32.8 ft)	2 mm steel wire rope with 0.5 mm red PVC jacket (unterminated)	
RPA-C1-20	20 m (65.6 ft)		
RPA-C1-100	100 m (328.1 ft)		

Model	Quantity	Description	Thimble
RPA-T1-4	4	Thimble for 2 mm wire rope	

Model	Quantity		Clamp
RPA-CC1-4	4	Clamp for 2 mm wire rope	

Model	Quantity	Description	Turnbuckle
RPA-TA1-1	1	#4 Turnbuckle	

Model	Quantity	Description	Eye Bolt
RPA-EB1-1	1	¼ in -20 Eye bolt (3 in bolt shaft)	

Model	Quantity	Description	Pulley
RPA-P1-1	1	Hanging pulley for in-line use	
RPA-DP1-1	1	Right-angle mount deflection pulley for corner turns (90° to 180°)	

Model	Quantity	Description	Tensioning Spring	Used With
RPA-S1-1	1	Tensioning spring #1		RP-QM72 and RP-QM90 cable runs less than 10 m
RPA-S2-1	1	Tensioning spring #2		RP-QM72, RP-QMT72, and RP-QM90 cable runs over 10 m
RPAK-C2SBP-1	1	Spring breakage protector cable kit		Makes 300 mm spring breakage protector cable

Note: Hardware kits are available that contain the required hardware (except the spring) for a given cable run length. To find these kits, go to www.bannerengineering.com and search for "RPAK".

Product Support and Maintenance

Maintenance/Checkout

At switch installation or replacement and at machine set up, a Designated Person [1] must test each switch for proper machine shutdown response and check the switch(es) and installation for proper operation, physical damage, mounting (looseness), and excessive environmental contamination. This must also take place on a periodic schedule determined by the user, based on the severity of the operating environment and the frequency of switch actuations. This is generally determined by a risk assessment, such as the one contained in ANSI B11.0. Adjust, repair, or replace components as needed. If inspection reveals contamination on the switch, thoroughly clean the switch and eliminate the cause of the contamination. Replace the switch and/or appropriate components when any parts or assemblies are damaged, broken, deformed, or badly worn; or if the electrical/mechanical specifications (for the environment and operating conditions) have been exceeded. Always test the control system for proper functioning under machine control conditions after performing maintenance, replacing the switch, or replacing any component of the switch.

Additional items that should be included in the checkout and/or regularly scheduled maintenance of a rope pull system:

- Check for proper rope tension and adjust as needed
- Verify free operation (no binding) of the rope and proper tripping when the rope is pulled
- Periodically lubricate the pulleys and other moving parts associated with the rope
- Repair any loose or damaged hardware, worn/frayed rope (cable), missing red rope sheathing or flags/markers (if used)
- Remove or clean off any contamination and eliminate its cause

Repairs

Contact Banner Engineering for troubleshooting of this device. **Do not attempt any repairs to this Banner device; it contains no field-replaceable parts or components.** If the device, device part, or device component is determined to be defective by a Banner Applications Engineer, they will advise you of Banner's RMA (Return Merchandise Authorization) procedure.

Important: If instructed to return the device, pack it with care. Damage that occurs in return shipping is not covered by warranty.

EU/UK Declaration of Conformity (DoC)

Banner Engineering Corp. herewith declares that these products are in conformity with the provisions of the listed directives, regulations, and all essential health and safety requirements have been met. For the complete DoC, please go to www.bannerengineering.com.

Product	Directive
RP-LM40 Series Rope Pull Switch	EU: Low Voltage Directive 2014/35/EU
	UK: Electrical Equipment (Safety) Regulations 2016

Representative in EU: Spiridon Lachanidis, Managing Director, **Banner Engineering Europe** Park Lane, Culliganlaan 2F bus 3, 1831 Diegem, BELGIUM

Representative in UK: Tony Coghlan, Managing Director, **Turck Banner LTD** Blenheim House, Blenheim Court, Wickford, Essex SS11 8YT, Great Britain

Banner Engineering Corp. Limited Warranty

Banner Engineering Corp. warrants its products to be free from defects in material and workmanship for one year following the date of shipment. Banner Engineering Corp. will repair or replace, free of charge, any product of its manufacture which, at the time it is returned to the factory, is found to have been defective during the warranty period. This warranty does not cover damage or liability for misuse, abuse, or the improper application or installation of the Banner product.

THIS LIMITED WARRANTY IS EXCLUSIVE AND IN LIEU OF ALL OTHER WARRANTIES WHETHER EXPRESS OR IMPLIED (INCLUDING, WITHOUT LIMITATION, ANY WARRANTY OF MERCHANTABILITY OR FITNESS FOR A PARTICULAR PURPOSE), AND WHETHER ARISING UNDER COURSE OF PERFORMANCE, COURSE OF DEALING OR TRADE USAGE.

This Warranty is exclusive and limited to repair or, at the discretion of Banner Engineering Corp., replacement. **IN NO EVENT SHALL BANNER ENGINEERING CORP. BE LIABLE TO BUYER OR ANY OTHER PERSON OR ENTITY FOR ANY EXTRA COSTS, EXPENSES, LOSSES, LOSS OF PROFITS, OR ANY INCIDENTAL, CONSEQUENTIAL OR SPECIAL DAMAGES RESULTING FROM ANY PRODUCT DEFECT OR FROM THE USE OR INABILITY TO USE THE PRODUCT, WHETHER ARISING IN CONTRACT OR WARRANTY, STATUTE, TORT, STRICT LIABILITY, NEGLIGENCE, OR OTHERWISE.**

Banner Engineering Corp. reserves the right to change, modify or improve the design of the product without assuming any obligations or liabilities relating to any product previously manufactured by Banner Engineering Corp. Any misuse, abuse, or improper application or installation of this product or use of the product for personal protection applications when the product is identified as not intended for such purposes will void the product warranty. Any modifications to this product without prior express approval by Banner Engineering Corp will void the product warranties. All specifications published in this document are subject to change; Banner reserves the right to modify product specifications or update documentation at any time. Specifications and product information in English supersede that which is provided in any other language. For the most recent version of any documentation, refer to: www.bannerengineering.com.

For patent information, see www.bannerengineering.com/patents.

[1] A Designated Person is identified in writing by the employer as being appropriately trained to perform a specified checkout procedure.

© Banner Engineering Corp. All rights reserved