Performance PB1 Node Board Module

Features

Sure Cross® Performance embeddable board modules provide connectivity where traditional wired connections are not possible or are cost-prohibitive. Wireless networks are formed around a Gateway, which acts as the wireless network client device, and one or more Nodes. Sure Cross Performance embeddable board modules communicate with all Sure Cross Performance radios.



- Wireless industrial I/O device with two sinking discrete inputs, two NMOS discrete outputs, two 0 to 20 mA analog inputs, and two switch power outputs
- Selectable transmit power levels of 250 mW or 1 W for 900 MHz models and 65 mW for 2.4 GHz models
- *Flex*Power® power options allow for 10 V DC to 30 V DC, solar, and battery power sources for low-power applications.
- DIP switches for user configuration
- Frequency Hopping Spread Spectrum (FHSS) technology ensures reliable data delivery
- Transceivers provide bidirectional communication between the Gateway and Node, including fully acknowledged data transmission

Models

Models	Frequency	Inputs and Outputs
DX80N9X2S-PB1	900 MHz ISM Band	Inputs: Two NPN discrete. two 0–20 mA analog Outputs: Two NMOS discrete Switch Power: Two

The following models are no longer available for order, but are still covered by the information in this document.

Models	Frequency	Inputs and Outputs
DX80N2X2S-PB1	2.4 GHz ISM Band	Inputs: Two NPN discrete. two 0–20 mA analog Outputs: Two NMOS discrete Switch Power: Two

Configuration Instructions

Setting Up Your Wireless Network

To set up and install your wireless network, follow these steps.

For complete instructions, including binding, configuration, installation, weatherproofing, device menu maps, troubleshooting, and a list of accessories, refer to Sure Cross® Wireless I/O Network Instruction Manual (p/n 132607)

1. Disconnect the power from your Sure Cross® devices.
2. Configure the DIP switches of all devices. DIP switch configurations are always listed in the product's datasheet.
3. If your device has I/O, connect the sensors to the Sure Cross devices. Available I/O is always listed in the product's datasheet. If your device does not have I/O, skip this step.
4. Refer to the wiring diagrams to apply power to all devices.
    - For housed models, the Gateway's LED 1 is solid green and the Node's LED 2 flashes red to indicate there is no radio link to the Gateway.
    - For board-level models, the Gateway's LED is solid green and the Node's LED flashes red to indicate there is no radio link to the Gateway.
5. Form the wireless network by binding the Nodes to the Gateway.
6. Observe the LED behavior to verify the devices are communicating with each other.
    - For housed models, the Gateway's LED 1 is solid green and the Node's LED 1 flashes green to indicate it is communicating with the Gateway.
    - For board-level models, the Gateway's LED is solid green and the Node's LED flashes green to indicate it is communicating with the Gateway.
7. Configure any I/O points to use the sensors connected to the Sure Cross devices.
8. Conduct a site survey between the Gateway and Nodes.
9. Install your wireless sensor network components.

Original Instructions
26-Feb-25

© Banner Engineering Corp. All rights reserved.
www.bannerengineering.com

163210
p/n: 163210 Rev. M

ПРОМЭЛЕКТРОНИКА/ sales@prom-elec.com

Configure the DIP Switches

Before changing DIP switch positions, disconnect the power.[1]

Any changes made to the DIP switches are not recognized until after power is cycled to the device. For parameters not set using the DIP switches, use the configuration software to make configuration changes. For parameters set using the DIP switches, the DIP switch positions override any changes made using the configuration software.

DIP Switch Settings

	Switches							
Device Settings	**1**	**2**	**3**	**4**	**5**	**6**	**7**	**8**
Transmit power level (900 MHz): 1 W (30 dBm) (default setting)	OFF							
Transmit power level (900 MHz): 250 mW (24 dBm) DX80 compatibility mode	ON							
Modbus or software configured (overrides DIP switches 3-8) (default setting)		OFF						
DIP switch configured		ON						
Link loss output: OFF or 0 mA (default setting)				OFF	OFF			
Link loss output: ON or 20 mA				OFF	ON			
Link loss output: hold last state				ON	OFF			
Reserved				ON	ON			
0–20 mA scale (Not used for 0–10 V analog I/O models) (default setting)						OFF		
4–20 mA scale (Not used for 0–10 V analog I/O models)						ON		

* Default configuration

Transmit Power Level. The 900 MHz radios transmit at 1 Watt (30 dBm) or 250 mW (24 dBm). The lower power 250 mW mode reduces the radio's range but improves the battery life in short-range applications. For 2.4 GHz models, this DIP switch is disabled. The transmit power for 2.4 GHz is fixed at about 65 mW EIRP (18 dBm).

Analog Input and Output Scale. Use the DIP switch to select which current scale to use for all the device's analog inputs and outputs: 0-20 mA or 4-20 mA. When using a 4-20 mA sensor with a 0-20 mA input, the sensor uses the 4-20 mA section of the total range. Using a 4-20 mA with a 0-20 mA input allows you to determine when you have an error condition with the sensor. A normal input reading between 4 and 20 mA indicates a functioning sensor whereas a value below 4 mA indicates an error condition, such as a broken wire or loose connection. This DIP switch is used only on the 0-20 mA models, not the 0-10V models.

Link Loss Outputs. The Sure Cross® wireless devices use a deterministic radio link time-out method to address RF link interruption or failure. When a radio link fails, all pertinent wired outputs are set to defined states until the link is recovered, ensuring that disruptions in the communications link result in predictable system behavior. Following a radio link time-out, all outputs linked to the Node in question are set to de-energize (discrete outputs to zero, analog outputs to 0 mA or 4 mA), energize (discrete outputs to one, analog outputs to 20 mA), or hold the last stable state/value. Use the DIP switches to select the link loss output state.

Modbus or Software Configured. In Modbus/Software Configured mode, use the DX80 Performance Configuration Software or a Modbus command to change the device parameters. DIP switch positions 3 through 8 are ignored. In DIP Switch Configured mode, use the DIP switches to configure the parameters listed in the table.

PB1 Wiring Diagrams

Discrete Input Wiring for NPN Sensors	Discrete Output Wiring (NPN or NMOS)	Analog Input Wiring
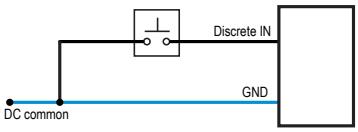	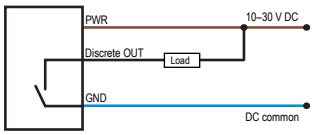	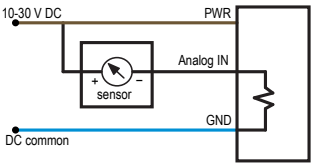

[1] For devices powered by batteries integrated into the housing, triple-click button 2, then double-click button 2 to reset the device without removing the battery.

© Banner Engineering Corp. All rights reserved.
www.bannerengineering.com

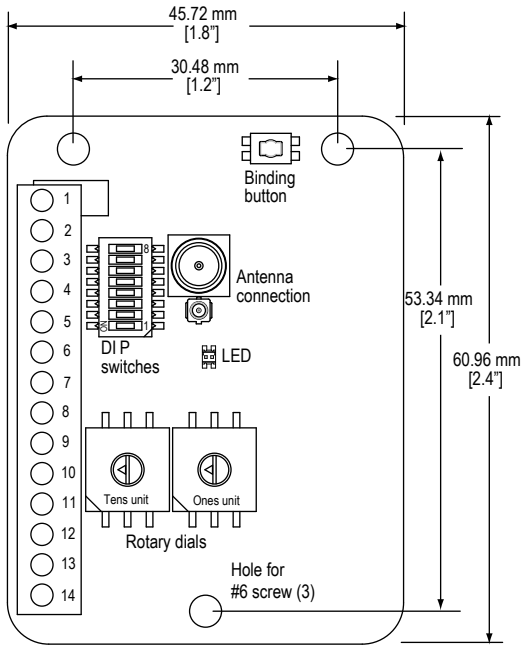

Pin	Description	Label
1	Analog IN 1 (0 to 20 mA)	AI1
2	Analog IN 2 (0 to 20 mA)	AI2
3	Discrete IN 3 (NPN)	DI3
4	Discrete IN 4 (NPN)	DI4
5	Ground	GND
6	Switch Power 1 (see Switch Power output register definition)	SP1
7	Switch Power 2 (see Switch Power output register definition)	SP2
8	Discrete OUT 3	DO3
9	Discrete OUT 4	DO4
10	Not used	-
11	Not used	-
12	Ground	GND
13	10 to 30 V DC	PWR
14	3.3 to 5.5 V DC low power connection	3V

Bind Radios to Form Networks

Binding Nodes to a Gateway ensures the Nodes only exchange data with the Gateway they are bound to. For a more detailed definition of binding mode, refer to the *Advanced Setup* section of the *Sure Cross Wireless I/O Networks* instruction manual (p/n 132607).

Apply power to the Gateway and Nodes.

1. Enter binding mode on the Gateway.
    - If you have a two-button Gateway, triple-click button 2
    - If you have a one-button Gateway, triple-click the button
    - If you have a Gateway with no buttons, remove the rotary dial access cover and set both the right and left rotary dials to 0, then set both the right and left rotary dials to F.
    - If you have a DXM, under the **ISM Radio** menu, use the down arrow button to highlight the **Binding** menu. Click **ENTER**.

Two-button Gateway



One-button Gateway



The LEDs flash alternately when the Gateway is in binding mode. Any Node entering binding mode will bind to this Gateway.

2. Use the Node's rotary dials to assign a valid decimal Node Address (between 01 and 47). The left rotary dial represents the tens digit (0 through 4) and the right dial represents the ones digit (0 through 9) of the Node Address.
3. Enter binding mode on the Node.
    - If you have a two-button Node, triple-click button 2.
    - If you have a one-button Node, triple-click the button.
    - If you have a Node with no buttons, remove the top cover and set both the left and right rotary dials to F to enter binding mode. [(2)]

The Node enters binding mode and locates the Gateway in binding mode.

[(2)] Some older M-GAGE Nodes (models DX80N*X1W0P0ZR) may require F-F binding despite having a single button. Refer to the Node's datasheet for specific information.

© Banner Engineering Corp. All rights reserved.
www.bannerengineering.com

For two LED models, the red LEDs flash alternately. After binding is complete, both LEDs are both solid red for a few seconds.

For one-LED models, the red and green LED flashes alternately while the Node searches for the Gateway. After binding is complete, the LED is red and green for four seconds (looks amber), then the red and green flash simultaneously (looks amber) four times.

The Node automatically exits binding mode, cycles its power, and then enters RUN mode.

4. For DXM models, click **BACK** to exit binding for that specific Node address.
5. Repeat steps 2 through 4 for all Nodes that will communicate to this Gateway.
6. Exit binding mode on the Gateway.
    - If you have a two-button Gateway, single-click either button.
    - If you have a one-button Gateway, single-click the button.
    - If you have a Gateway with no buttons, change the Gateway's rotary dials to a valid Network ID.
    - If you have a DXM, click **BACK** until you return to the main menu.

When installing special kits with pre-mapped I/O, indicated by device model numbers beginning in DX80K, return the rotary dials to their original positions after binding. If the rotary dials are not returned to their original positions, the I/O mapping will not work.

After the binding process is complete, data begins transmitting to the Gateway.

LED Behavior for the Gateways and Nodes

Verify all devices are communicating properly. Nodes do not sample inputs until they are communicating with the Gateway. The radios and antennas must be a minimum distance apart to function properly. Recommended minimum distances are:

900 MHz radios transmitting at ≤ 250 mW: 6 feet
900 MHz radios transmitting at ≥ 500 mW: 15 feet
2.4 GHz radios (transmitting at 65 mW): 1 foot

LED behavior

Devices with Two LEDs		Devices with One LED	Gateway Status	Node Status
LED 1	LED 2			
Green		Green	Power is on	N/A
Flashing green			N/A	Radio link is okay
Flashing red	Flashing red	Flashing red	Device error	Device error
	Flashing amber	Green and red flash (amber) together	Modbus communication active	N/A
	Flashing red	Flashing red	Modbus communication error	No radio link (flashes once every 3 s)
Flashing red (alternately)	Flashing red (alternately)	Green and red flash alternately	Device is in binding mode	Device is in binding mode
		Red	Gateway is trying to conduct a Site Survey with a Node that doesn't exist	
		Green and red solid (amber) together	No radio communication detected	
Red (for 4 seconds)	Red (for 4 seconds)	Green/red solid (amber) for 4 seconds, then flash 4 times		Binding mode is complete

For Gateway systems, the Modbus communication LEDs refer to the communication between the Gateway and its host system (if applicable).

© Banner Engineering Corp. All rights reserved.
www.bannerengineering.com

DX80 Performance Configuration Software

The configuration software offers an easy way to link I/O points in your wireless network, view I/O register values, and set system communication parameters when a host system is not part of the wireless network. The software runs on any computer with the Windows Vista, Windows 7, Windows 8, or Windows 10 operating system.

Device Configuration screen

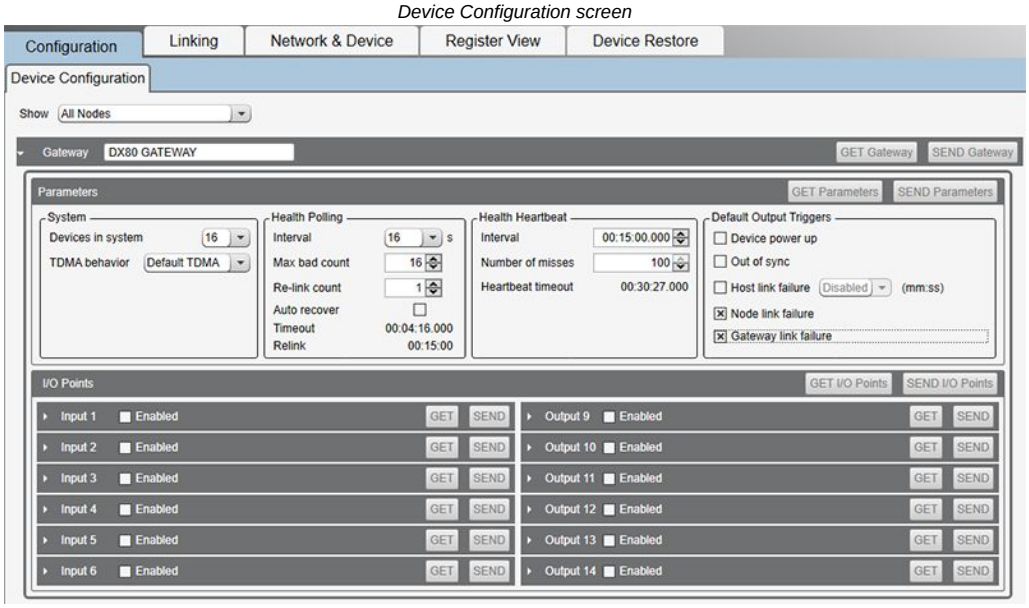

Use a USB to RS-485 adapter cable to connect a standalone DX80 Gateway to the computer. For DXM Controllers with an internal DX80 radio, connect a computer to the DXM Controller using the supplied USB or Ethernet connection. Download the most recent revisions of the configuration software from Banner Engineering's website: https://www.bannerengineering.com/us/en/products/wireless-sensor-networks/reference-library/software.html.

The USB to RS-485 adapter cable is not required for the DXM Controller. For standalone DX80 Gateway devices use:

- USB to RS-485 adapter cable model **BWA-UCT-900** for 1 Watt radios
- USB to RS-485 adapter cable model **BWA-HW-006** for all other radios

Mixing Performance and Non-Performance (150 mW) Radios in the Same Network

To comply with federal regulations, the 150 mW radios and 500 mW radios communicate differently. All Performance models offer the ability to select between 250 mW and 500 mW operation using the DIP switches.

To mix Performance radios with non-Performance radios, refer to the product datasheet and:

- Operate Performance radios in 250 mW mode, not 500 mW mode
- Set non-Performance (150 mW) radios to use Extended Address Mode

The 150 mW, 250 mW, 500 mW, and 1 W networks operate when collocated, but verify the antenna separation distance between a Gateway and Node or between two Gateways is at least 10 feet apart. For more detailed instructions about setting up your wireless network, refer to the following documents:

- DX80 Performance Quick Start Guide (p/n 128185)
- DX80 Performance Wireless I/O Network Instruction Manual (p/n 132607)
- DXM Quick Start Guide (p/n 191247)
- DXM Instruction Manuals (DXM100-Bx: 190037 and DXM150-Bx: 190038)

Installing the Board Modules

Sure Cross® board modules must be mounted inside a panel or OEM enclosure.

PB1 Holding Registers

Modbus Registers		EIP Registers		I/O Type	I/O Range		Holding Register Representation (Dec)	
Gateway	Node	Node			Min.	Max.	Min.	Max.
1	1 + (Node# × 16)	0 + (Node# × 8)	Instance 100 / N7	Discrete IN 3	0	1	0	1

Continued on page 6

© Banner Engineering Corp. All rights reserved.
www.bannerengineering.com

Continued from page 5

Modbus Registers		EIP Registers		I/O Type	I/O Range		Holding Register Representation (Dec)	
Gateway	Node	Node			Min.	Max.	Min.	Max.
2	2 + (Node# × 16)	1 + (Node# × 8)		Discrete IN 4	0	1	0	1
3	3 + (Node# × 16)	2 + (Node# × 8)		Analog IN 1 (mA)	0.0	20.0	0	65535
4	4 + (Node# × 16)	3 + (Node# × 8)		Analog IN 2 (mA)	0.0	20.0	0	65535
	...							
7	7 + (Node# × 16)	6 + (Node# × 8)		Reserved				
8	8 + (Node# × 16)	7 + (Node# × 8)		Device Message				
9	9 + (Node# × 16)	0 + (Node# × 8)	Instance 112 / N14	Discrete OUT 3	0	1	0	1
10	10 + (Node# × 16)	1 + (Node# × 8)		Discrete OUT 4	0	1	0	1
	...							
15	15 + (Node# × 16)	6 + (Node# × 8)		Control Message				
16	16 + (Node# × 16)	7 + (Node# × 8)		Reserved				

Specifications

Radio Range

A 2 dB antenna ships with this device.

Transmit power and range are subject to many factors, including antenna gain, installation methods, characteristics of the application, and environmental conditions.

Please refer to the following documents for installation instructions and high-gain antenna options.

Installing Your Sure Cross® Radios (151514)
Conducting a Site Survey (133602)
Sure Cross® Antenna Basics (132113)

Radio Transmit Power (900 MHz, 1 W radios)

Conducted: 30 dBm (1 W)

EIRP with the supplied antenna: < 36 dBm

Radio Transmit Power (2.4 GHz radios)

Conducted: < 18 dBm (65 mW)

EIRP with the supplied antenna: < 20 dBm (100 mW)

Antenna Minimum Separation Distance

900 MHz radios transmitting at ≤ 250 mW: 2 m (6 ft) with the supplied antenna

900 MHz radios transmitting at ≥ 500 mW: 4.57 m (15 ft) with the supplied antenna

2.4 GHz radios transmitting at 65 mW: 0.3 m (1 ft) with the supplied antenna

Spread Spectrum Technology

FHSS (Frequency Hopping Spread Spectrum)

900 MHz Compliance (RM1809 Radio Module)

Radio module is indicated by the product label marking

Contains FCC ID: UE3RM1809

Contains IC: 7044A-RM1809

IFT: RCPBARM13-2283

2.4 GHz Compliance (SX243 Radio Module)

Radio module is indicated by the product label marking

Contains FCC ID: UE3SX243

Radio Equipment Directive (RED) 2014/53/EU

Contains IC: 7044A-SX243

2.4 GHz Compliance (DX80-2400 Radio Module)

Radio module is indicated by the product label marking

Contains FCC ID: UE300DX80-2400

Radio Equipment Directive (RED) 2014/53/EU

Contains IC: 7044A-DX8024

Antenna Connection

Ext. Reverse Polarity SMA, 50 Ohms

Max Tightening Torque: 0.45 N·m (4 lbf·in)

Supply Voltage

10 V DC to 30 V DC or 3.6 V DC to 5.5 V DC low power option (Outside the USA: 12 V DC to 24 V DC, ± 10%)[3]

Current Draw at 24 V DC

Approximately 4 mA

Current Draw at 3.6 V DC

900 MHz, 1 W: Approximately 1 mA

900 MHz, 250 mW: Approximately 0.5 mA

2.4 GHz, 65 mW: Approximately 0.3 mA

Interface

One bi-color LED indicator, One button

Wiring Access

Terminal block

Operating Conditions

–40 °C to +85 °C (–40 °F to +185 °F)

95% maximum relative humidity (non-condensing)

Operating the devices at the maximum operating conditions for extended periods can shorten the life of the device.

Switch Power Outputs

Two

Discrete Input

Rating: 3 mA max current at 30 V DC

Sample Rate: 62.5 milliseconds

Report Rate: On change of state

ON Condition (NPN): Less than 0.7 V

OFF Condition (NPN): Greater than 2 V or open

Analog Inputs

Rating: 24 mA

Impedance: Approximately 100 Ohms[4]

Sample Rate: 1 second

Report Rate: 16 seconds or On Change of State (1% change in value)

Accuracy: 0.1% of full scale +0.01% per °C

Resolution: 12-bit

[3] For European applications, power this device from a Limited Power Source as defined in EN 60950-1.

[4] To verify the analog input's impedance, use an Ohm meter to measure the resistance between the analog input terminal (AI*x*) and the ground (GND) terminal.

© Banner Engineering Corp. All rights reserved.
www.bannerengineering.com

Discrete Output Rating (NMOS)

Less than 10 mA max current at 30 V DC
ON-State Saturation: Less than 0.7 V at 20 mA

Discrete Output

Update Rate: 1 second
ON Condition: Less than 0.7 V
OFF Condition: Open
Output State Following Timeout: De-energized (OFF)

Certifications

Banner Engineering BV
Park Lane, Culliganlaan 2F bus 3
1831 Diegem, BELGIUM

Turck Banner LTD Blenheim House
Blenheim Court
Wickford, Essex SS11 8YT
GREAT BRITAIN

CE/UKCA approval only applies to 2.4 GHz models

FCC Part 15 Class A for Intentional Radiators

This equipment has been tested and found to comply with the limits for a Class A digital device, pursuant to Part 15 of the FCC Rules. These limits are designed to provide reasonable protection against harmful interference when the equipment is operated in a commercial environment. This equipment generates, uses, and can radiate radio frequency energy and, if not installed and used in accordance with the instruction manual, may cause harmful interference to radio communications. Operation of this equipment in a residential area is likely to cause harmful interference in which case the user will be required to correct the interference at his own expense.

(Part 15.21) Any changes or modifications not expressly approved by the party responsible for compliance could void the user's authority to operate this equipment.

Industry Canada Statement for Intentional Radiators

This device contains licence-exempt transmitters(s)/receiver(s) that comply with Innovation, Science and Economic Development Canada's licence-exempt RSS(s). Operation is subject to the following two conditions:

1. This device may not cause interference.
2. This device must accept any interference, including interference that may cause undesired operation of the device.

Cet appareil contient des émetteurs/récepteurs exemptés de licence conformes à la norme Innovation, Sciences, et Développement économique Canada. L'exploitation est autorisée aux deux conditions suivantes:

1. L'appareil ne doit pas produire de brouillage.
2. L'utilisateur de l'appareil doit accepter tout brouillage radioélectrique subi, même si le brouillage est susceptible d'en compromettre le fonctionnement.

MultiHop M-HBx and Performance PBx Models Mounted on the Base

Most MultiHop M-HBx and Performance PBx models ship from the factory mounted on a plastic base.

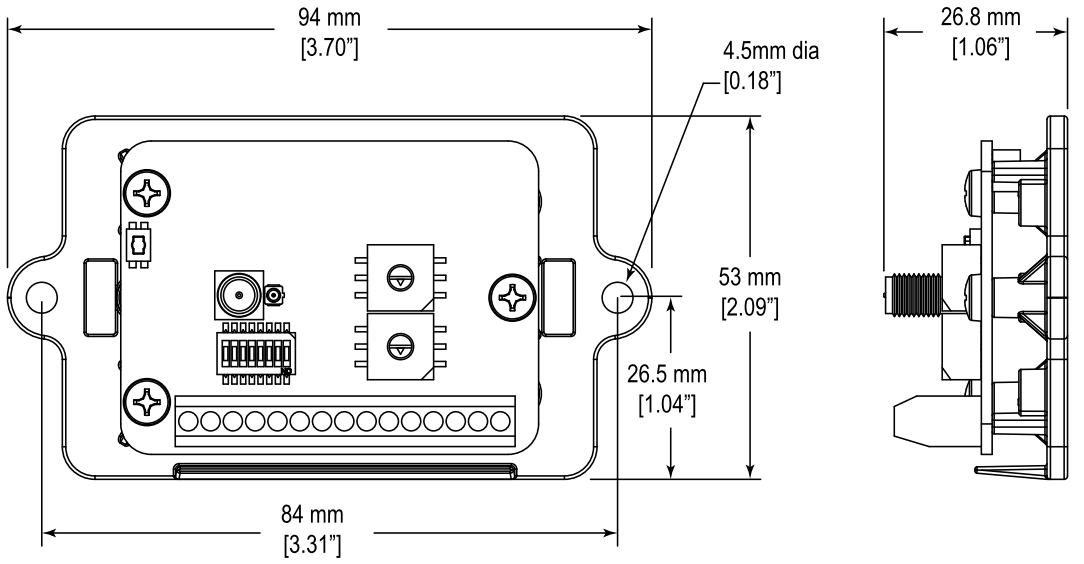

Accessories for the Board Models

BWA-HW-034

- DIN rail clip, black plastic



© Banner Engineering Corp. All rights reserved.
www.bannerengineering.com

Warnings

WARNING:
- **Do not use this device for personnel protection**
- Using this device for personnel protection could result in serious injury or death.
- This device does not include the self-checking redundant circuitry necessary to allow its use in personnel safety applications. A device failure or malfunction can cause either an energized (on) or de-energized (off) output condition.

IMPORTANT: Please download the complete Performance PB1 Node Board Module technical documentation, available in multiple languages, from www.bannerengineering.com for details on the proper use, applications, Warnings, and installation instructions of this device.

IMPORTANT: Por favor descargue desde www.bannerengineering.com toda la documentación técnica de los Performance PB1 Node Board Module, disponibles en múltiples idiomas, para detalles del uso adecuado, aplicaciones, advertencias, y las instrucciones de instalación de estos dispositivos.

IMPORTANT: Veuillez télécharger la documentation technique complète des Performance PB1 Node Board Module sur notre site www.bannerengineering.com pour les détails sur leur utilisation correcte, les applications, les notes de sécurité et les instructions de montage.

Install and properly ground a qualified surge suppressor when installing a remote antenna system. Remote antenna configurations installed without surge suppressors invalidate the manufacturer's warranty. Keep the ground wire as short as possible and make all ground connections to a single-point ground system to ensure no ground loops are created. No surge suppressor can absorb all lightning strikes; do not touch the Sure Cross® device or any equipment connected to the Sure Cross® device during a thunderstorm.

Exporting Sure Cross® Radios. It is our intent to fully comply with all national and regional regulations regarding radio frequency emissions. **Customers who want to re-export this product to a country other than that to which it was sold must ensure the device is approved in the destination country.** The Sure Cross wireless products were certified for use in these countries using the antenna that ships with the product. When using other antennas, verify you are not exceeding the transmit power levels allowed by local governing agencies. This device has been designed to operate with the antennas listed on Banner Engineering's website and having a maximum gain of 9 dBm. Antennas not included in this list or having a gain greater than 9 dBm are strictly prohibited for use with this device. The required antenna impedance is 50 ohms. To reduce potential radio interference to other users, the antenna type and its gain should be so chosen such that the equivalent isotropically radiated power (EIRP) is not more than that permitted for successful communication. Consult with Banner Engineering Corp. if the destination country is not on this list.

IMPORTANT:
- **Never operate a radio without connecting an antenna**
- Operating radios without an antenna connected will damage the radio circuitry.
- To avoid damaging the radio circuitry, never apply power to a Sure Cross® Performance or Sure Cross® MultiHop radio without an antenna connected.

IMPORTANT:
- **Electrostatic discharge (ESD) sensitive device**
- ESD can damage the device. Damage from inappropriate handling is not covered by warranty.
- Use proper handling procedures to prevent ESD damage. Proper handling procedures include leaving devices in their anti-static packaging until ready for use; wearing anti-static wrist straps; and assembling units on a grounded, static-dissipative surface.

Banner Engineering Corp Limited Warranty

Banner Engineering Corp. warrants its products to be free from defects in material and workmanship for one year following the date of shipment. Banner Engineering Corp. will repair or replace, free of charge, any product of its manufacture which, at the time it is returned to the factory, is found to have been defective during the warranty period. This warranty does not cover damage or liability for misuse, abuse, or the improper application or installation of the Banner product.

THIS LIMITED WARRANTY IS EXCLUSIVE AND IN LIEU OF ALL OTHER WARRANTIES WHETHER EXPRESS OR IMPLIED (INCLUDING, WITHOUT LIMITATION, ANY WARRANTY OF MERCHANTABILITY OR FITNESS FOR A PARTICULAR PURPOSE), AND WHETHER ARISING UNDER COURSE OF PERFORMANCE, COURSE OF DEALING OR TRADE USAGE.

This Warranty is exclusive and limited to repair or, at the discretion of Banner Engineering Corp., replacement. **IN NO EVENT SHALL BANNER ENGINEERING CORP. BE LIABLE TO BUYER OR ANY OTHER PERSON OR ENTITY FOR ANY EXTRA COSTS, EXPENSES, LOSSES, LOSS OF PROFITS, OR ANY INCIDENTAL, CONSEQUENTIAL OR SPECIAL DAMAGES RESULTING FROM ANY PRODUCT DEFECT OR FROM THE USE OR INABILITY TO USE THE PRODUCT, WHETHER ARISING IN CONTRACT OR WARRANTY, STATUTE, TORT, STRICT LIABILITY, NEGLIGENCE, OR OTHERWISE.**

Banner Engineering Corp. reserves the right to change, modify or improve the design of the product without assuming any obligations or liabilities relating to any product previously manufactured by Banner Engineering Corp. Any misuse, abuse, or improper application or installation of this product or use of the product for personal protection applications when the product is identified as not intended for such purposes will void the product warranty. Any modifications to this product without prior express approval by Banner Engineering Corp will void the product warranties. All specifications published in this document are subject to change; Banner reserves the right to modify product specifications or update documentation at any time. Specifications and product information in English supersede that which is provided in any other language. For the most recent version of any documentation, refer to: www.bannerengineering.com.

For patent information, see www.bannerengineering.com/patents.

Notas Adicionales (con Antena)

Información México: La operación de este equipo está sujeta a las siguientes dos condiciones: 1) es posible que este equipo o dispositivo no cause interferencia perjudicial y 2) este equipo debe aceptar cualquier interferencia, incluyendo la que pueda causar su operación no deseada.

Banner es una marca registrada de Banner Engineering Corp. y podrán ser utilizadas de manera indistinta para referirse al fabricante. "Este equipo ha sido diseñado para operar con las antenas tipo Omnidireccional para una ganancia máxima de antena de 6 dBd y Yagi para una ganancia máxima de antena 10 dBd que en seguida se enlistan. También se incluyen aquellas con aprobación ATEX tipo Omnidireccional siempre que no excedan una ganancia máxima de antena de 6dBd. El uso con este equipo de antenas no incluidas en esta lista o que tengan una ganancia mayor que 6 dBd en tipo omnidireccional y 10 dBd en tipo Yagi, quedan prohibidas. La impedancia requerida de la antena es de 50 ohms."

Approved Antennas

BWA-9O2-C--Antena, Omni 902-928 MHz, 2 dBd, junta de caucho, RP-SMA Macho
BWA-9O5-C--Antena, Omni 902-928 MHz, 5 dBd, junta de caucho, RP-SMA Macho
BWA-9O6-A--Antena, Omni 902-928 MHz, 6 dBd, fibra de vidrio, 1800mm, N Hembra
BWA-9Y10-A--Antena, Yagi, 900 MHz, 10 dBd, N Hembra

© Banner Engineering Corp. All rights reserved.
www.bannerengineering.com

Mexican Importer

Banner Engineering de Mèxico, S. de R.L. de C.V. | David Alfaro Siqueiros 103 Piso 2 Valle oriente | San Pedro Garza Garcia Nuevo Leòn, C. P. 66269

81 8363.2714

© Banner Engineering Corp. All rights reserved.