QCM50 Color Sensor Product Manual

Original Instructions
p/n: 209633 Rev. B
15-Jul-25
© Banner Engineering Corp. All rights reserved. www.bannerengineering.com

ПРОМЭЛЕКТРОНИКА/ sales@prom-elec.com

Contents

Chapter 1 Features 3
Models 3
Overview 4

Chapter 2 Installation Instructions 5
Sensor Installation 5
Wiring Diagrams 5

Chapter 3 Configuration Instructions 6
Menu System for the 4-pin Models 6
Menu System for the 5-pin and 8-pin Models 11
Program the QCM50 Sensor 16

Chapter 4 Specifications 17
FCC Part 15 Class A for Unintentional Radiators 17
Industry Canada ICES-003(A) 17
Dimensions 18

Chapter 5 Accessories 19
Cordsets 19
Brackets 20

Chapter 6 Product Support and Maintenance 21
Contact Us 21
Repairs 21
Banner Engineering Corp Limited Warranty 21

© Banner Engineering Corp. All rights reserved. www.bannerengineering.com

Chapter Contents

Models 3
Overview 4

Chapter 1 Features

High-performance color sensor with IO-Link



- Reliable color detection across the entire range of the sensor
- Up to 12 colors can be detected with one sensor, which saves inventory costs and enables faster changeover
- Available in a glare suppression model to reliably detect reflective targets
- Intuitive configuration with integrated digital display and on-board buttons
- IO-Link communication for remote configuration and monitoring

WARNING:

- **Do not use this device for personnel protection**
- Using this device for personnel protection could result in serious injury or death.
- This device does not include the self-checking redundant circuitry necessary to allow its use in personnel safety applications. A device failure or malfunction can cause either an energized (on) or de-energized (off) output condition.

Models

Models	Feature	Range (mm)	Spot Size (mm)	Outputs [1]	Stored Colors	Connection
QCM50-K3D25-Q8-5 [2]	Glare suppression	18 to 32	6 × 6 at 25 mm	3 Discrete	7	Integral 5-pin quick disconnect
QCM50-K1D40-Q8-4	Small spot size	18 to 60	4 × 4 at 40 mm	1 Discrete	1	Integral 4-pin M12 quick disconnect
QCM50-K3D40-Q8-5			4 × 4 at 40 mm	3 Discrete	7	Integral 5-pin M12 quick disconnect
QCM50-K5D40-Q8-8			4 × 4 at 40 mm	5 Discrete	12	Integral 8-pin M12 quick disconnect
QCM50-K1D60-Q8-4	Long range	20 to 150	8 × 8 at 60 mm	1 Discrete	1	Integral 4-pin M12 quick disconnect
QCM50-K3D60-Q8-5			8 × 8 at 60 mm	3 Discrete	7	Integral 5-pin M12 quick disconnect
QCM50-K5D60-Q8-8			8 × 8 at 60 mm	5 Discrete	12	Integral 8-pin M12 quick disconnect

[1] PNP/NPN Auto-Detect based on output connection.
[2] Polarized optics (glare suppression). Not for use with black objects.

© Banner Engineering Corp. All rights reserved.
www.bannerengineering.com

Overview

Sensor Features

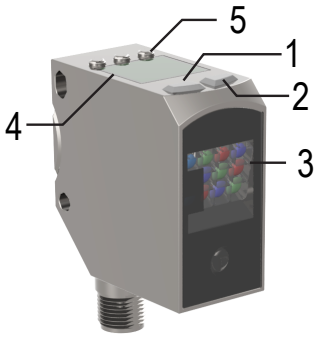

1. Green LED: Power Indicator and IO-Link / Red: Status/Error Indicator
2. Amber LED: Output Indicator
3. Optical window
4. Display
5. Buttons

© Banner Engineering Corp. All rights reserved.
www.bannerengineering.com

Chapter Contents

Sensor Installation 5
Wiring Diagrams 5

Chapter 2 Installation Instructions

Sensor Installation

Install the sensor so the object to be detected moves horizontally to the sensor.

Installation for glare suppression models

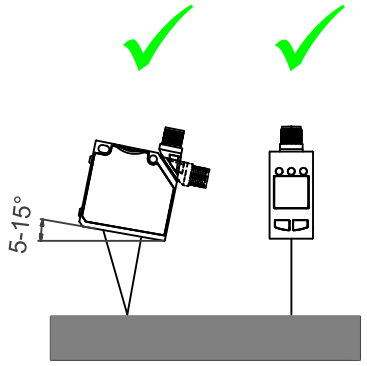

Installation for other models

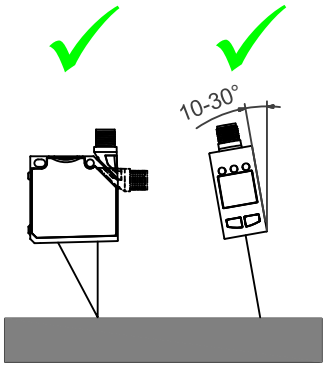

Installation for other models

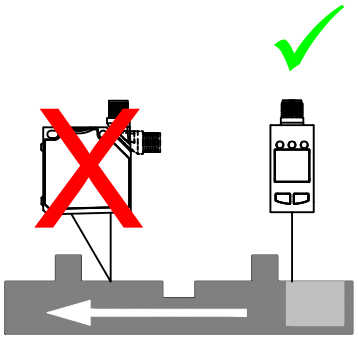

Wiring Diagrams

4-pin M12 male connection	5-pin M12 male connection	8-pin M12 male connection
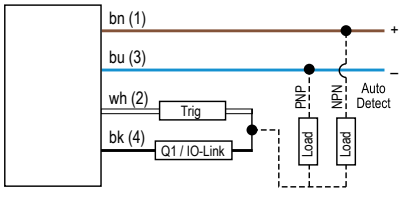	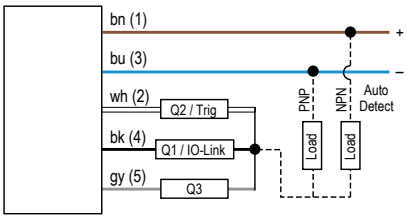	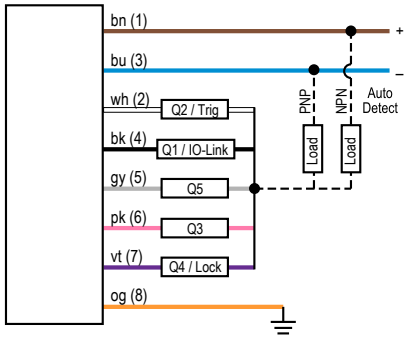
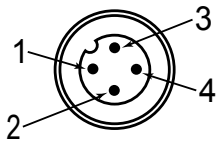	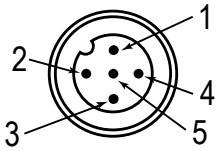	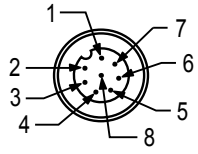

The QCM50 Color Sensor requires a shielded cable. Refer "Accessories" on page 19 for a list of recommended cables.

© Banner Engineering Corp. All rights reserved.
www.bannerengineering.com

Chapter Contents

Menu System for the 4-pin Models..... 6
Menu System for the 5-pin and 8-pin Models..... 11
Program the QCM50 Sensor..... 16

Chapter 3 Configuration Instructions

Menu System for the 4-pin Models

The following functions are available using the sensor's menu system. Q represents the transistor output.

Menu Map for the 4-pin Models

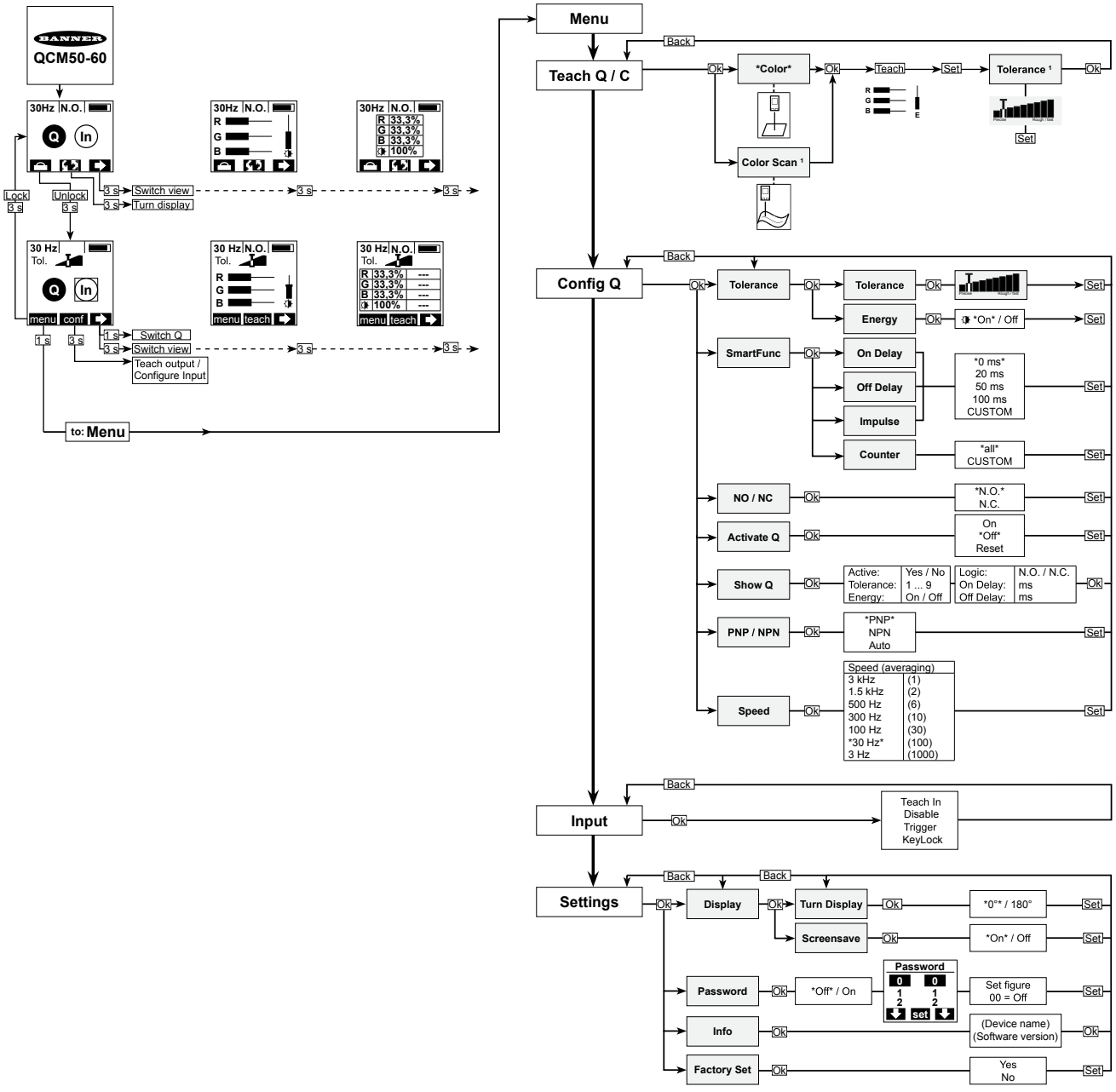

© Banner Engineering Corp. All rights reserved.
www.bannerengineering.com

Top Level Menu

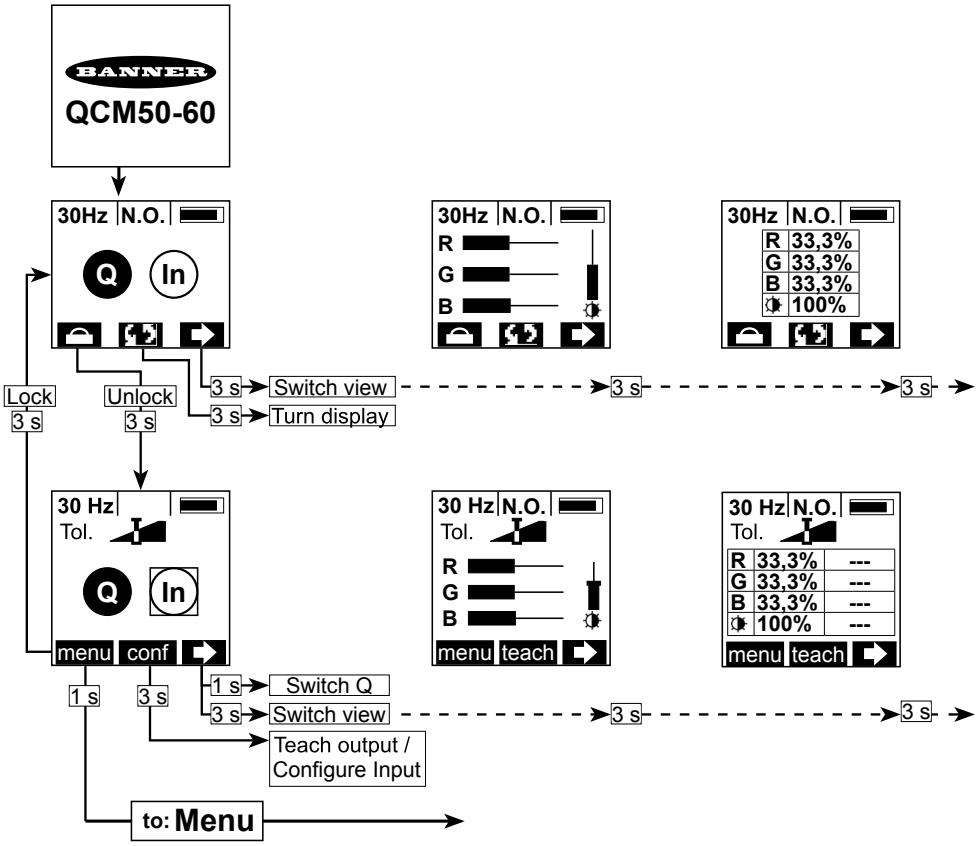

Views	Key
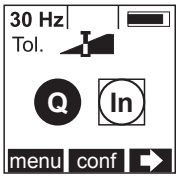	**CM**—Color Mode **N.O.**—Normally open Q4—Switching out; white (off) or black (on) RGB—Red/Green/Blue **Tol.**—Tolerance (1 to 9) —Energy / brightness (normalized values) ○ Off ● On ▢ Selected ⊗ Deactivated
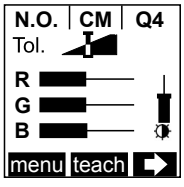	
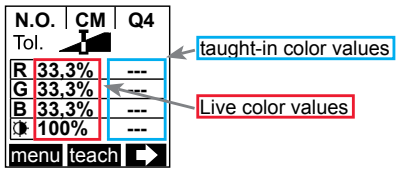	

Fast Teach-In	
Teach-in and Tolerance	Press **Teach** or **Tol** for 1 second to toggle between the two settings. Press **Teach** for 3 seconds to teach the selected channel.

© Banner Engineering Corp. All rights reserved.
www.bannerengineering.com

Teach Menu

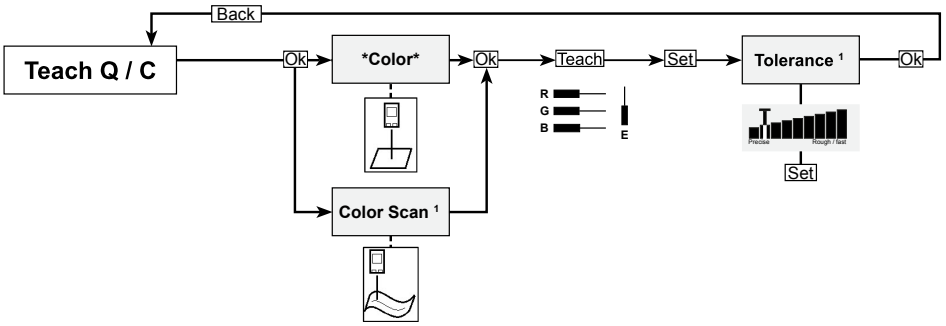

Teach Menu	
Color	Teaches the single color the sensor sees at this moment.
Color Scan	Teaches all colors the sensor sees during the scan. The scanning can be paused.
Tolerance	Sets the tolerance to one of 9 levels.

Config Q Menu

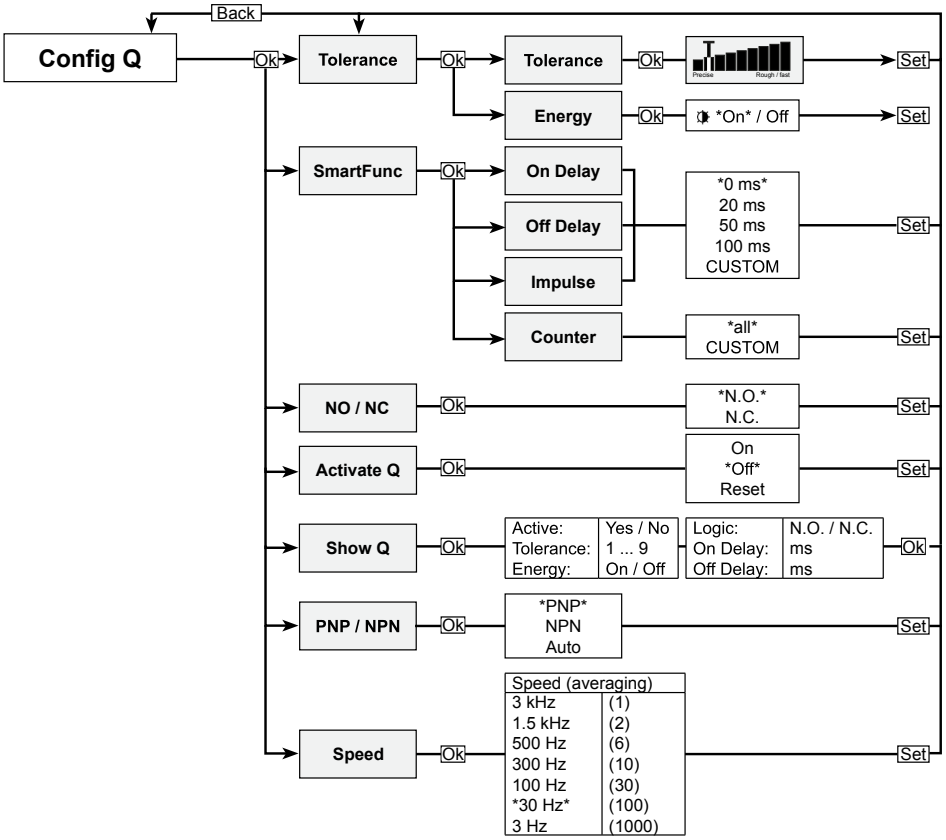

Config Q	
Tolerance	Tolerance adjustable in 9 levels.
Energy	Energy evaluation can be turned off. This may be helpful in applications with object distances larger 65 mm. Past 65 mm, the energy decreases with increasing object distance. The color values remain the same.

Continued on page 9

© Banner Engineering Corp. All rights reserved.
www.bannerengineering.com

Continued from page 8

Config Q	
Smart Function	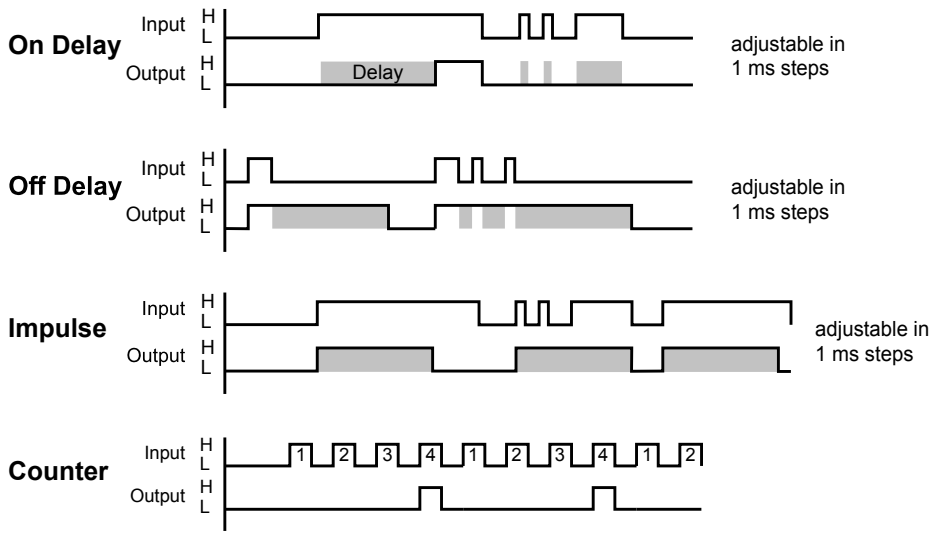
Activate Q	Activate / Deactivate—The stored colors C remain in the sensor. Reset— Resets the switching output to factory settings. Stored colors on this Q will be deleted.
PNP/NPN	Automatically detects the PNP/ NPN setting.
Speed	Speed (Averaging)—Less speed results in more precise color recognition. Additional averaging also helps if ambient light disturbs the measurement.

Input Menu

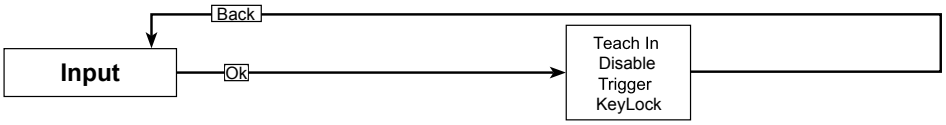

Input	
Input	Different input function can be set. • Trigger = Trigger (24 V: sensor does measure, 0 V: sensor does not measure). • KeyLock = Keylock (24 V keys are locked, 0 V keys are unlocked). • Teach = After having the teach pin on 24 V for 3 s, the senor is taught the color that it sees at this moment. Any further high signal will be ignored, until a falling edge occurs.

Settings Menu

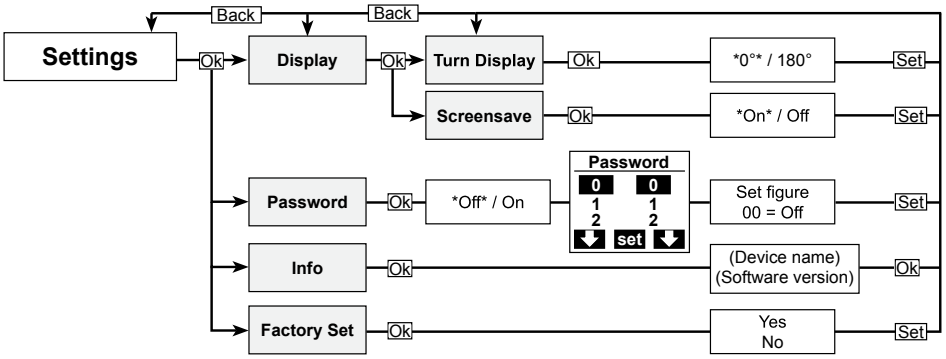

© Banner Engineering Corp. All rights reserved.
www.bannerengineering.com

Settings	
Display	Turn Display—Display is turned 180°. Screensave ON—Display turns off after 3 minutes. Screensave OFF—Display stays on.
Password	Definition of unlock password. This has to be entered each time when unlocking the sensors. If password is forgotten, a master password can be obtained from the factory.
Factory Set	Deletes all modifications that are done since set up of the sensor, all settings are reset to original factory settings.

© Banner Engineering Corp. All rights reserved.

Menu System for the 5-pin and 8-pin Models

The following functions are available using the sensor's menu system. Q represents the transistor output.

Menu Map for the 5-pin and 8-pin Models

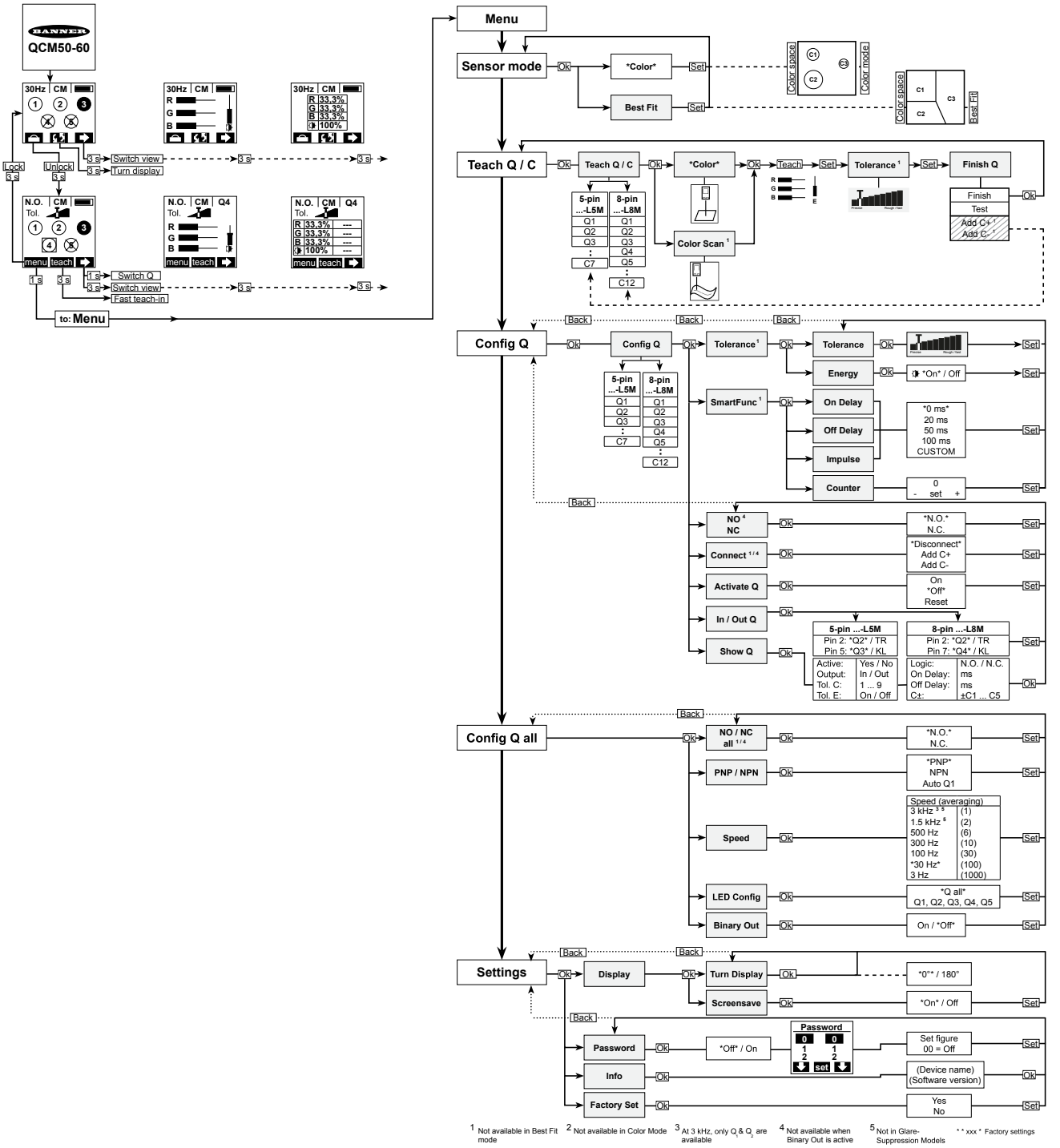

© Banner Engineering Corp. All rights reserved.
www.bannerengineering.com

Top Level Menu

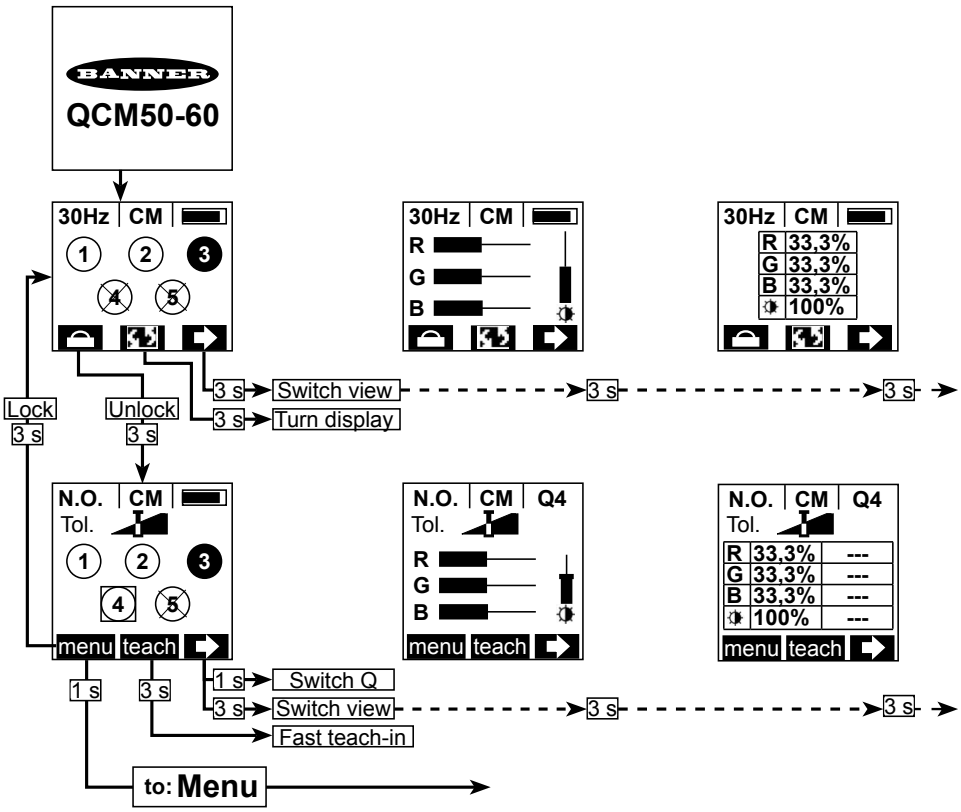

Views	Key
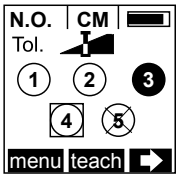	**CM** — Color Mode BF—Best Fit Mode **N.O.** —Normally open Q1 through Q5—Switching output; white (off) or black (on) RGB = red / green / blue **Tol.** —Tolerance (1 to 9)
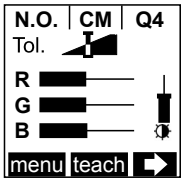	—Energy / brightness (normalized values)
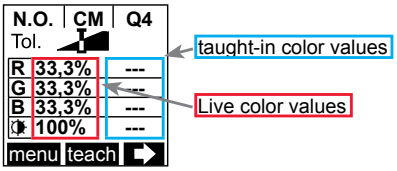	Off On Selected Deactivated —Signal quality (flashing = too weak; flashing filled = signal overload)

© Banner Engineering Corp. All rights reserved.
www.bannerengineering.com

Fast Teach-In	
Teach-in and Tolerance	Press **Teach** or **Tol** for 1 second to toggle between the two settings. Press **Teach** for 3 seconds to teach the selected channel.

Sensor Mode Menu

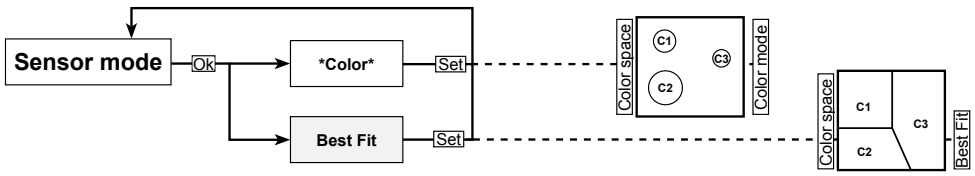

Sensor Mode	
Color	Validates the taught color. Required colors ≥ 1. Application = color detection / color evaluation. (Use when the false colors are not known.)
Best Fit	Switches the closest taught color. Required colors ≥ 2. • One channel of the sensor always switches. • To prevent unwanted switching, teaching of the background is recommended. Application = Sorting of known objects. (Use when it should be distinguished between known colors.) • C+ and C- is not possible in BF mode. • N.O. / N.C. settings & Smart functions are deactivated in BF mode. When returning to color mode they are restored. • *N.O.* / N.C. settings can in BF mode only be adjusted for all Q at once via Config Q all.

Changing mode deactivates all Q. The stored colors C remain however.

Teach Q/C Menu

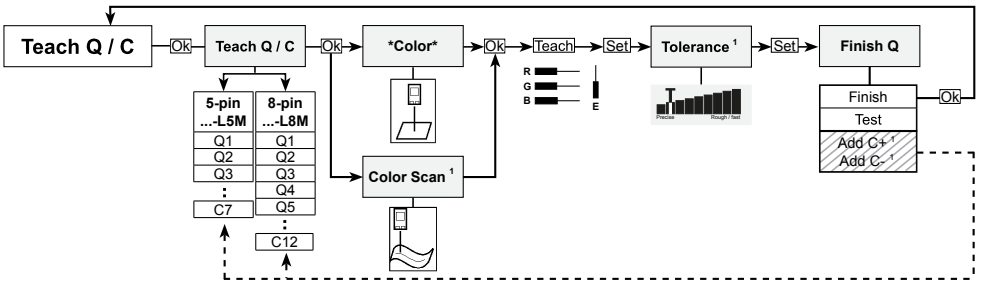

Teach Q/C Menu	
Teach Q/C	Teaches a color (C) on a switching output (Q).
Color	Teaches a color point.
Color Scan	Teaches a color space (teaches colors until the stop button is pressed). Scanning can be paused.
Tolerance	Sets the tolerance to one of 9 levels.
Finish Q	Finish: Save and close. Test: Checks whether a detection will be reliable: • 3x green LED = OK, 3x red LED = not OK • C+: add an additional color (C) to the switching output (Q) that will be detected as well. • C-: add an additional color (C) to the switching output (Q) that must not be detected.

© Banner Engineering Corp. All rights reserved.
www.bannerengineering.com

Config Q Menu

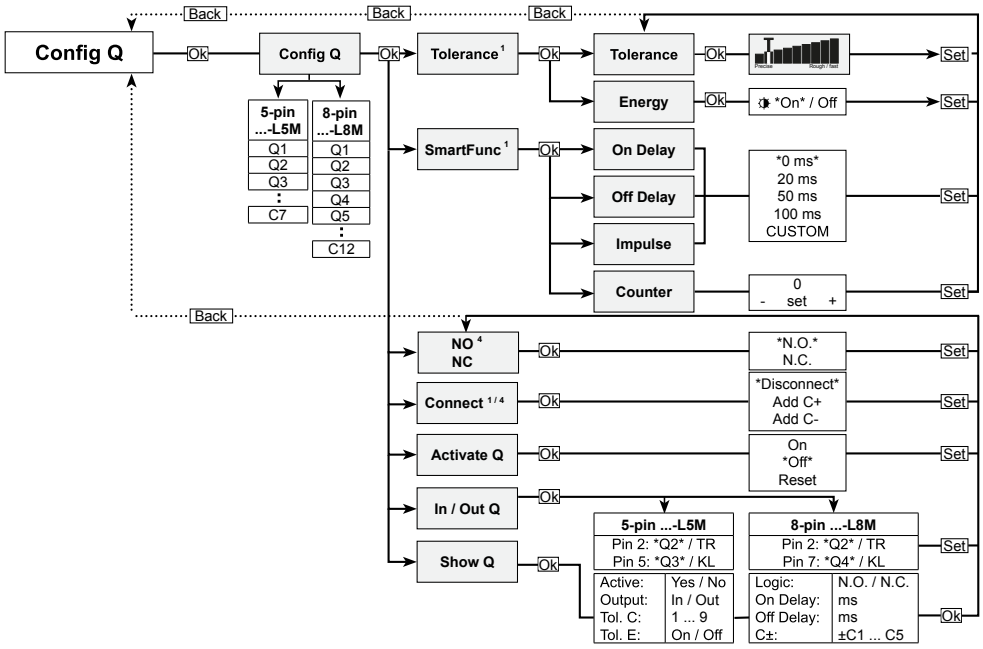

Config Q	
Tolerance	Tolerance is adjustable in 9 levels.
Energy	Energy evaluation can be turned off. This may be helpful in applications with object distances larger 65 mm. Past 65 mm, the energy decreases with increasing object distance. The color values remain the same.
Smart Function	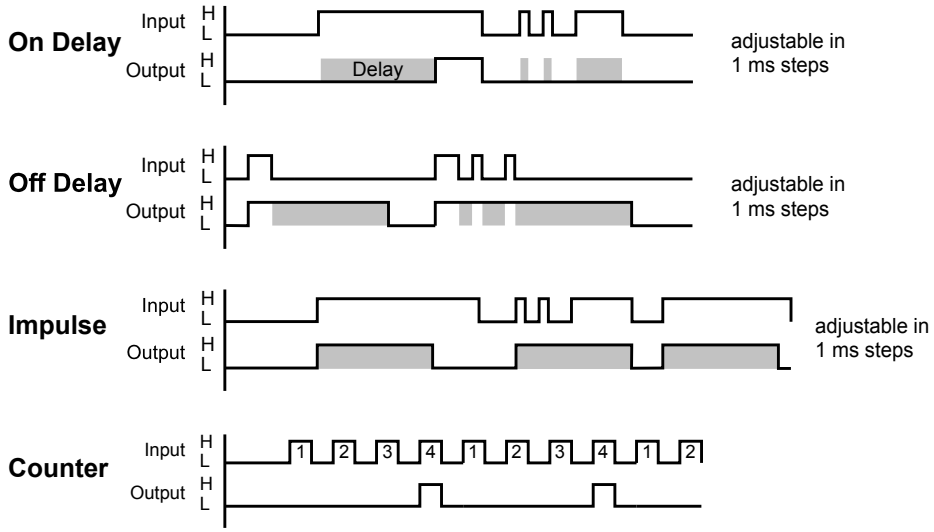
Connect C+/C-	The sensor can store more colors than it has outputs. Thus colors C and switching outputs Q are distinguished. It is preset which colors can be connected. 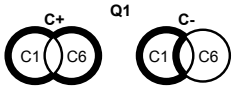
Activate Q	Activate / Deactivate—The stored colors C remain in the sensor. Reset— Resets the switching output to factory settings. Stored colors on this Q will be deleted.

Continued on page 15

© Banner Engineering Corp. All rights reserved.
www.bannerengineering.com

Continued from page 14

Config Q	
In/Out Q	Some switching outputs can be set as input or output. • TR = Trigger (high = lamp on, low = lamp off) • KL = Keylock (high = keys are locked, low = keys are unlocked) • Low signal ≤ 0.8 V, high signal ≥ 3 V

Config Q All Menu

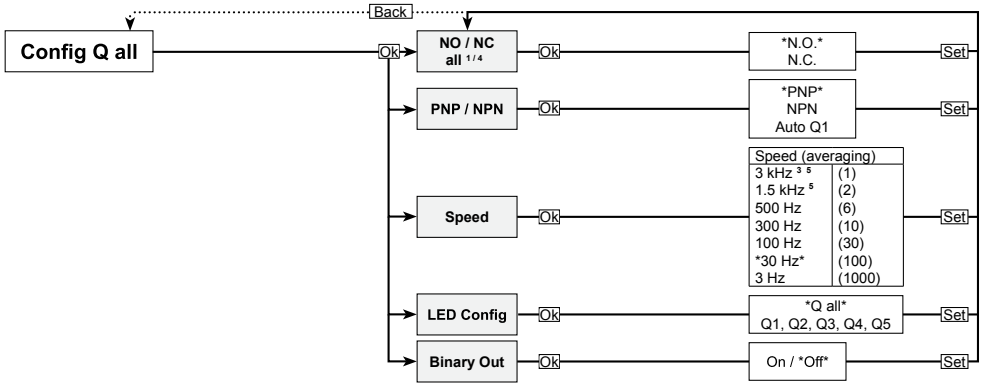

Config Q All		
PNP/NPN	Setting for all Q. Autodetect (Auto Q1) is set based on switching output Q1.	
Speed	Speed (Averaging). Less speed results with more precise color recognition. Additional averaging also helps if ambient light disturbs the measurement.	
Binary Out	Logically combines the switching outputs in order to be able to detect up to 7 (5-pin models) / 12 (8-pin models) colors. The combination is shown in the figures below. Thereby: • Connected colors will be disconnected. • Always only one color switches. The priority is C1 > C2 > C3... • Smart functions are not available in this mode. • All switching outputs will be set to N.O. Q off / Q on 5-pin...-L5M C1 C2 C3 C4 C5 C6 C7 Q1 Q2 Q3 8-pin...-L8M C1 C2 C3 C4 C5 C6 C7 C8 C9 C10 C11 C12 Q1 Q2 Q3 Q4 Q5 No functionality in Binary Out	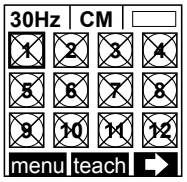

Settings Menu

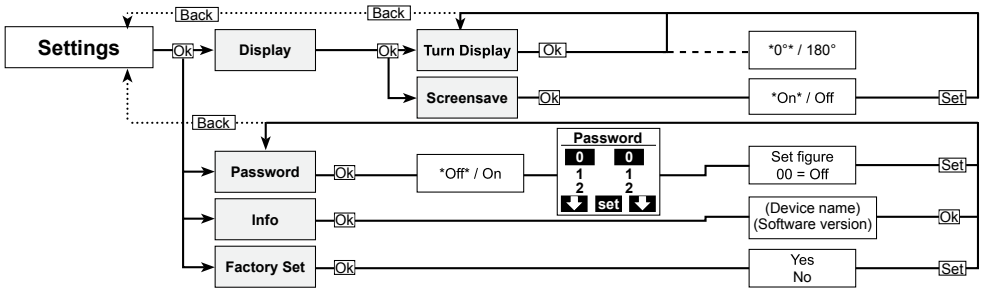

© Banner Engineering Corp. All rights reserved.
www.bannerengineering.com

Settings	
Display	Turn Display—Display is turned 180°. Screensave ON—Display turns off after 3 minutes. Screensave OFF—Display stays on.
Password	Definition of unlock password. This has to be entered each time when unlocking the sensors. If the password is forgotten, a master password can be obtained from the factory.
Factory Set	Deletes all modifications to the sensor, and all settings are reset to the original factory settings.

Program the QCM50 Sensor

Sensors have a large depth of field, so mount the sensor within its specified range (varies by model). For reflective targets, the sensor can be rotated up to 15 degrees from perpendicular to reduce specular reflections.

The sensor buttons correspond to the menu options listed at the top of the LCD screen. These options change with each screen.

1. Press and hold **Unlock** for 3 seconds to access the Menu.
2. Press **Menu**.
3. Select **Sensor Mode** and press **OK**.

   A warning message stating that changing the mode deactivates all outputs displays. Press OK to clear the message.
4. Use the arrow button to select **Color** or **Best Fit** mode and press **Set**.
   - Color Mode—Validates the taught color; requires one or more color.
   - Best Fit Mode—Switches to the closest taught color; requires two or more colors.
5. Use the **Down** arrow to highlight **Teach Q/C** (Q are transistor outputs; C are additional colors not associated with a wired output) and press **OK**.
6. Select the Q or C you would like to teach and press **OK**.
7. Select **Color** for a target that is not moving and press **OK**.

   In **Color Mode**, you also can select **Color Scan** if the target is moving or If you have a range of colors that you want associated with a single output.
8. Present the target under the sensor LED and press **Teach**.

   In **Color Mode**, there will be a bar graph on the screen showing the red/blue/green values of the target.
9. Press **Set**.
10. In **Color Mode**, adjust the tolerance using the **Down** arrow. Press **Set**.
11. Select **Finish** to return to the Run mode configuration menu, then press **OK**.

    In **Best Fit** mode, at least two colors need to be configured. Repeat the previous steps with an additional Q or C being configured.
12. Press **Back** to return the sensor to Run mode.
13. Verify that the output turns on and off when you present and remove the target color.

© Banner Engineering Corp. All rights reserved.

Chapter Contents

FCC Part 15 Class A for Unintentional Radiators 17
Industry Canada ICES-003(A) 17
Dimensions 18

Chapter 4 Specifications

Supply Voltage and Current
18 to 30 V DC
Less than 60 mA, exclusive of load

Supply Protective Circuitry
Protected against reverse polarity and transient voltages

Output Configuration
Solid-state auto-detect PNP/NPN output with IO-Link on pin 4
Output current < 100 mA
Outputs are protected against short circuit

Light Used
LED, white

Response Time
Glare suppression models: ≤ 540 µs (at 500 Hz)
Other models: ≤ 180 µs (at ≥ 1500 Hz)

LED class
LED risk group 2
(EN 62471:2008)

Maximum Capacitive Load
< 100 nF

Control Input
Trigger; keylock

Construction
Materials: Zinc die-cast, matte chrome housing; PMMA front screen and display

Warm-up Time
5 minutes

Power On Delay
< 150 ms

IO-Link
Communication mode: COM 2
Minimum cycle time: 4 ms
SIO mode: Compatible
Length of process data: 2 bytes / 6 bytes
Specification: 1.1

Environmental Conditions
Operating: –20 °C to +55 °C (–4 °F to +131°F)
Storage: –20 °C to +80 °C (–4 °F to +176 °F)

Environmental Rating[3]
IP67, IP69

Vibration and Mechanical Shock
EN 60947-5-2

Certifications

Banner Engineering BV
Park Lane, Culliganlaan 2F bus 3
1831 Diegem, BELGIUM

Required Overcurrent Protection

WARNING: Electrical connections must be made by qualified personnel in accordance with local and national electrical codes and regulations.

Overcurrent protection is required to be provided by end product application per the supplied table.

Overcurrent protection may be provided with external fusing or via Current Limiting, Class 2 Power Supply.

Supply wiring leads < 24 AWG shall not be spliced.

For additional product support, go to www.bannerengineering.com.

Supply Wiring (AWG)	Required Overcurrent Protection (A)	Supply Wiring (AWG)	Required Overcurrent Protection (A)
20	5.0	26	1.0
22	3.0	28	0.8
24	1.0	30	0.5

[3] When connected with a IP67/IP69 cordset

FCC Part 15 Class A for Unintentional Radiators

This equipment has been tested and found to comply with the limits for a Class A digital device, pursuant to Part 15 of the FCC Rules. These limits are designed to provide reasonable protection against harmful interference when the equipment is operated in a commercial environment. This equipment generates, uses, and can radiate radio frequency energy and, if not installed and used in accordance with the instruction manual, may cause harmful interference to radio communications. Operation of this equipment in a residential area is likely to cause harmful interference in which case the user will be required to correct the interference at his own expense.

(Part 15.21) Any changes or modifications not expressly approved by the party responsible for compliance could void the user's authority to operate this equipment.

Industry Canada ICES-003(A)

This device complies with CAN ICES-3 (A)/NMB-3(A). Operation is subject to the following two conditions: 1) This device may not cause harmful interference; and 2) This device must accept any interference received, including interference that may cause undesired operation.

© Banner Engineering Corp. All rights reserved.
www.bannerengineering.com

Cet appareil est conforme à la norme NMB-3(A). Le fonctionnement est soumis aux deux conditions suivantes : (1) ce dispositif ne peut pas occasionner d'interférences, et (2) il doit tolérer toute interférence, y compris celles susceptibles de provoquer un fonctionnement non souhaité du dispositif.

Dimensions

All measurements are listed in millimeters, unless noted otherwise. The measurements provided are subject to change.

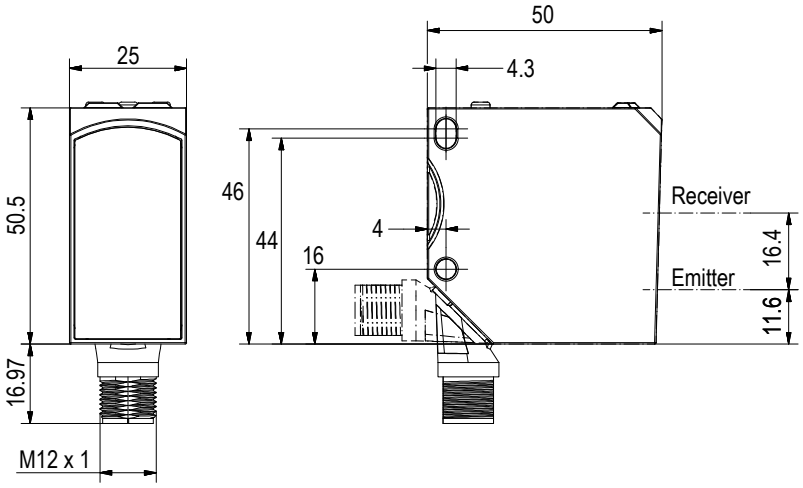

© Banner Engineering Corp. All rights reserved.

Chapter Contents

Cordsets 19
Brackets 20

Chapter 5 Accessories

Cordsets

4-Pin Single-Ended M12 Female Shielded Cordsets					
Model	**Length**	**Style**	**Dimensions**	**Pinout (Female)**	
MQDEC2-406	2 m (6.56 ft)	Straight	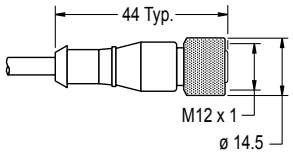	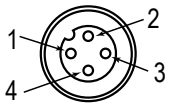	1 = Brown 2 = White 3 = Blue 4 = Black
MQDEC2-415	5 m (16.4 ft)				
MQDEC2-430	9 m (29.5 ft)				
MQDEC2-450	15.2 m (50 ft)				
MQDEC2-406RA	2 m (6.56 ft)	Right-Angle	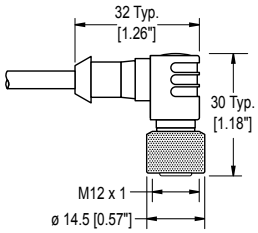	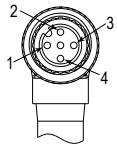	
MQDEC2-415RA	5 m (16.4 ft)				
MQDEC2-430RA	9 m (29.5 ft)				
MQDEC2-450RA	15.2 m (50 ft)				

5-Pin Single-Ended M12 Female Shielded Cordsets				
Model	**Length**	**Style**	**Dimensions**	**Pinout (Female)**
MQDEC2-506	2 m (6.56 ft)	Straight	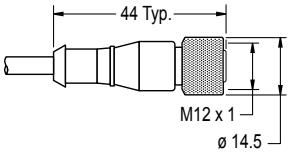	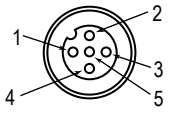
MQDEC2-515	5 m (16.4 ft)			
MQDEC2-530	9 m (29.5 ft)			
MQDEC2-550	15 m (49.2 ft)			
MQDEC2-575	23 m (75.44 ft)			
MQDEC2-5100	30.5 m (100 ft)			
MQDEC2-506RA	2 m (6.56 ft)	Right-Angle	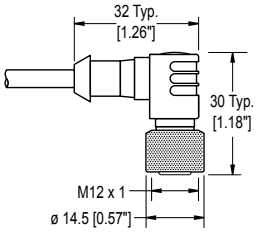	1 = Brown 2 = White 3 = Blue 4 = Black 5 = Gray
MQDEC2-515RA	5 m (16.4 ft)			
MQDEC2-530RA	9 m (29.5 ft)			
MQDEC2-550RA	15 m (49.2 ft)			
MQDEC2-575RA	23 m (75.44 ft)			
MQDEC2-5100RA	31 m (101.68 ft)			

© Banner Engineering Corp. All rights reserved.
www.bannerengineering.com

8-Pin Single-Ended M12 Female Shielded Cordsets				
Model	**Length**	**Style**	**Dimensions**	**Pinout (Female)**
MQ-QCM50-806	6 ft	Straight	Coming soon	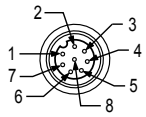 1 = Brown 2 = White 3 = Blue 4 = Black 5 = Gray 6 = Pink 7 = Violet 8 = Orange
MQ-QCM50-815	15 ft			

Brackets

All measurements are listed in millimeters, unless noted otherwise. The measurements provided are subject to change.

SMBQCM50DT

- Dovetail clamp bracket
- Allows sensor to mount to a 12 mm round bar or a 10 mm × 10 mm square bar
- Adjustable ± 40 degrees
- Material: Zinc die cast

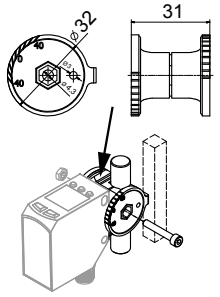

SMBQCM50FA

- Swivel bracket with tilt and pan movement for precision adjustment
- Easy sensor mounting to extruded rail t-slots
- Side mounting of the QCM50 with the included hardware packet
- Includes 3/8-16 × 2 in socket head cap screw
- 304 stainless steel

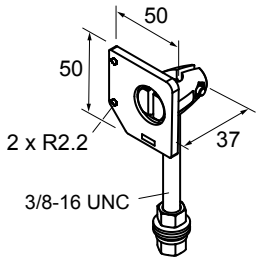

SMBQCM50L

- Right-angle mounting bracket with a curved slot for versatile orientation
- ± 12-degree tilt adjustment
- Side mounting of the QCM50 with the included hardware packet
- 14-gauge stainless steel

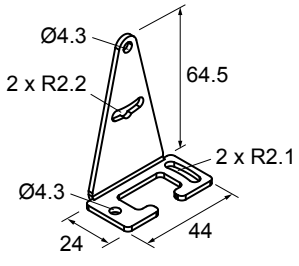

© Banner Engineering Corp. All rights reserved.
www.bannerengineering.com

Chapter Contents

Contact Us 21
Repairs 21
Banner Engineering Corp Limited Warranty 21

Chapter 6 Product Support and Maintenance

Contact Us

Banner Engineering Corp. headquarters is located at: 9714 Tenth Avenue North | Plymouth, MN 55441, USA | Phone: + 1 888 373 6767

For worldwide locations and local representatives, visit www.bannerengineering.com.

Repairs

Contact Banner Engineering for troubleshooting of this device. **Do not attempt any repairs to this Banner device; it contains no field-replaceable parts or components.** If the device, device part, or device component is determined to be defective by a Banner Applications Engineer, they will advise you of Banner's RMA (Return Merchandise Authorization) procedure.

> **IMPORTANT:** If instructed to return the device, pack it with care. Damage that occurs in return shipping is not covered by warranty.

Banner Engineering Corp Limited Warranty

Banner Engineering Corp. warrants its products to be free from defects in material and workmanship for one year following the date of shipment. Banner Engineering Corp. will repair or replace, free of charge, any product of its manufacture which, at the time it is returned to the factory, is found to have been defective during the warranty period. This warranty does not cover damage or liability for misuse, abuse, or the improper application or installation of the Banner product.

THIS LIMITED WARRANTY IS EXCLUSIVE AND IN LIEU OF ALL OTHER WARRANTIES WHETHER EXPRESS OR IMPLIED (INCLUDING, WITHOUT LIMITATION, ANY WARRANTY OF MERCHANTABILITY OR FITNESS FOR A PARTICULAR PURPOSE), AND WHETHER ARISING UNDER COURSE OF PERFORMANCE, COURSE OF DEALING OR TRADE USAGE.

This Warranty is exclusive and limited to repair or, at the discretion of Banner Engineering Corp., replacement. **IN NO EVENT SHALL BANNER ENGINEERING CORP. BE LIABLE TO BUYER OR ANY OTHER PERSON OR ENTITY FOR ANY EXTRA COSTS, EXPENSES, LOSSES, LOSS OF PROFITS, OR ANY INCIDENTAL, CONSEQUENTIAL OR SPECIAL DAMAGES RESULTING FROM ANY PRODUCT DEFECT OR FROM THE USE OR INABILITY TO USE THE PRODUCT, WHETHER ARISING IN CONTRACT OR WARRANTY, STATUTE, TORT, STRICT LIABILITY, NEGLIGENCE, OR OTHERWISE.**

Banner Engineering Corp. reserves the right to change, modify or improve the design of the product without assuming any obligations or liabilities relating to any product previously manufactured by Banner Engineering Corp. Any misuse, abuse, or improper application or installation of this product or use of the product for personal protection applications when the product is identified as not intended for such purposes will void the product warranty. Any modifications to this product without prior express approval by Banner Engineering Corp will void the product warranties. All specifications published in this document are subject to change; Banner reserves the right to modify product specifications or update documentation at any time. Specifications and product information in English supersede that which is provided in any other language. For the most recent version of any documentation, refer to: www.bannerengineering.com.

For patent information, see www.bannerengineering.com/patents.

© Banner Engineering Corp. All rights reserved.
www.bannerengineering.com

LinkedIn

X (formerly Twitter)

Facebook



© 2025. All rights reserved.
www.bannerengineering.com