MODEL NO.	"L"	P/N
PIT43TB5HF	1000 [39]	56291
PIT46TB5HF	2000 [79]	69728
PIT49TB5HF	2743 [108]	70839

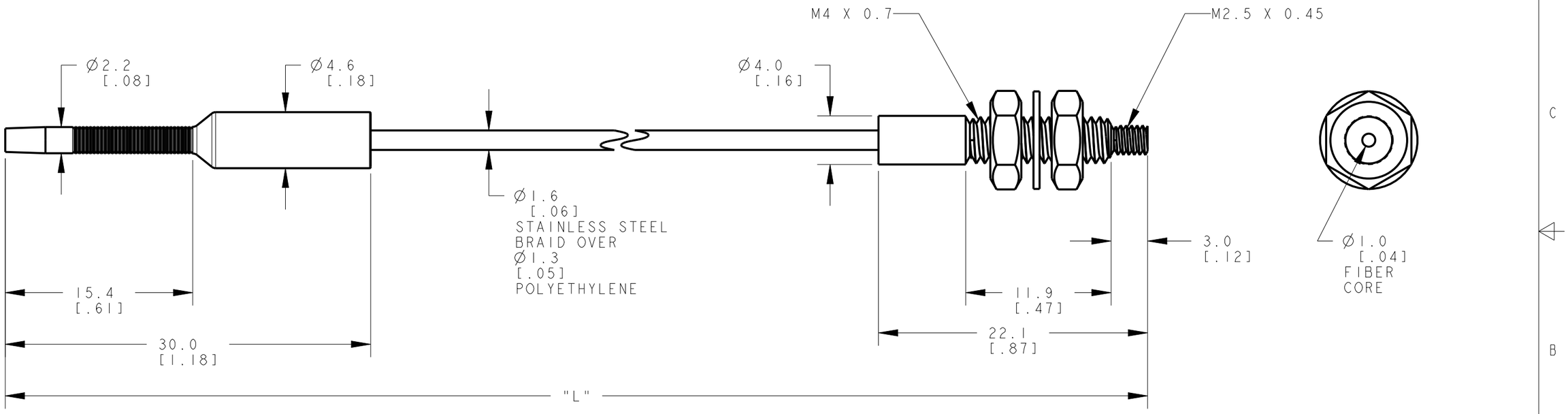

NOTES:
1. ALL DIMENSIONS ARE MILLIMETERS [INCHES] UNLESS OTHERWISE NOTED.
2. REFER TO "www.bannerengineering.com" FOR ADDITIONAL DATA AND SPECIFICATIONS.

This drawing is the property of BANNER ENGINEERING CORP. Any use or reproduction, in any form, without prior written permission of Banner is prohibited.
© 2015 Banner Engineering Corp.

THIRD ANGLE PROJECTION

BANNER ENGINEERING CORP.
www.bannerengineering.com

TITLE
PIT4 HIGH FLEX STEEL SKIN

SIZE	DRAWING NO.	REV.
B	193951	A
SCALE 3:1	SHEET 1 OF 1	

CREO

ПРОМЭЛЕКТРОНИКА/ sales@prom-elec.com