MODEL NO.	"L"	P/N
PBT46UHTI	2000 [79]	42799
PBT415UHTI	4572 [180]	42806
PBT430UHTI	9144 [360]	70736
PBT450UHTI	15240 [600]	65926

THE MAXIMUM OPERATING TEMPERATURE OF THIS CABLE IS 105°C [221°F].

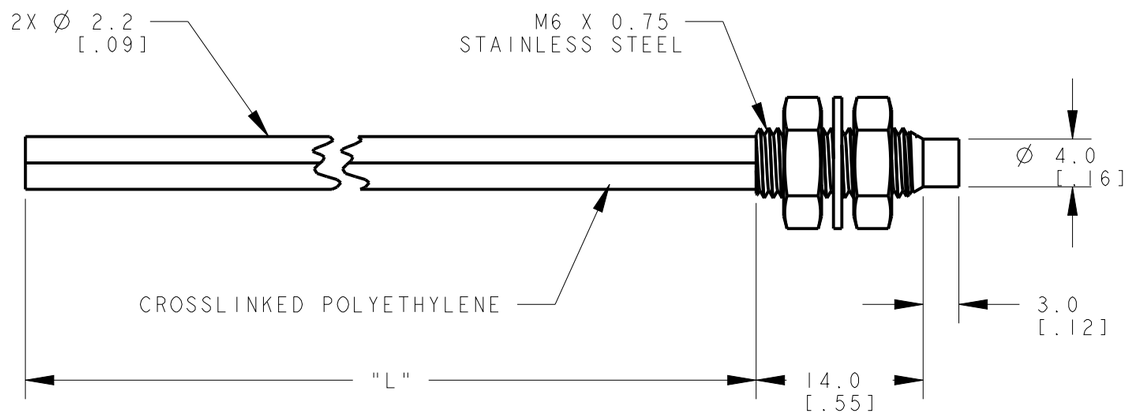

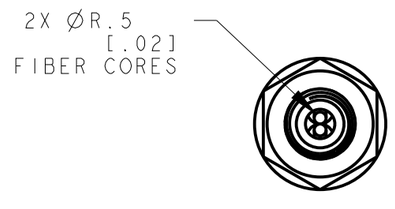

NOTES:
1. ALL DIMENSIONS ARE MILLIMETERS [INCHES] UNLESS OTHERWISE NOTED.
2. REFER TO "www.bannerengineering.com" FOR ADDITIONAL DATA AND SPECIFICATIONS.

This drawing is the property of BANNER ENGINEERING CORP. Any use or reproduction, in any form, without prior written permission of Banner is prohibited.
© 2015 Banner Engineering Corp.

THIRD ANGLE PROJECTION

BANNER ENGINEERING CORP.
www.bannerengineering.com

TITLE
PBT4 SERIES UNTERMINATED

SIZE	DRAWING NO.	REV.
B	192752	A
SCALE 2:1	SHEET 1 OF 1	

CREO

ПРОМЭЛЕКТРОНИКА/ sales@prom-elec.com