TLF100 Pro Daylight Visible Flush Mount Tower Light

Features

100 mm Programmable Daylight Visible Flush Mount Tower Light

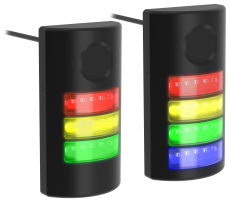

- Rugged, versatile, and easy-to-install 3- and 4-segment tower lights
- Flush mounting allows for easy integration to machines and equipment
- Programmable using Banner's Pro Editor software and Pro Converter Cable
- Intense levels of light output for areas with high ambient light - even outdoors
- Audible models available with sealed audible element
- 14 selectable audible tones and audible intensity control
- 24 V DC operation
- No assembly required
- Bright, single-color LEDs provide highly visible indication for indoor or outdoor applications

Models

Family	Style	Housing	Segment 1 Color	Segment 2 Color	Segment 3 Color	Segment 4 Color	Audible Alarm	Connection
TLF100	**P**	**DL**	**G**	**Y**	**R**			**QP**
	P = Pro	DL = Daylight visible	G = Green Y = Yellow R = Red B = Blue W = White			Blank = Three segment G = Green Y = Yellow R = Red B = Blue W = White	Blank = None A = Sealed audible	Blank = 2 m (6.5 ft) integral PVC-jacketed cable QP = 150 mm (6 in) PVC-jacketed cable with a 5-pin or 8-pin M12 male quick-disconnect connector, depending on model

Configuration Instructions

Pro Editor

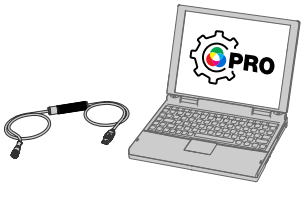

Use Banner's Pro Editor software and Pro Converter Cable to create custom configurations by selecting different colors, flash patterns, and animations.
For more information visit www.bannerengineering.com/proeditor.

Original Instructions
16-Apr-26

© Banner Engineering Corp. All rights reserved.
www.bannerengineering.com

224885
p/n: 224885 Rev. A

ПРОМЭЛЕКТРОНИКА/ sales@prom-elec.com

Full Preview Connection (Required)

The full preview connection must be used for the TLF100 Pro Daylight Visible Flush Mount Tower Light.

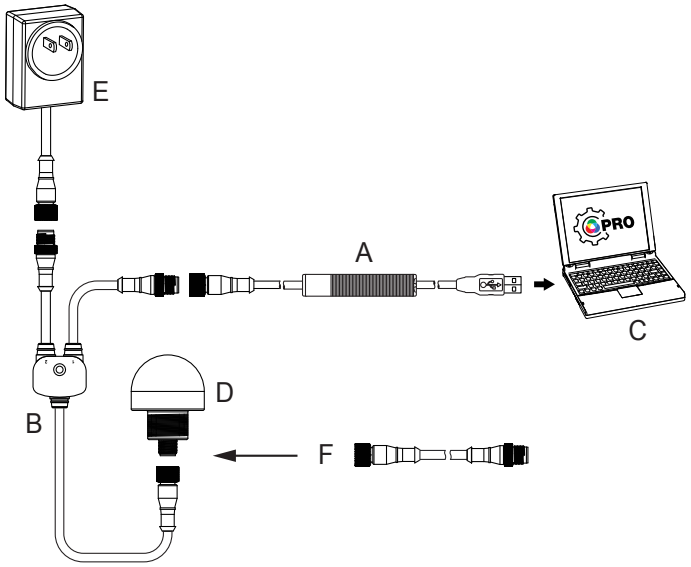

A = Pro Converter Cable (MQDC-506-USB)
B = Splitter (CSB-M1251FM1251M)
C = PC running Pro Editor software
D = Any Banner Pro Series-enabled device (K50 shown)
E = Power Supply (PSW-24-1, PSW-24-2, or PSD-24-4)
F = 8-Pin to 5-Pin Double-Ended Cordset (MQDC-801-5M-PRO), required for 8-Pin models

Wiring

NOTE: All models are bimodal and can be wired as PNP or NPN devices.

5-pin/Wire Models

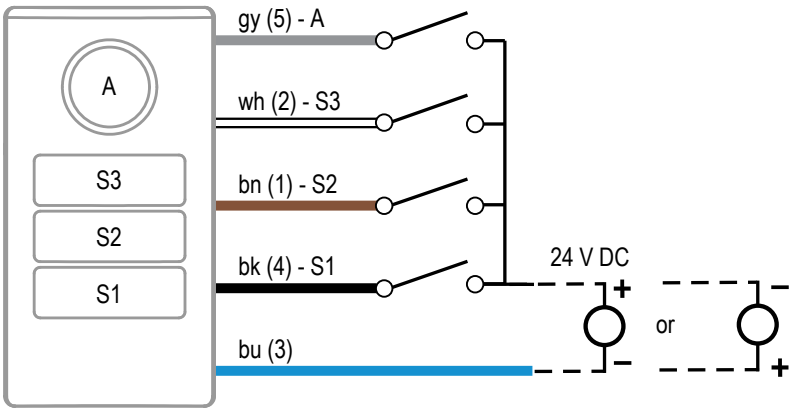

S1 = Color 1
S2 = Color 2
S3 = Color 3
S4 = Color 4
A = Audible

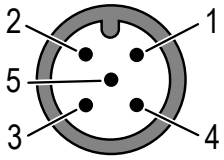

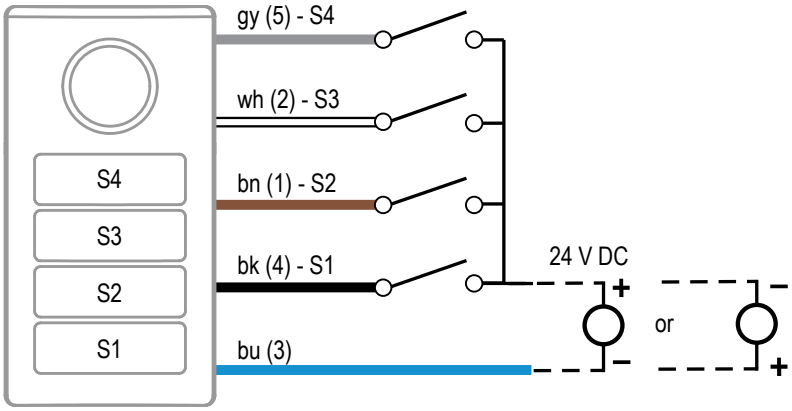

Pin	Color	Segment Mode	Advanced Mode
3	blue	Common	Common (PNP) or 24 V DC (NPN)
4	black	Color 1	Reset Input
1	brown	Color 2	24 V DC (PNP) or Common (NPN)
2	white	Color 3	PWM, PFM, Counter, or Timer input
5	gray	Color 4/Audible	N/A

© Banner Engineering Corp. All rights reserved. www.bannerengineering.com

8-pin/Wire Models

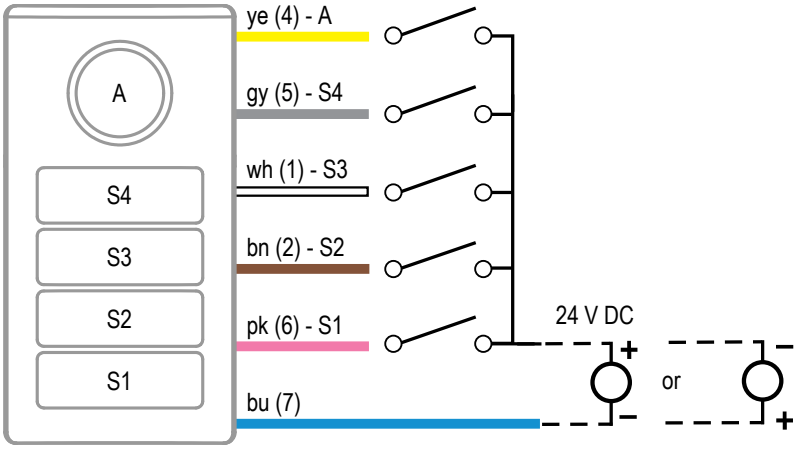

S1 = Color 1
S2 = Color 2
S3 = Color 3
S4 = Color 4
A = Audible

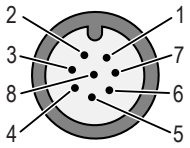

Pin	Color	Segment Mode	Advanced Mode
7	blue	Common	Common (PNP) or 24 V DC (NPN)
6	pink	Color 1	Reset Input
2	brown	Color 2	24 V DC (PNP) or Common (NPN)
1	white	Color 3	PWM, PFM, Counter, or Timer input
5	gray	Color 4	N/A
4	yellow	Audible	N/A
8	red	N/A	N/A
3	green	N/A	N/A

Pro Editor Configuration for the TLF100

Banner's Pro Editor software offers an easy way to configure Pro Series-enabled touch and indicator devices, allowing users full control of device states. The easy-to-use configuration software provides a variety of tools and capabilities to solve a wide range of applications. Pro Editor includes a preview mode that allows users to verify device performance before writing a configuration to a device. Configure any Pro Series-enabled device using the free Pro Editor software, available for download at www.bannerengineering.com/proeditor.

Segment Mode—Use Segment Mode to activate each segment and to control the input wire, animation, intensity, and speed.

NOTE: Segment colors for daylight visible models are static and cannot be changed.

Segment Mode Animation	Description
Off	Segment is off
Steady	Segment is on at defined intensity
Flash	Segment flashes at defined speed, intensity, and pattern (normal, strobe, three pulse, SOS, or random)
Intensity Sweep	Segment repeatedly increases and decreases intensity between 0% to 100% at defined speed and intensity

Level—The light adjusts position continuously based on the PFM or PWM input value and defined animation in up to four thresholds. The PFM signal frequency range can be from 100 to 5,000 Hz. The PWM duty cycle range can be from 0 to 100%.

Timer—The timer option uses the TLF100 as a timer, counting up or counting down. Set the total time and choose up to four thresholds to change the visual appearance of the device as time advances. The timer starts when 24 V DC is applied to the timer run input wire, and paused when left floating or tied to ground. The timer resets when 24 V DC is applied to the reset wire. The timer automatically resets when it reaches the final count.

Counter—The counter option counts up or down by converting input pulses into movement of segments along the length of the device based on up to four thresholds that define animations. When the rising edge of a 24 V DC pulse is applied to the counter input wire, the count increases by one. The user can choose whether the counter resets or the count decreases by one when 24 V DC is applied to the control input wire. The counter automatically resets when it reaches the final count.

Audible Control—Use Audible Control to select the settings for the tower light's audible type, feedback, and volume.

Setting	Description
Audible Feedback	Defines the type of audible feedback
Audible Volume	Defines the volume of the audible tone
Audible Type	Defines the type of audible tone played

© Banner Engineering Corp. All rights reserved. www.bannerengineering.com

Installation Instructions

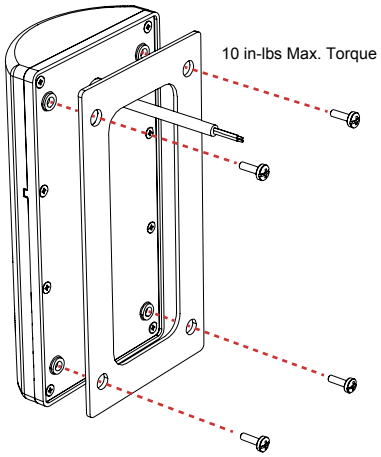

Mounting Surface Thickness	Length of Mounting Screws
≤ 8 mm	12 mm (supplied)
8 mm to 16 mm	20 mm
16 mm to 26 mm	30 mm
26 mm to 36 mm	40 mm
36 mm to 46 mm	50 mm

NOTE: Do not remove housing screws.

Bracket Mounting Instructions

The TLF100 can be mounted with the SMBTLF100F bracket in the following alternative orientations.

Bracket Orientation - Horizontal

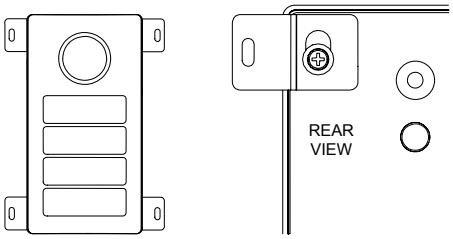

Bracket Orientation - Vertical

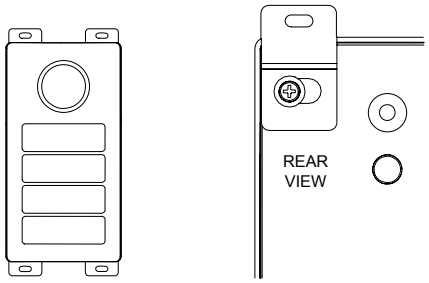

Specifications

Supply Voltage and Current

24 V DC nominal
Typical current per LED segment: 25 mA at 24 V DC
Typical audible current: 24 mA
Maximum device current: 160 mA

Supply Protection Circuitry

Protected against reverse polarity and transient voltages

Input Rating

Leakage Current Immunity: 500 uA
Indicator On/Off Response Time: 250 ms (maximum)
PWM Duty Cycle Range: 0 to 100%
PFM Frequency Range: 100 to 5000 Hz

Connections

150 mm (6 in) PVC-jacketed cable with a 5-pin or 8-pin M12 male quick-disconnect connector, or 2 m (6.5 ft) integral PVC-jacketed cable, depending on model
Models with a quick-disconnect connector require a mating cordset

Construction

Bases, Covers, Light Segment: Polycarbonate

Indicator Characteristics

Color	Dominant Wavelength (nm) or Color Temperature (CCT)	Lumen Output Per Segment (Typical at 25 °C)
Green	526	27
Red	618	15
Yellow	587	11
Blue	467	6
White	5200K	26

Certifications

Banner Engineering BV
Park Lane, Culliganlaan 2F bus 3
1831 Diegem, BELGIUM

Turck Banner LTD Blenheim House
Blenheim Court
Wickford, Essex SS11 8YT
GREAT BRITAIN

c UL us LISTED

Advanced Capabilities

PULSE® PRO I/O

Operating Conditions

–40 °C to +50 °C (–40 °F to +122 °F)
95% at +50 °C maximum relative humidity (non-condensing)

Environmental Rating

IP65, UL Type 4X, and IP69K per ISO 20653

NOTE: Do not spray cable with high-pressure sprayer, or cable damage will result.

Vibration and Mechanical Shock

Vibration: 10 Hz to 55 Hz, 0.5 mm peak-to-peak amplitude per IEC 60068-2-6
Shock: 15G 11 ms duration, half sine wave per IEC 60068-2-27

Audible Alarm

Values shown apply to continuous tone. Frequency and intensity response vary depending on the Audible Tone selected.
Oscillation Frequency: 3.0 kHz ± 250 Hz
Intensity:
Low volume (typical): 84 dB at 1 m
Medium volume (typical): 89 dB at 1 m
High volume (typical): 94 dB at 1 m

Required Overcurrent Protection

WARNING: Electrical connections must be made by qualified personnel in accordance with local and national electrical codes and regulations.

Overcurrent protection is required to be provided by end product application per the supplied table.
Overcurrent protection may be provided with external fusing or via Current Limiting, Class 2 Power Supply.
Supply wiring leads < 24 AWG shall not be spliced.
For additional product support, go to www.bannerengineering.com.

Supply Wiring (AWG)	Required Overcurrent Protection (A)	Supply Wiring (AWG)	Required Overcurrent Protection (A)
20	5.0	26	1.0
22	3.0	28	0.8
24	2.0	30	0.5

FCC Part 15 Class B for Unintentional Radiators

(Part 15.105(b)) This equipment has been tested and found to comply with the limits for a Class B digital device, pursuant to part 15 of the FCC Rules. These limits are designed to provide reasonable protection against harmful interference in a residential installation. This equipment generates, uses, and can radiate radio frequency energy and, if not installed and used in accordance with the instructions, may cause harmful interference to radio communications. However, there is no

© Banner Engineering Corp. All rights reserved. www.bannerengineering.com

guarantee that interference will not occur in a particular installation. If this equipment does cause harmful interference to radio or television reception, which can be determined by turning the equipment off and on, the user is encouraged to try to correct the interference by one or more of the following measures:

- Reorient or relocate the receiving antenna.
- Increase the separation between the equipment and receiver.
- Connect the equipment into an outlet on a circuit different from that to which the receiver is connected.
- Consult the dealer or an experienced radio/TV technician for help.

(Part 15.21) Any changes or modifications not expressly approved by the party responsible for compliance could void the user's authority to operate this equipment.

Industry Canada ICES-003(B)

This device complies with CAN ICES-3 (B)/NMB-3(B). Operation is subject to the following two conditions: 1) This device may not cause harmful interference; and 2) This device must accept any interference received, including interference that may cause undesired operation.

Cet appareil est conforme à la norme NMB-3(B). Le fonctionnement est soumis aux deux conditions suivantes : (1) ce dispositif ne peut pas occasionner d'interférences, et (2) il doit tolérer toute interférence, y compris celles susceptibles de provoquer un fonctionnement non souhaité du dispositif.

Dimensions

All measurements are listed in millimeters [inches], unless noted otherwise. The measurements provided are subject to change.

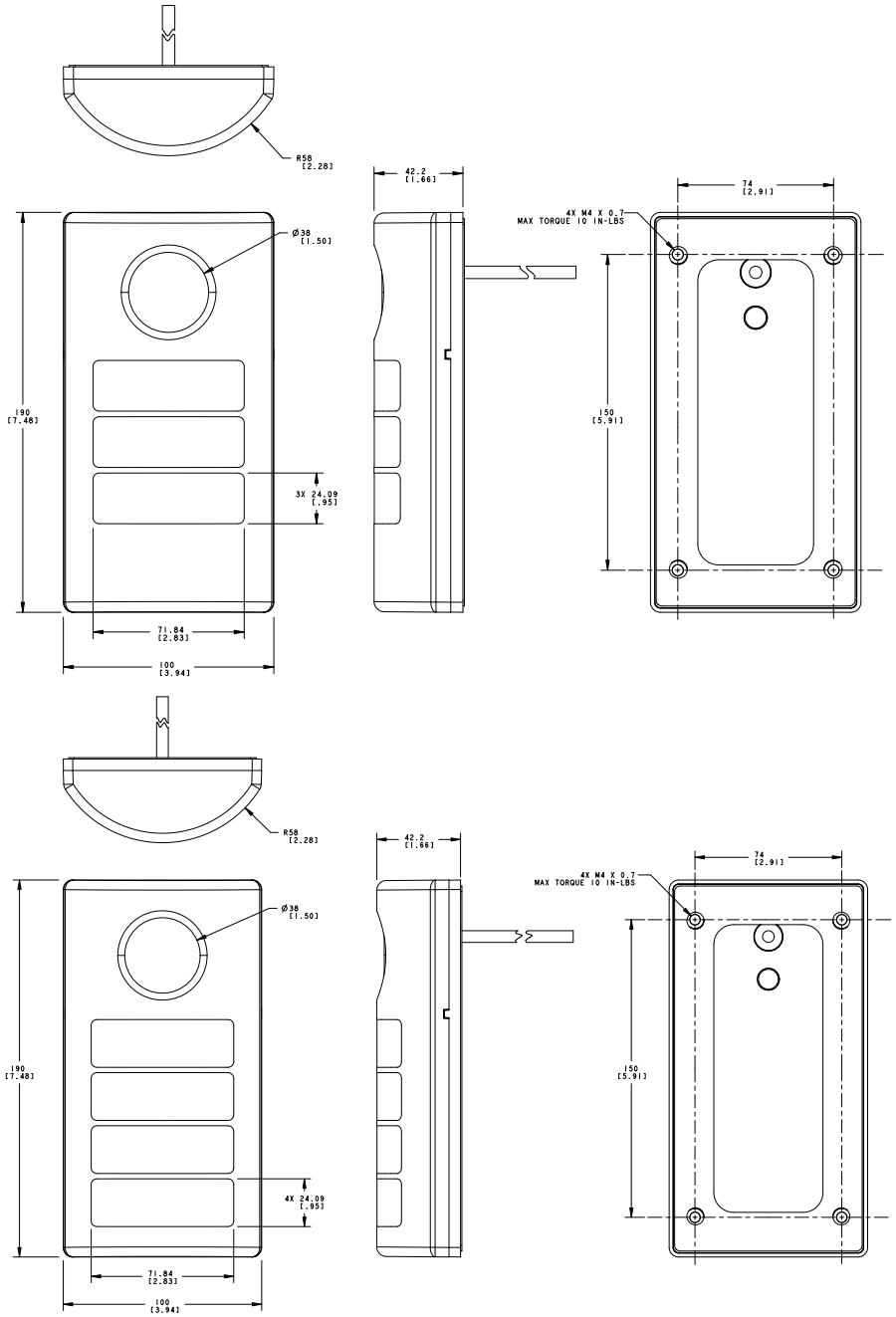

© Banner Engineering Corp. All rights reserved. www.bannerengineering.com

Accessories

Cordsets

5-Pin Single-Ended M12 Female Cordsets				
Model	**Length**	**Style**	**Dimensions**	**Pinout (Female)**
MQDC1-501.5	0.5 m (1.5 ft)	Straight	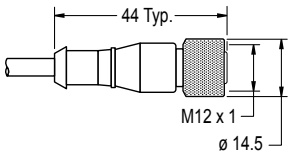	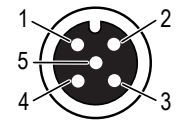 1 = Brown 2 = White 3 = Blue 4 = Black 5 = Gray
MQDC1-503	0.9 m (2.9 ft)			
MQDC1-506	2 m (6.5 ft)			
MQDC1-515	5 m (16.4 ft)			
MQDC1-530	9 m (29.5 ft)			
MQDC1-560	18 m (59 ft)			
MQDC1-5100	31 m (101.7 ft)			
MQDC1-506RA	2 m (6.5 ft)	Right-Angle	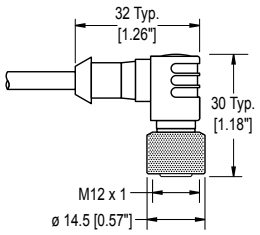	
MQDC1-515RA	5 m (16.4 ft)			
MQDC1-530RA	9 m (29.5 ft)			
MQDC1-560RA	19 m (62.3 ft)			

8-Pin Single-Ended M12 Female Open-Shielded Cordsets				
Model	**Length**	**Style**	**Dimensions**	**Pinout (Female)**
MQDC2S-806	2.04 m (6.7 ft)	Straight	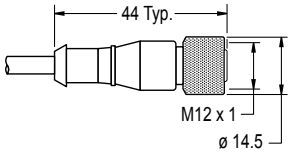	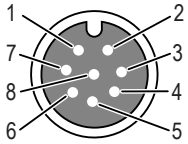 1 = White 2 = Brown 3 = Green 4 = Yellow 5 = Gray 6 = Pink 7 = Blue 8 = Red
MQDC2S-815	5.04 m (16.54 ft)			
MQDC2S-830	10.04 m (32.95 ft)			
MQDC2S-850	16 m (52.49 ft)			
MQDC2S-806RA	2 m (6.56 ft)	Right-Angle	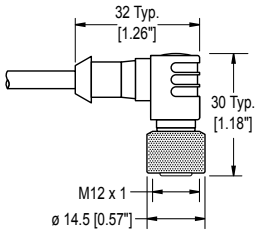	
MQDC2S-815RA	5 m (16.4 ft)			
MQDC2S-830RA	10 m (32.81 ft)			
MQDC2S-850RA	16 m (52.49 ft)			

Splitter Cables for Use with IO-Blocks

5-Pin M12 to 4-Pin M12 Combiner Cordset with Flat Junction			
Model	**Branches (Male)**	**Trunk (Female)**	**Pinout**
CSF-M12F51M12M41	4-pin Quick Disconnect, 2 × 0.31 m (1.02 ft)	5-pin Quick Disconnect, 0.31 m (1.02 ft)	Female  Male 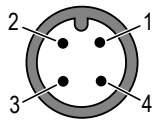 1 = brown (trunk); no connection (branches 1 and 2) 2 = white (trunk); brown (branch 1); gray (branch 2) 3 = blue (trunk; branches 1 and 2) 4 = black (trunk); black (branch 1); white (branch 2) 5 = gray (trunk only)

Continued on page 7

© Banner Engineering Corp. All rights reserved. www.bannerengineering.com

Continued from page 6

5-Pin M12 to 4-Pin M12 Combiner Cordset with Flat Junction

Model	Branches (Male)	Trunk (Female)	Pinout

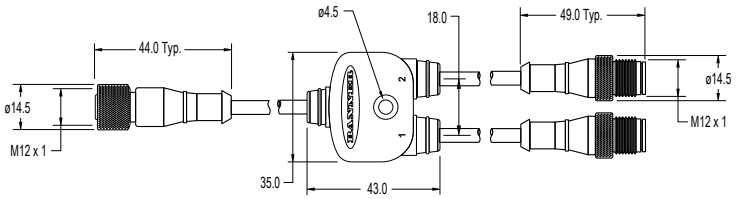

8-Pin M12 Female to 4-Pin M12 Male Combiner Flat Junction Splitter Cordsets

Model	Branches (Male)	Trunk (Female)	Pinout
CSF3A-M12F81M12M41	4-pin M12 Quick Disconnect, 3 × 0.3 m (0.98 ft)	8-pin M12 Quick Disconnect, 0.3 m (0.98 ft)	Female

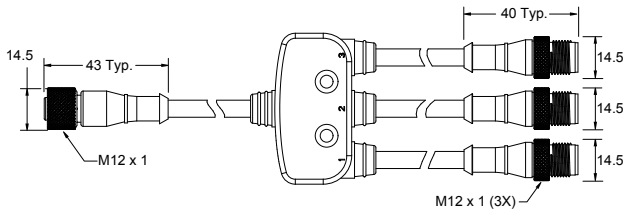

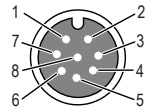

Male

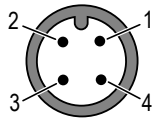

	Trunk	Branch 1	Branch 2	Branch 3
1	White	NC	NC	NC
2	Brown	Brown	Gray	Red
3	Green	Blue	Blue	Blue
4	Yellow	Pink	White	Yellow
5	Gray			
6	Pink			
7	Blue			
8	Red			

Mounting Bracket

All measurements are listed in millimeters [inches], unless noted otherwise. The measurements provided are subject to change.

SMBTLF100F

- Right-angle
- S bracket
- Mounting hardware included
- CAD Files: DXF, PDF, IGS, STP

Hole center spacing: 26.5
Hole Size: A = 16.6 × 9.4, B = 10.5 × 4.5

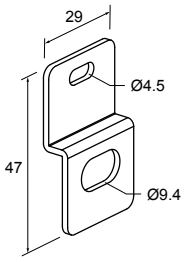

© Banner Engineering Corp. All rights reserved. www.bannerengineering.com

Pro Editor Hardware

PRO-KIT

Includes:
- Pro Converter Cable (MQDC-506-USB)
- Splitter (CSB-M1251FM1251M)
- Power Supply (PSW-24-1)

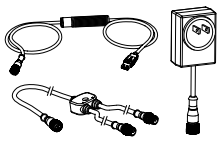

MQDC-506-USB
- Pro Converter Cable
- 1.83 m (6 ft) length 5-pin M12 quick disconnect to Device and USB to PC
- Required for connection to the configuration software

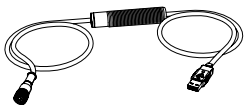

CSB-M1251FM1251M
- 5-pin parallel Y splitter (Male-Male-Female)
- For full Pro Editor preview capability
- Requires external power supply, sold separately

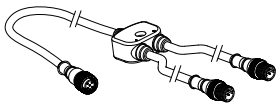

PSW-24-1
- 24 V DC, 1 A power supply
- 2 m (6.5 ft) PVC cable with M12 quick disconnect
- Provides external power with splitter cable, sold separately

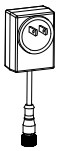

ACC-PRO-CABLE5
- Mating accessory for cabled and terminal models
- 150 mm (6 inch) PVC cable with M12 quick disconnect
- Lever wire nuts included (qty 5)
- Required to connect cabled models and screw terminal models to Pro Converter Cable, sold separately

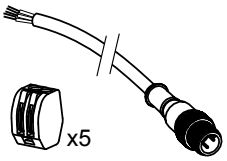

MQDC-801-5M-PRO
- 8-pin to 5-pin double-ended cordset
- 0.31 m (1 ft) PVC cable with M12 quick disconnects
- Required to connect 8-pin Pro Series-enabled devices to Pro Converter Cable (MQDC-506-USB), sold separately



Banner Engineering Corp Limited Warranty

Banner Engineering Corp. warrants its products to be free from defects in material and workmanship for one year following the date of shipment. Banner Engineering Corp. will repair or replace, free of charge, any product of its manufacture which, at the time it is returned to the factory, is found to have been defective during the warranty period. This warranty does not cover damage or liability for misuse, abuse, or the improper application or installation of the Banner product.

THIS LIMITED WARRANTY IS EXCLUSIVE AND IN LIEU OF ALL OTHER WARRANTIES WHETHER EXPRESS OR IMPLIED (INCLUDING, WITHOUT LIMITATION, ANY WARRANTY OF MERCHANTABILITY OR FITNESS FOR A PARTICULAR PURPOSE), AND WHETHER ARISING UNDER COURSE OF PERFORMANCE, COURSE OF DEALING OR TRADE USAGE.

This Warranty is exclusive and limited to repair or, at the discretion of Banner Engineering Corp., replacement. **IN NO EVENT SHALL BANNER ENGINEERING CORP. BE LIABLE TO BUYER OR ANY OTHER PERSON OR ENTITY FOR ANY EXTRA COSTS, EXPENSES, LOSSES, LOSS OF PROFITS, OR ANY INCIDENTAL, CONSEQUENTIAL OR SPECIAL DAMAGES RESULTING FROM ANY PRODUCT DEFECT OR FROM THE USE OR INABILITY TO USE THE PRODUCT, WHETHER ARISING IN CONTRACT OR WARRANTY, STATUTE, TORT, STRICT LIABILITY, NEGLIGENCE, OR OTHERWISE.**

Banner Engineering Corp. reserves the right to change, modify or improve the design of the product without assuming any obligations or liabilities relating to any product previously manufactured by Banner Engineering Corp. Any misuse, abuse, or improper application or installation of this product or use of the product for personal protection applications when the product is identified as not intended for such purposes will void the product warranty. Any modifications to this product without prior express approval by Banner Engineering Corp will void the product warranties. All specifications published in this document are subject to change; Banner reserves the right to modify product specifications or update documentation at any time. Specifications and product information in English supersede that which is provided in any other language. For the most recent version of any documentation, refer to: www.bannerengineering.com.

For patent information, see www.bannerengineering.com/patents.

© Banner Engineering Corp. All rights reserved. www.bannerengineering.com