MODEL NO.	"L"	P/N
PIL46UHF	2000 [79]	56092
PIL430UHF	10000 [394]	26706
PIL460UHF	20000 [787]	26707

*SUFFIX 'HF' DENOTES HIGH-FLEX FIBER CABLE - VERY SMALL BEND RADIUS PERMISSIBLE BEFORE TRANSMISSION LOSS.

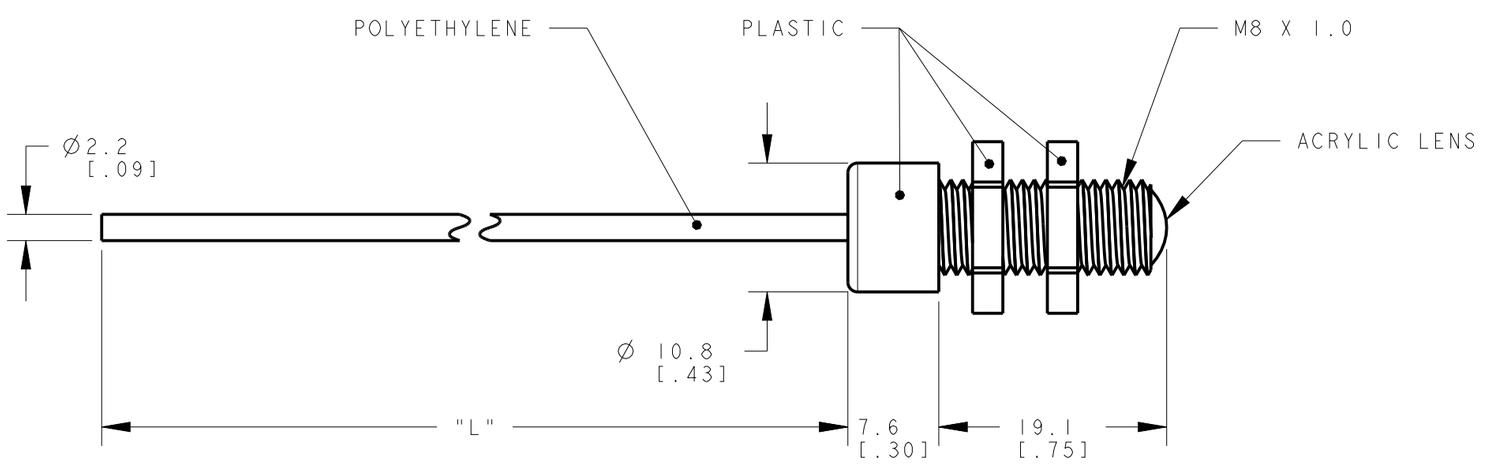

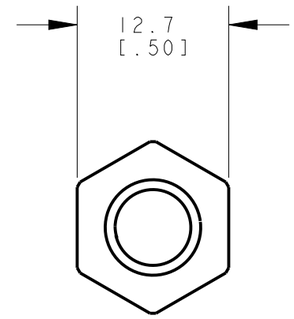

NOTES:
1. ALL DIMENSIONS ARE MILLIMETERS [INCHES] UNLESS OTHERWISE NOTED.
2. REFER TO "www.bannerengineering.com" FOR ADDITIONAL DATA AND SPECIFICATIONS.

This drawing is the property of BANNER ENGINEERING CORP. Any use or reproduction, in any form, without prior written permission of Banner is prohibited.
© 2015 Banner Engineering Corp.

THIRD ANGLE PROJECTION

BANNER ENGINEERING CORP.
www.bannerengineering.com

TITLE
PIL4 HIGH FLEX UNTERMINATED

SIZE	DRAWING NO.	REV.
B	193400	A
SCALE 2:1	SHEET 1 OF 1	

CREO

ПРОМЭЛЕКТРОНИКА/ sales@prom-elec.com