Q240RA-AF2L R-GAGE® Series Sensor

Datasheet

Radar-based dual-zone narrow-beam sensors for detecting moving and stationary targets

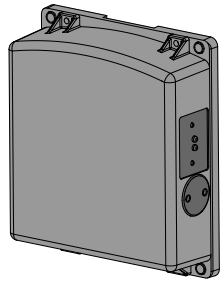

- FMCW radar detects moving and stationary objects
- Narrow 11° × 13° beam pattern
- Two independent, adjustable sensing zones detect objects up to 100 m (328.1 ft)
- Easy setup and configuration of range, sensitivity, and output with simple DIP switches
- Sensing functions are unaffected by wind, falling rain or snow, fog, humidity, air temperatures, or light
- Sensor operates in Industrial, Scientific, and Medical (ISM) telecommunication band
- Rugged IP67 housing withstands harsh environments

WARNING:

- **Do not use this device for personnel protection**
- Using this device for personnel protection could result in serious injury or death.
- This device does not include the self-checking redundant circuitry necessary to allow its use in personnel safety applications. A device failure or malfunction can cause either an energized (on) or de-energized (off) output condition.

Models

Model	Sensing Range	Connection	Supply Voltage	Telecom Approval	Output
Q240RA-US-AF2LQ	Two independent sensing zones; 1 m to 100 m (3.3 ft to 328 ft)	5-pin M12 quick disconnect	12 V DC to 30 V DC	US, Canada, Mexico, Taiwan, Brazil	DIP-switch-selectable NPN or PNP; N.O. or N.C.
Q240RA-EU-AF2LQ				Europe, UK, Australia, New Zealand, US, Brazil, Japan, Korea	
Q240RA-CN-AF2LQ				China, US	

Q240RA-AF2L Overview

The R-GAGE sensor emits a well-defined beam of high-frequency radio waves from an internal antenna. Some of this emitted energy is reflected back to the receiving antenna. Signal processing electronics determine the distance from the sensor to the object based on the time delay of the return signal. The sensor can be configured to two independent sensing zones.

The two sensing zones are factory pre-set to default distances; they can be reconfigured for different distances using the DIP switches on the side of the sensor. The sensor is plug-in ready for immediate operation.

The sensitivity is precalibrated at the factory, assuming that the sensing field will be clear of obstacles. The sensitivity can be adjusted using the DIP switches.

© Banner Engineering Corp.

ПРОМЭЛЕКТРОНИКА/ sales@prom-elec.com

R-GAGE features

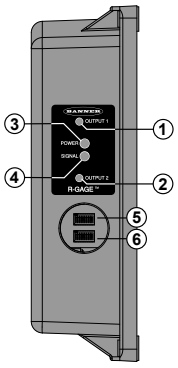

1. Output LEDs: Yellow (output 1 energized); Red (configuration)
2. Output LEDs: Yellow (output 2 energized); Red (configuration)
3. Power LED: Green (power ON)
4. Signal Strength LED: Red (flashes in proportion to the signal strength)
5. DIP switch row A
6. DIP switch row B

Access the DIP switches behind the threaded cap on the side of the sensor.

R-GAGE setpoint distances

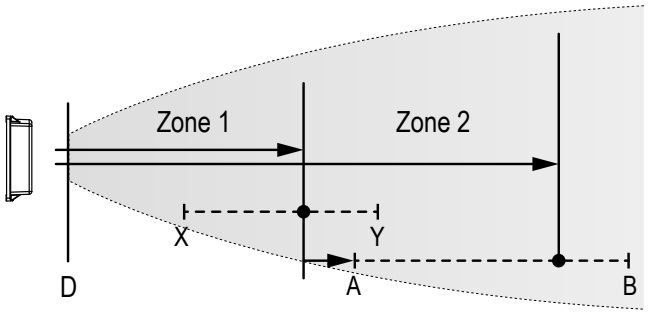

		Distance
X	Minimum Zone 1 setpoint distance	4 m (13.1 ft)
Y	Maximum Zone 1 setpoint distance	60 m (197 ft)
A	Minimum Zone 2 (offset from Zone 1: 5 m to 40 m)	9 m (29.5 ft)
B	Maximum Zone 2 (offset from Zone 1: 5 m to 40 m)	100 m (328 ft)
D	Dead Zone[1]	

Wiring

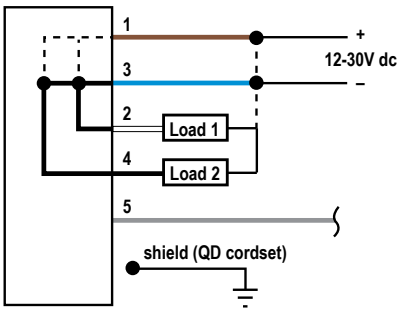

Wiring Key:

1. Brown
2. White
3. Blue
4. Black
5. Gray (Do not connect)

Banner recommends that the shield wire (QD cordsets only) be connected to earth ground or DC common. Shielded cordsets are recommended for all QD models.

Sensor Configuration

Configure the sensor using the DIP switches. Use the included spanner to open the screw-off cover and access the DIP switches.

IMPORTANT: Tighten the DIP switch cover a full quarter turn after contact to maintain the watertight seal.

[1] Typical dead zone: 0.4 m (1.3 ft) for moving and 1.0 m (3.3 ft) for stationary targets, but varies with target reflectivity.

© Banner Engineering Corp. All rights reserved.

DIP Switch Functions

DIP switch 1 is on the left and DIP switch 8 is on the right.

Switches	Function
A1, A2, A3, A4	Zone 1 Distance (detects objects from sensor face to this point)
A5, A6, A7	Zone 2 Distance, Offset from Zone 1
A8	Polarity
B1, B2, B3	Sensitivity (higher sensitivity sees weaker objects and has a larger beam pattern)
B4, B5, B6	Response Speed
B7	Normally Open/Normally Closed output functionality
B8	Not Used

Distance Settings

* Default settings

Zone 1 Distance				
A1	A2	A3	A4	Distance
0	0	0	0	4 m (13.1 ft)
0	0	0	1	6 m (19.7 ft)
0	0	1	0	8 m (26.2 ft)
0	0	1	1	10 m (32.8 ft)
0	1	0	0	12 m (39.4 ft)
0	1	0	1	14 m (45.9 ft)
0	1	1	0	16 m (52.5 ft)
0*	1*	1*	1*	20 m (65.6 ft)
1	0	0	0	25 m (82.0 ft)
1	0	0	1	30 m (98.4 ft)
1	0	1	0	35 m (114.8 ft)
1	0	1	1	40 m (131.2 ft)
1	1	0	0	45 m (147.6 ft)
1	1	0	1	50 m (164.0 ft)
1	1	1	0	55 m (180.4 ft)
1	1	1	1	60 m (196.9 ft)

Zone 2 Distance Offset from Zone 1			
A5	A6	A7	Offset
0	0	0	5 m (16.4 ft)
0	0	1	8 m (26.2 ft)
0	1	0	10 m (32.8 ft)
0	1	1	15 m (49.2 ft)
1*	0*	0*	20 m (65.6 ft)
1	0	1	25 m (82.0 ft)
1	1	0	30 m (98.4 ft)
1	1	1	40 m (131.2 ft)

The highest sensitivity is achieved only if the sensing distance is 72 m (236.2 ft) or less.

Sensitivity Selection

* Default settings for US and CN models

**Default settings for EU models

© Banner Engineering Corp. All rights reserved.

B1	B2	B3	Sensitivity
0	0	0	8 (Highest)
0	0	1	7...
0	1	0	6 (High)
0**	1**	1**	5...
1*	0*	0*	4 (Medium)
1	0	1	3...
1	1	0	2 (Low)
1	1	1	1 (Lowest)

Output Configuration

* Default settings

A8	NPN/PNP	B7	Normally Open/Closed
0 *	NPN	0 *	Normally open
1	PNP	1	Normally closed

Response Speed

* Default settings

B4	B5	B6	ON (ms)	OFF (ms)	Total (ms)
0	0	0	15	15	30
0	0	1	30	70	100
0	1	0	30	120	150
0*	1*	1*	50	300	350
1	0	0	50	600	650
1	0	1	30	1000	1030
1	1	0	120	600	720
1	1	1	120	6000	6120

Specifications

Range
The sensor is able to detect a proper object (see Detectable Objects) from 1 to 100 m (3.3 to 328 ft), depending on target

Detectable Objects
Objects containing metal, water, or similar high-dielectric materials

Operating Principle
Frequency modulated continuous-wave (FMCW) radar

Operating Frequency
US Models: 24.075–24.175 GHz, ISM Band
EU, CN Models: 24.050–24.250 GHz, ISM Band

Maximum Output Power
US, CN Models: ERP: 3.3 mW, 5 dBm, EIRP: 358 mW, 25.5 dBm
EU Models: ERP: 0.9 mW, -0.5 dBm, EIRP: 100 mW, 20 dBm

Supply Voltage
12 V DC to 30 V DC, less than 100 mA, exclusive of load

Supply Protection Circuitry
Protected against reverse polarity and transient overvoltages

Delay at Power-up
Less than 2 seconds

Output Configuration
DIP switch A8 selects Dual NPN (default) or PNP; DIP switch B7 selects N.O. (default) or N.C. operation; 150mA each
- **Zone 1 output:** white wire
- **Zone 2 output:** black wire

Output Protection
Protected against short circuit conditions

Response Time
DIP-switch-configurable ON/OFF response time

Vibration and Mechanical Shock
Vibration: 10 Hz to 55 Hz, 0.5 mm peak-to-peak amplitude per IEC 60068-2-6
Shock: 30G 11 ms duration, half sine wave per IEC 60068-2-27

Indicators
Power LED: Green (power ON)
Signal Strength LED: Red, flashes in proportion to signal strength. Steady on at 4x excess gain. Only indicates signal amplitude, not target distance.
Output LEDs: Yellow (output energized) / Red (configuration)
See "Q240RA-AF2L Overview " on page 1

© Banner Engineering Corp. All rights reserved.

Adjustments
DIP-switch-configurable sensing distance, sensitivity, response time, and output configuration

Construction
Housing: Polycarbonate
Lightpipes: Acrylic
Access Cap: Polyester

Operating Temperature
–40 °C to +65 °C (–40 °F to +149 °F)

Environmental Rating
IP67

Connections
Integral M12 quick disconnect fitting. Quick disconnect models require a mating cordset

Beam Angles
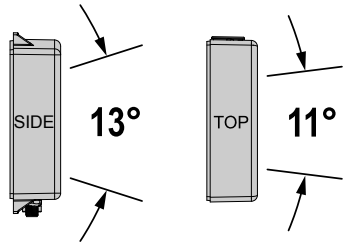

Certifications
Other certifications pending
FCC ID: UE3Q240RA
IC: 7044A-Q240RA
CMIIT Category G
RSS-210
ETSI/EN 300 440

Required Overcurrent Protection

WARNING: Electrical connections must be made by qualified personnel in accordance with local and national electrical codes and regulations.

Overcurrent protection is required to be provided by end product application per the supplied table.
Overcurrent protection may be provided with external fusing or via Current Limiting, Class 2 Power Supply.
Supply wiring leads < 24 AWG shall not be spliced.
For additional product support, go to www.bannerengineering.com.

Supply Wiring (AWG)	Required Overcurrent Protection (A)	Supply Wiring (AWG)	Required Overcurrent Protection (A)
20	5.0	26	1.0
22	3.0	28	0.8
24	1.0	30	0.5

IND. CONT. EQ. E224071 LISTED

NOM NYCE

Complies with IMDA Standards N4801-23

CCAK18LP0620T5

MSIP-CRM-BE2-Q240R

R 209-J00355

CE

Banner Engineering BV Park Lane | Culliganlaan 2F bus 3 | 1831 Diegem, BELGIUM

UKCA

Turck Banner LTD Blenheim House | Blenheim Court | Wickford, Essex SS11 8YT | Great Britain

ANATEL Category II

ANATEL
Agência Nacional de Telecomunicações

15380-20-04042

Este equipamento não tem direito à proteção contra interferência prejudicial e não pode causar interferência em sistemas devidamente autorizados.

Para maiores informações, consulte o site da ANATEL www.gov.br/anatel/pt-br/

SRD24-IO3B24100.2TR0.1 South Korea Class A Certification

A 급 기기 (업무용 방송통신기자재)

이 기기는 업무용 (A 급) 으로 전자파적합기기로
서 판매자 또는 사용자는 이 점을 주의하시기

© Banner Engineering Corp. All rights reserved.

바라며 , 가정외의 지역에서 사용하는 것을 목
적으로 합니다 .

FCC Part 15 Class A

This equipment has been tested and found to comply with the limits for a Class A digital device, pursuant to part 15 of the FCC Rules. These limits are designed to provide reasonable protection against harmful interference when the equipment is operated in a commercial environment. This equipment generates, uses, and can radiate radio frequency energy and, if not installed and used in accordance with the instruction manual, may cause harmful interference to radio communications. Operation of this equipment in a residential area is likely to cause harmful interference in which case the user will be required to correct the interference at his own expense.

Industry Canada Statement for Intentional Radiators

This device contains licence-exempt transmitters(s)/receiver(s) that comply with Innovation, Science and Economic Development Canada's licence-exempt RSS(s). Operation is subject to the following two conditions:

1. This device may not cause interference.
2. This device must accept any interference, including interference that may cause undesired operation of the device.

Cet appareil contient des émetteurs/récepteurs exemptés de licence conformes à la norme Innovation, Sciences, et Développement économique Canada. L'exploitation est autorisée aux deux conditions suivantes:

1. L'appareil ne doit pas produire de brouillage.
2. L'utilisateur de l'appareil doit accepter tout brouillage radioélectrique subi, même si le brouillage est susceptible d'en compromettre le fonctionnement.

NCC for Q240 Models

警語低功率電波輻射性電機管理辦法第十二條經型式認證合格之低功率射頻電機，非經許可，公司、商號或使用者均不得擅自變更頻率、加大功率或變更原設計之特性及功能。第十四條低功率射頻電機之使用不得影響飛航安全及干擾合法通信；經發現有干擾現象時，應立即停用，並改善至無干擾時方得繼續使用。前項合法通信，指依電信規定作業之無線電信。低功率射頻電機須忍受合法通信或工業、科學及醫療用電波輻射性電機設備之干擾 。

Notas Adicionales

Información México: La operación de este equipo está sujeta a las siguientes dos condiciones: 1) es posible que este equipo o dispositivo no cause interferencia perjudicial y 2) este equipo debe aceptar cualquier interferencia, incluyendo la que pueda causar su operación no deseada.

Banner es una marca registrada de Banner Engineering Corp.

Q240RA Dimensions

All measurements are listed in millimeters [inches], unless noted otherwise.

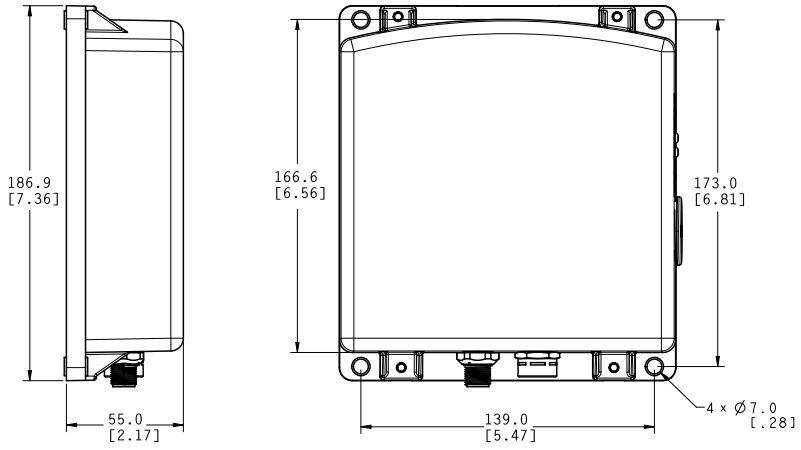

© Banner Engineering Corp. All rights reserved.

Beam Pattern—US and CN Models

Typical Beam Pattern (with BRTR-CC20E Radar Target, Radar Cross Section = 50 m^2)

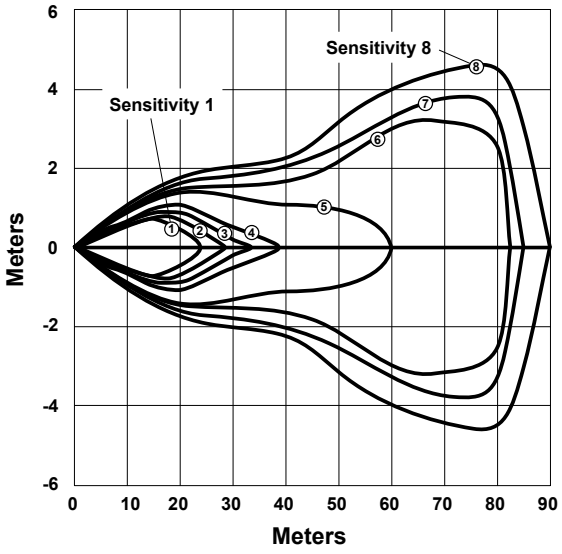

1–8: Indicates sensitivity level

Typical Beam Pattern (with 4 different targets)

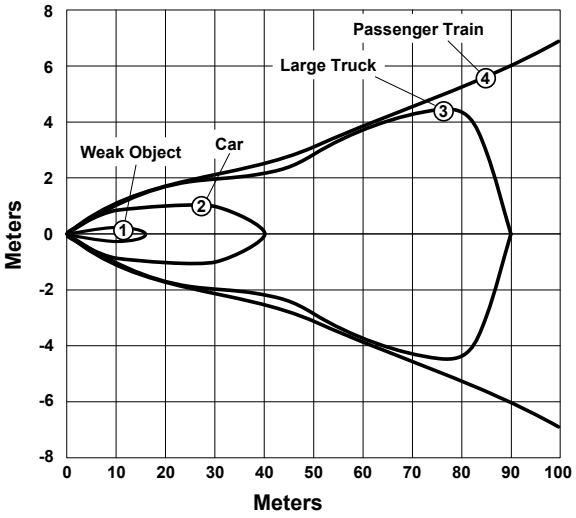

At sensitivity level 8

1: Weak Object (Radar cross section = 0.25 m^2)
2: Car (Radar cross section = 3 m^2)
3: Large Truck (Radar cross section = 50 m^2)
4: Passenger Train (Radar cross section = 300 m^2)

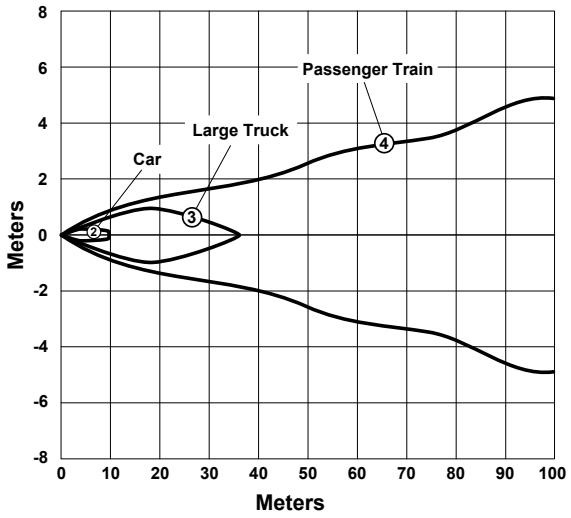

At sensitivity level 4

NOTE: The Target 1 curve is not available due to trace data on a weak object.

© Banner Engineering Corp. All rights reserved.

Beam Pattern—EU Models

Typical Beam Pattern (with BRTR-CC20E Radar Target, Radar Cross Section = 50 m^2)

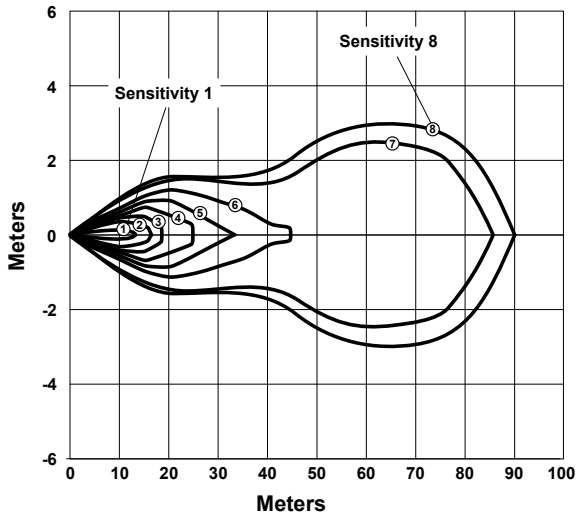

1–8: Indicates sensitivity level

Typical Beam Pattern (with 4 different targets)

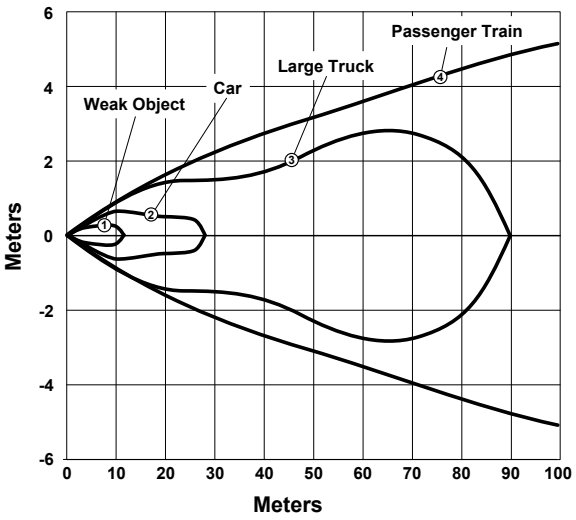

At sensitivity level 8

1: Weak Object (Radar cross section = 0.25 m^2)
2: Car (Radar cross section = 3 m^2)
3: Large Truck (Radar cross section = 50 m^2)
4: Passenger Train (Radar cross section = 300 m^2)

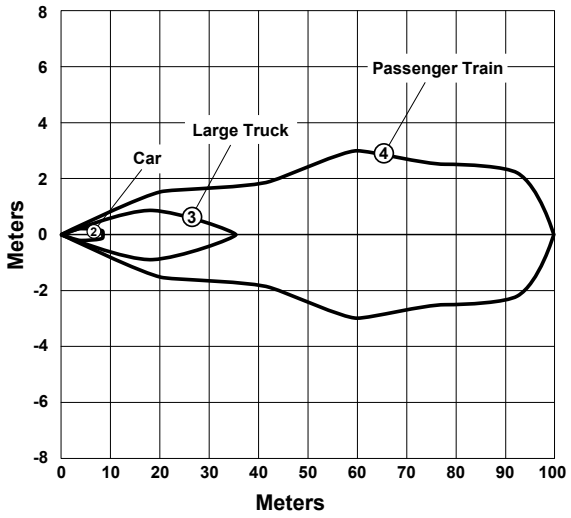

At sensitivity level 5

NOTE: The Target 1 curve is not available due to trace data on a weak object.

Windows

The R-GAGE sensor can be placed behind a glass or a plastic window, but the configuration must be tested and the distance from the sensor to the window must be determined and controlled prior to installation. There is typically a 20% signal reduction when the sensor is placed behind a window.

Polycarbonate at 4 mm thickness performs well in most situations, but the performance depends on filler materials. Thinner (1 to 3 mm) windows have high reflection. The amount of reflection depends on the material, thickness, and distance from the sensor to the window.

Locate the sensor in a position of minimum reflection from the window, which will repeat every 6.1 mm of distance between the sensor and the window. The positions of maximum reflection from the window repeat between the minimums, and decrease in effect until the window is approximately 150 mm (5.9 in) away. Consult the factory for pre-tested window materials which can be used at any distance without issue.

© Banner Engineering Corp. All rights reserved.

Additionally, the face of the window should be protected from flowing water and ice by use of a flow diverter or hood directly above the window. Falling rain or snow in the air in front of the window, light water mist, or small beads on the face of the window are typically not an issue. However, a thick, continuous surface of water or ice directly on the face of the window can be detected as a dielectric boundary.

The Q240WS is a clip-on hydrophobic weather shield accessory specially designed to meet these requirements. This is recommended for outdoor use, especially where snow or rain is likely to accumulate on the front surface of the sensor.

Accessories

Quick Disconnect (QD) Cordsets

5-Pin Threaded M12 Cordsets with Shield—Single Ended

Model	Length	Style	Dimensions	Pinout (Female)
MQDEC2-506	2 m (6.56 ft)	Straight	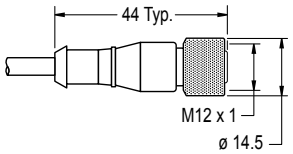	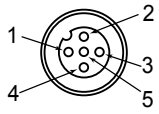 1 = Brown 2 = White 3 = Blue 4 = Black 5 = Gray
MQDEC2-515	5 m (16.4 ft)			
MQDEC2-530	9 m (29.5 ft)			
MQDEC2-550	15 m (49.2 ft)			
MQDEC2-575	23 m (75.44 ft)			
MQDEC2-5100	30.5 m (100 ft)			
MQDEC2-506RA	2 m (6.56 ft)	Right-Angle	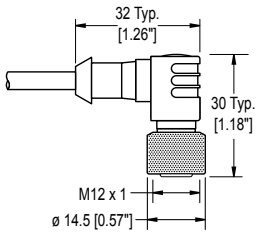	
MQDEC2-515RA	5 m (16.4 ft)			
MQDEC2-530RA	9 m (29.5 ft)			
MQDEC2-550RA	15 m (49.2 ft)			
MQDEC2-575RA	23 m (75.44 ft)			
MQDEC2-5100RA	31 m (101.68 ft)			

Pin 5 is not used.

Brackets and Other Accessories

SMBQ240SS2
- Add-on accessory to be used in conjunction with SMBQ240SS1
- Provides ± 20° of tilt in second axis for maximum control of sensor alignment
- 12-gauge stainless steel

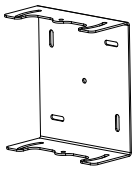

Q240WS Weather Shield
- Coated to help repel water and maximize signal strength
- Snap-on cover for easy application and replacement

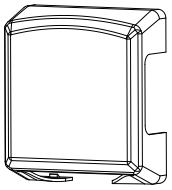

SMBQ240SS1
- Sensor mounting plate and pivoting bracket
- Provides ± 20° of tilt in one axis for enhanced sensor alignment
- 12-gauge stainless steel
- Sensor can mount on bracket horizontally or vertically

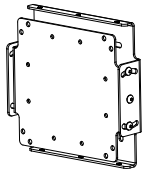

© Banner Engineering Corp. All rights reserved.

Q240RA R-GAGE sensor shown with all three accessories installed.

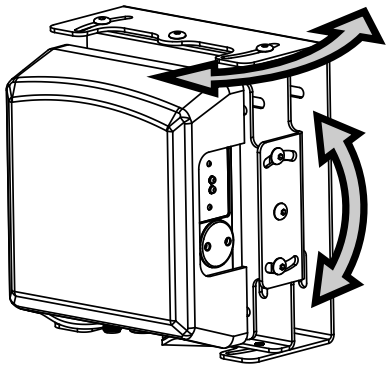

Banner Engineering Corp. Limited Warranty

Banner Engineering Corp. warrants its products to be free from defects in material and workmanship for one year following the date of shipment. Banner Engineering Corp. will repair or replace, free of charge, any product of its manufacture which, at the time it is returned to the factory, is found to have been defective during the warranty period. This warranty does not cover damage or liability for misuse, abuse, or the improper application or installation of the Banner product.

THIS LIMITED WARRANTY IS EXCLUSIVE AND IN LIEU OF ALL OTHER WARRANTIES WHETHER EXPRESS OR IMPLIED (INCLUDING, WITHOUT LIMITATION, ANY WARRANTY OF MERCHANTABILITY OR FITNESS FOR A PARTICULAR PURPOSE), AND WHETHER ARISING UNDER COURSE OF PERFORMANCE, COURSE OF DEALING OR TRADE USAGE.

This Warranty is exclusive and limited to repair or, at the discretion of Banner Engineering Corp., replacement. **IN NO EVENT SHALL BANNER ENGINEERING CORP. BE LIABLE TO BUYER OR ANY OTHER PERSON OR ENTITY FOR ANY EXTRA COSTS, EXPENSES, LOSSES, LOSS OF PROFITS, OR ANY INCIDENTAL, CONSEQUENTIAL OR SPECIAL DAMAGES RESULTING FROM ANY PRODUCT DEFECT OR FROM THE USE OR INABILITY TO USE THE PRODUCT, WHETHER ARISING IN CONTRACT OR WARRANTY, STATUTE, TORT, STRICT LIABILITY, NEGLIGENCE, OR OTHERWISE.**

Banner Engineering Corp. reserves the right to change, modify or improve the design of the product without assuming any obligations or liabilities relating to any product previously manufactured by Banner Engineering Corp. Any misuse, abuse, or improper application or installation of this product or use of the product for personal protection applications when the product is identified as not intended for such purposes will void the product warranty. Any modifications to this product without prior express approval by Banner Engineering Corp will void the product warranties. All specifications published in this document are subject to change; Banner reserves the right to modify product specifications or update documentation at any time. Specifications and product information in English supersede that which is provided in any other language. For the most recent version of any documentation, refer to: www.bannerengineering.com.

For patent information, see www.bannerengineering.com/patents.

Mexican Importer

Banner Engineering de Mèxico, S. de R.L. de C.V. | David Alfaro Siqueiros 103 Piso 2 Valle oriente | San Pedro Garza Garcia Nuevo Leòn, C. P. 66269

81 8363.2714

Document title: R-GAGE® Q240RA-AF2L Series Radar Sensor
Part number: 198175
Revision: B
Original Instructions
© Banner Engineering Corp. All rights reserved.

198175

© Banner Engineering Corp. All rights reserved.