Features

High-Intensity LED Ring Light for use with PresencePLUS® and other Vision Systems



- Compact ring light for PresencePLUS® and other Vision Systems
- Four extremely bright LEDs for illumination of targets from 0.15 meters to beyond 2 meters (0.49 feet to 6.56 feet)
- Continuous or strobed operation
- Fixed or adjustable intensity, depending on model
- Maintenance-free, rugged construction
- Evenly and intensely illuminates a 610 millimeters (24 inches) diameter at 1 meter (3.28 feet)

Models

Model[1]	LED Color	Bracket	Cable
LEDRR70XD4-XQ	Red, 625 nm	Optional bracket available (see Brackets)	150 mm (6 in) cable with threaded 5-pin M12 connector[2]
LEDWR70XD4-XQ	White, 5500 K		
LEDBR70XD4-XQ	Blue, 470 nm		
LEDGR70XD4-XQ	Green, 530 nm		
LEDIR70XD4-XQ	Infrared, 850 nm		
LEDRR70XD4-XM	Red, 625 nm	Built-in P4 bracket (see Dimensions)	300 mm (12 in) cable with threaded 3-pin M8 connector[3]
LEDWR70XD4-XM	White, 5500 K		
LEDBR70XD4-XM	Blue, 470 nm		
LEDGR70XD4-XM	Green, 530 nm		
LEDIR70XD4-XM	Infrared, 850 nm		

Wiring

Pinouts for Mating Cordset

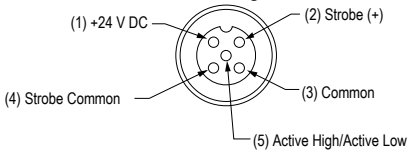

Pinouts of the original 4-pin connector is the same as above, but without the center pin (gray wire).

Wire Purpose	Cable Wire Color[4]	Continuous On Mode	Strobed Mode		*Presence*Plus Pro Controller Terminal Block
Power Wires	**Brown (1)**	+24 V DC	+24 V DC		Pin 01
	Blue (3)	common	common		Pin 02
Strobe Polarity Control	**Gray (5)**	open	**Active Low:** open		Pin 02
			Active High: connect to common (Blue wire)		
Strobe Voltage Wires	**White (2)**	open	0 V DC = ON (Active Low)	+5 V DC to 24 V DC = OFF (Active Low)	Pin 04
			0 V DC = OFF (Active High)	+5 V DC to 24 V DC = ON (Active High)	
	Black (4)	open	Strobe common		Pin 02

(1) For models with controllable intensity, add "**P**" to the model number (for example, **LEDRR70XD4-PQ**).
(2) Requires an M12 cordset.
(3) Connects directly to the P4 sensor.
(4) For Banner-supplied wire.

Original Instructions
04-Nov-25

© Banner Engineering Corp. All rights reserved.
www.bannerengineering.com

134757
p/n: 134757 Rev. G

ПРОМЭЛЕКТРОНИКА/ sales@prom-elec.com

NOTE: To meet CE certification requirements, the light needs to be connected to earth ground.

Light Intensity Adjustment

Turn the 270° intensity potentiometer with a small flat-blade screwdriver to adjust the light's intensity.

1. Apply power to the light and turn the potentiometer all the way clockwise for maximum intensity.
2. If the object to be sensed is too bright at maximum intensity, turn the potentiometer counterclockwise, a little at a time, testing with the target object, until the correct brightness is achieved.

Specifications

Light Source

Four high-intensity LEDs; see Models table for wavelengths

Illumination

610 mm (24 in) diameter usable light pattern at 1 m (3.28 ft)

Strobe

Optically isolated

Supply Voltage and Current

Operating Voltage: 24 V DC ±10%

Strobe Voltage: 5 V DC to 24 V DC at 15 mA maximum

Current Draw at Full Intensity: 350 mA maximum

Built-in constant current regulator for LEDs

Potentiometer controls variable intensity for "P" models

Construction

Enclosure rating: IP50

Housing: aluminum, black anodized

Window: acrylic, clear with frosted diffusing surface on the inside

Bracket: aluminum, black anodized. Attaches ring light directly to *Presence*PLUS P4 with two included M4×14 screws

Useful Life

50,000 hours (LED ON time). When operated within specifications, output will decrease less than 30% after 50,000 hours

Operating Conditions

Temperature: 0 °C to +50 °C (+32 °F to +122 °F)

Humidity: 90% maximum relative humidity (non-condensing)

Dimensions

All measurements are listed in millimeters [inches], unless noted otherwise. The measurements provided are subject to change.

Q Models

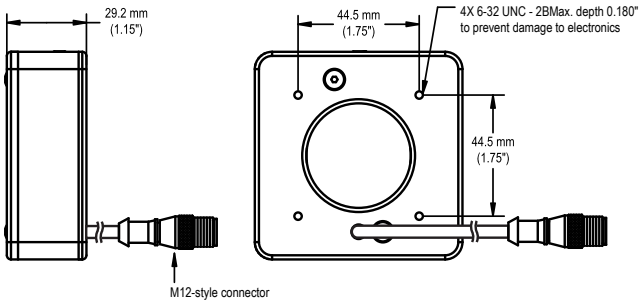

M Models

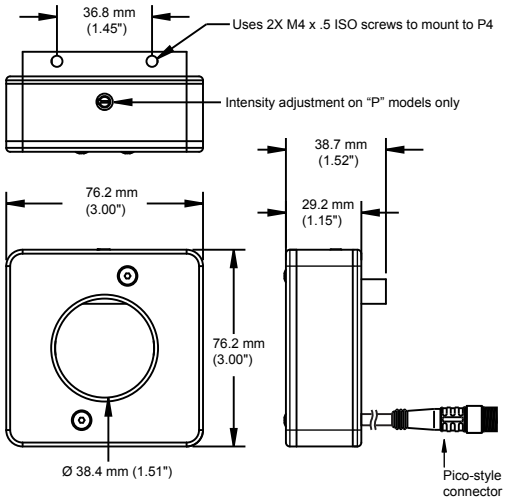

© Banner Engineering Corp. All rights reserved.
www.bannerengineering.com

Accessories

Cordsets

5-Pin Single-Ended M12 Female Cordsets				
Model	**Length**	**Style**	**Dimensions**	**Pinout (Female)**
MQDC20-506	2 m (6.56 ft)	Straight	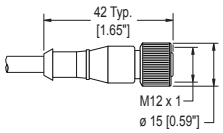	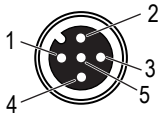 1 = Brown 2 = White 3 = Blue 4 = Black 5 = Gray
MQDC20-515	5 m (16.4 ft)			
MQDC20-530	9 m (29.5 ft)			

Brackets

SMBPPRHI • Black zinc plated cold rolled steel bracket • Mounts directly to Presence*PLUS* Pro sensor • Includes: 2 – 6-32 screws (socket drive, button head) 4 – M3 screws (socket drive, cap head)	

Banner Engineering Corp Limited Warranty

Banner Engineering Corp. warrants its products to be free from defects in material and workmanship for one year following the date of shipment. Banner Engineering Corp. will repair or replace, free of charge, any product of its manufacture which, at the time it is returned to the factory, is found to have been defective during the warranty period. This warranty does not cover damage or liability for misuse, abuse, or the improper application or installation of the Banner product.

THIS LIMITED WARRANTY IS EXCLUSIVE AND IN LIEU OF ALL OTHER WARRANTIES WHETHER EXPRESS OR IMPLIED (INCLUDING, WITHOUT LIMITATION, ANY WARRANTY OF MERCHANTABILITY OR FITNESS FOR A PARTICULAR PURPOSE), AND WHETHER ARISING UNDER COURSE OF PERFORMANCE, COURSE OF DEALING OR TRADE USAGE.

This Warranty is exclusive and limited to repair or, at the discretion of Banner Engineering Corp., replacement. **IN NO EVENT SHALL BANNER ENGINEERING CORP. BE LIABLE TO BUYER OR ANY OTHER PERSON OR ENTITY FOR ANY EXTRA COSTS, EXPENSES, LOSSES, LOSS OF PROFITS, OR ANY INCIDENTAL, CONSEQUENTIAL OR SPECIAL DAMAGES RESULTING FROM ANY PRODUCT DEFECT OR FROM THE USE OR INABILITY TO USE THE PRODUCT, WHETHER ARISING IN CONTRACT OR WARRANTY, STATUTE, TORT, STRICT LIABILITY, NEGLIGENCE, OR OTHERWISE.**

Banner Engineering Corp. reserves the right to change, modify or improve the design of the product without assuming any obligations or liabilities relating to any product previously manufactured by Banner Engineering Corp. Any misuse, abuse, or improper application or installation of this product or use of the product for personal protection applications when the product is identified as not intended for such purposes will void the product warranty. Any modifications to this product without prior express approval by Banner Engineering Corp will void the product warranties. All specifications published in this document are subject to change; Banner reserves the right to modify product specifications or update documentation at any time. Specifications and product information in English supersede that which is provided in any other language. For the most recent version of any documentation, refer to: www.bannerengineering.com.

For patent information, see www.bannerengineering.com/patents.

© Banner Engineering Corp. All rights reserved.
www.bannerengineering.com