4-port 3-pin M8 Female to 8-pin M12 Male Junction Block

Features

4-port Junction Block



Banner's Junction Blocks are designed to reduce wiring and to simplify connecting multiple products.

- 3-pin M8 female termination with 8-pin M12 male connector
- NPN, PNP, and discrete models available
- 8 signals, pin 4 each port

Models

Model	Output	Indication
JB-4M8-M12-P4	PNP	LED
JB-4M8-M12-N4	NPN	
JB-4M8-M12-4	Discrete	Non-LED

Wiring

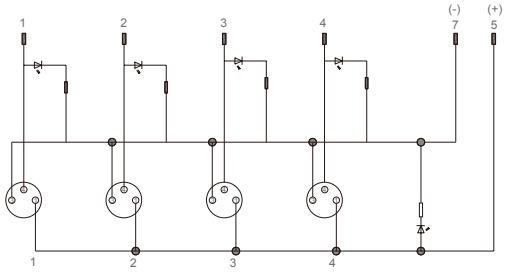

LED Indicating PNP
Other circuit diagram (NPN) can be customized

3-pin M8 Female Pinout



1 = Brown
3 = Blue
4 = Black

8-pin M12 Male Pinout

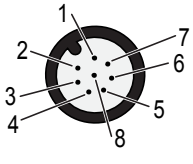

1 = White
2 = Brown
3 = Green
4 = Yellow
5 = Gray
6 = Pink
7 = Blue
8 = Red

Specifications

Voltage

LED models: 30 V DC
Non-LED models: 60 V DC

Current

6A total 2A per port

Original Instructions
20-Oct-25

© Banner Engineering Corp. All rights reserved.
www.bannerengineering.com

242044
p/n: 242044 Rev. B

ПРОМЭЛЕКТРОНИКА/ sales@prom-elec.com

Indicators (LED models only)
Power LED: Red (0 or 4, depending on model)
Signal LED: Yellow (0 or 1, depending on model)

Construction
Body: PBT
Coupling nut: Nickel-plated brass

Vibration
Method: EN 60068-2-6:2008
Frequency Range: 10-55 Hz (Sine)
Amplitude: 0.5 mm
Sweep Cycle Duration: 5 minutes (2.5 min per sweep)
Dwell Duration at resonant frequency: 30 Minutes

Mechanical Shock
Method: EN 60068-2-27:2009
Pulse Shape: Half-Sine
Peak Acceleration: 30 G
Duration of the pulse: 11 mS

Environmental Ratings
IP67

Operating Conditions
–25 °C to +80 °C (–13 °F to +176 °F)

Certifications

Dimensions

All measurements are listed in millimeters, unless noted otherwise. The measurements provided are subject to change.

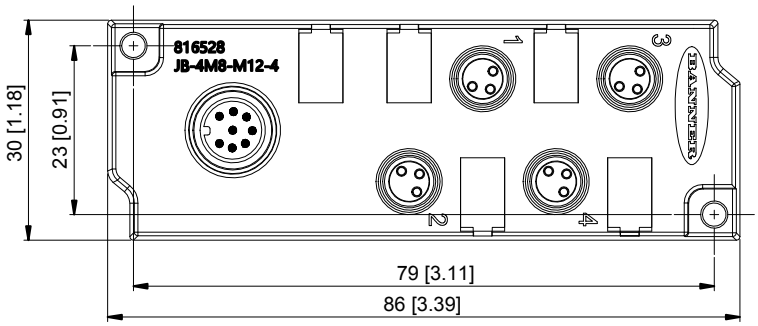

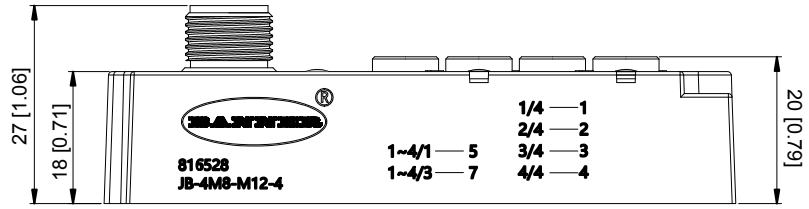

Accessories

Cordsets

Home Run Cordsets

8-pin A-Code Single-Ended M12 Female Cordsets (datasheet p/n 235941)				
Model	**Length**	**Dimensions (mm)**	**Pinout (Female)**	
BC-M12F8-24-1	1 m (3.28 ft)	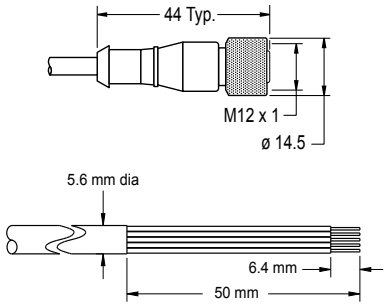	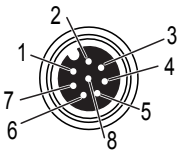	1 = White 2 = Brown 3 = Green 4 = Yellow 5 = Gray 6 = Pink 7 = Blue 8 = Red
BC-M12F8-24-2	2 m (6.56 ft)			
BC-M12F8-24-5	5 m (16.4 ft)			
BC-M12F8-24-10	10 m (30.81 ft)			

© Banner Engineering Corp. All rights reserved.
www.bannerengineering.com

8-pin A-Code Double-Ended M12 Female to M12 Male Cordsets (datasheet p/n 235955)				
Model	**Length**	**Dimensions (mm)**	**Pinouts (Female)**	**Pinouts (Male)**
BC-M12F8-M12M8-24-1	1 m (3.28 ft)	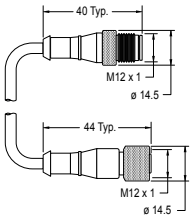	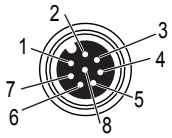	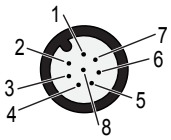
BC-M12F8-M12M8-24-2	2 m (6.56 ft)			
BC-M12F8-M12M8-24-5	5 m (16.4 ft)			
BC-M12F8-M12M8-24-8	8 m (26.25 ft)		1 = White 2 = Brown 3 = Green 4 = Yellow	5 = Gray 6 = Pink 7 = Blue 8 = Red
BC-M12F8-M12M8-24-10	10 m (30.81 ft)			
BC-M12F8-M12M8-24-15	15 m (49.2 ft)			

Signal Port Cordsets

3-pin Double-Ended M8 Female to M8 Male Cordsets (datasheet p/n 236620)				
Model	**Length**	**Dimensions (mm)**	**Pinout**	
BC-M8F3-M8M3-24-0.5	0.5 m (1.64 ft)	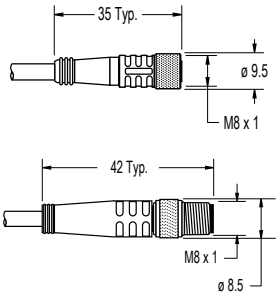	Female  Male 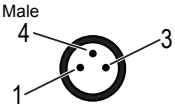	1 = Brown 3 = Blue 4 = Black c UL us LISTED
BC-M8F3-M8M3-24-1	1 m (3.28 ft)			
BC-M8F3-M8M3-24-2	2 m (6.56 ft)			
BC-M8F3-M8M3-24-5	5 m (16.4 ft)			
BC-M8F3-M8M3-24-8	8 m (26.25 ft)			
BC-M8F3-M8M3-24-10	10 m (30.81 ft)			

Product Support and Maintenance

Repairs

Contact Banner Engineering for troubleshooting of this device. **Do not attempt any repairs to this Banner device; it contains no field-replaceable parts or components.** If the device, device part, or device component is determined to be defective by a Banner Applications Engineer, they will advise you of Banner's RMA (Return Merchandise Authorization) procedure.

> **IMPORTANT:** If instructed to return the device, pack it with care. Damage that occurs in return shipping is not covered by warranty.

Contact Us

Banner Engineering Corp. | 9714 Tenth Avenue North | Plymouth, MN 55441, USA | Phone: + 1 888 373 6767

For worldwide locations and local representatives, visit www.bannerengineering.com.

Banner Engineering Corp Limited Warranty

Banner Engineering Corp. warrants its products to be free from defects in material and workmanship for one year following the date of shipment. Banner Engineering Corp. will repair or replace, free of charge, any product of its manufacture which, at the time it is returned to the factory, is found to have been defective during the warranty period. This warranty does not cover damage or liability for misuse, abuse, or the improper application or installation of the Banner product.

THIS LIMITED WARRANTY IS EXCLUSIVE AND IN LIEU OF ALL OTHER WARRANTIES WHETHER EXPRESS OR IMPLIED (INCLUDING, WITHOUT LIMITATION, ANY WARRANTY OF MERCHANTABILITY OR FITNESS FOR A PARTICULAR PURPOSE), AND WHETHER ARISING UNDER COURSE OF PERFORMANCE, COURSE OF DEALING OR TRADE USAGE.

This Warranty is exclusive and limited to repair or, at the discretion of Banner Engineering Corp., replacement. **IN NO EVENT SHALL BANNER ENGINEERING CORP. BE LIABLE TO BUYER OR ANY OTHER PERSON OR ENTITY FOR ANY EXTRA COSTS, EXPENSES, LOSSES, LOSS OF PROFITS, OR ANY INCIDENTAL, CONSEQUENTIAL OR SPECIAL DAMAGES RESULTING FROM ANY PRODUCT DEFECT OR FROM THE USE OR INABILITY TO USE THE PRODUCT, WHETHER ARISING IN CONTRACT OR WARRANTY, STATUTE, TORT, STRICT LIABILITY, NEGLIGENCE, OR OTHERWISE.**

Banner Engineering Corp. reserves the right to change, modify or improve the design of the product without assuming any obligations or liabilities relating to any product previously manufactured by Banner Engineering Corp. Any misuse, abuse, or improper application or installation of this product or use of the product for personal protection applications when the product is identified as not intended for such purposes will void the product warranty. Any modifications to this product without prior express approval by Banner Engineering Corp will void the product warranties. All specifications published in this document are subject to change; Banner reserves the right to modify product specifications or update documentation at any time. Specifications and product information in English supersede that which is provided in any other language. For the most recent version of any documentation, refer to: www.bannerengineering.com.

For patent information, see www.bannerengineering.com/patents.

© Banner Engineering Corp. All rights reserved.
www.bannerengineering.com