# Q85BW13 Series 24-240V ac/12-240V dc Sensors

*Opto-isolated solid-state SPST output with optional timing logic*

BANNER®
the photoelectric specialist

- **Economical sensors in rugged, NEMA-6P (IEC IP67) Cycolac® ABS housings; for 24-240V ac or 12-240V dc**
- **Models for polarized retroreflective, short-range and long-range diffuse, and opposed sensing modes**
- **Opto-isolated SPST solid-state output, light and dark operate; on/off output or programmable timing logic**
- **Output switches up to 250V ac, 250V dc, 300 mA max.**
- **Wiring chamber with two conduit entrances**
- **Indicators for OUTPUT ON & LIGHT SENSED (all models have Banner's patented* AID™ signal strength indicator system)**

Q85BW13 Series sensors are compact, economical, photoelectric sensors in rugged NEMA-6P rated ABS housings. They are ideally suited to conveyor control and similar applications. The timing logic functions offered in the "T9" models provide additional control capabilities over and above the ON/OFF (no delay) function of the basic models. Q85 sensors have a convenient wiring chamber with two conduit entrances for ease of connection and mounting.

Polarized retroreflective, short-range and long-range diffuse, and opposed mode models are offered. **See individual model descriptions, gain curves, and beam patterns, page 2.**

Q85BW13 Series sensors operate from 12-240V dc or 24-240V ac . All models have an optically-isolated SPST solid-state output capable of switching up to 250V ac, 250V dc, 300 mA maximum. All models are switch-selectable for either light-operate or dark-operate output.

These sensors are available with a choice of either ON/OFF output or programmable timing output logic models. Programmable timing logic ("T9") models provide eight switch-selectable logic functions: ON/OFF (no delay), ON delay, OFF delay, ON/OFF delay, one-shot (pulse), on-delayed one-shot, limit timer, and on-delayed limit timer. The adjustable time range for delay functions and pulse length is 0.1 to 5 seconds. All models have a SENSITIVITY control for precise adjustment of sensing gain.

Two top-mounted LED indicators are visible through a window in the wiring chamber's gasketed cover. The red AID™ indicator lights whenever the sensor "sees" its modulated light source, and pulses at a rate proportional to the strength of the received light signal. The yellow output indicator lights whenever the sensor's output conducts.

Q85 sensors have rugged yellow Cycolac® ABS housings with ultrasonically-welded acrylic lenses. A gasketed ABS cover protects the wiring chamber and the timing and sensitivity adjustment controls inside. Two 1/2-14 NPSM conduit entrances are provided, and a plug and gasket are included for sealing of a possible unused entrance. Q85 Series sensors are rated NEMA 1, 2, 3, 3S, 4, 4X, 6, 6P, 12, and 13 (IEC IP67). An 11-gauge plated steel mounting bracket and two plated mounting bolts and nuts (photo above and drawing, page 3) are included. NOTE: Cycolac® is a registered trademark of General Electric Co..

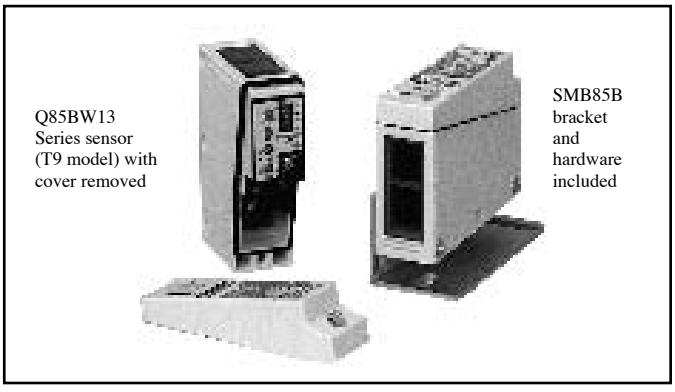


## Specifications, Q85BW13 Series Sensors

**Sensing range:** see individual sensor specifications (page 2).

**Sensing beam:** see individual sensor specifications (page 2).

**Supply voltage:** 24 to 240V ac (50/60 Hz) or 12 to 240V dc (2 watts maximum). No polarity for power supply hookup.

**Outputs (all models except emitters):**

**Opto-isolated SPST solid-state switch.**
Maximum ratings: 250V ac, 250V dc, 300 mA.
Output saturation voltage: 3V at 300 mA, 2V at 15 mA.
Output leakage curent: <50 microamps.
Inrush current: 1 amp for 20 milliseconds, non-repetetive.
This output is not short-circuit protected.
Exercise care when making wiring connections.
All sensors are protected against false pulse on power-up: false pulse protection circuit causes a 100 millisecond delay on power-up.
Models are available with either ON/OFF output or 8 switch-selectable output timing functions ("T9" model suffix); see page 2.

**Adjustments (all models except emitters):**

Single-turn SENSITIVITY control potentiometer, accessible beneath the ABS wiring chamber cover. Timing logic (for T9 models ) is configured at a DIP switch. Pulse length and delay are set by a single-turn potentiometer (under the wiring chamber cover). The adjustable time range for both functions is 0.1 to 5 seconds; both functions are automatically set to the same value. All models have a light/dark operate switch.

**Response Time and Repeatability** are independent of signal strength. See specifications under individual model listings, page 2.

**Status Indicators (all models except emitters):**

LEDs, one red and one yellow, both top-mounted. **Red** AID™ (Alignment Indicating Device system, US patent #4356393) indicator LED lights whenever the sensor "sees" its own modulated light source, and pulses at a rate proportional to the strength of the received light signal.
**Yellow** indicator lights whenever the sensor's output is conducting.

**Construction:**

Yellow Cycolac® ABS housing, plated steel hardware. Acrylic lens. ABS cover for wiring/adjustments access. Rated NEMA 1, 2, 3, 3S, 4, 4X, 6, 6P, 12, and 13; IEC IP67. It is the customer's responsibility to maintain NEMA 6P integrity at the conduit entrance(s) in use. Maximum wire size (for connection to wiring terminals) is #14 AWG.

**Operating temperature range:** -25° to +55°C (-13° to +131°F).

**Maximum relative humidity:** 90% at 50°C (non-condensing).

**WARNING** These photoelectric presence sensors do NOT include the self-checking redundant circuitry necessary to allow their use in personnel safety applications. A sensor failure or malfunction can result in either an energized or a de-energized sensor output condition.

Never use these products as sensing devices for personnel protection. Their use as safety devices may create an unsafe condition which could lead to serious injury or death. Only MACHINE-GUARD and PERIMETER-GUARD Systems, and other systems so designated, are designed to meet OSHA and ANSI machine safety standards for point-of-operation guarding devices. No other Banner sensors or controls are designed to meet these standards, and they must NOT be used as sensing devices for personnel protection.

Printed in USA P/N 35613

ПРОМЭЛЕКТРОНИКА/ sales@prom-elec.com

# Opposed Mode

**Sensing range:** 75 feet (23 meters)

**Sensing beam:** 680 nanometers, visible red

**Effective beam diameter:** 0.38 inches (9,6 mm)

**Models:**

**Q853E emitter (p/n 31648)** (use with either receiver, below)

**Q85BW13R receiver (p/n 35572) no timing logic**
optically-isolated SPST solid-state switch;
**response time** 6 milliseconds "on", 3 milliseconds "off"
**repeatability** 750 microseconds

**Q85BW13R-T9 receiver (p/n 35571) with timing logic**
optically-isolated SPST solid-state switch;
**response time** 12 milliseconds "on", 9 milliseconds "off"
**repeatability** 1 millisecond (with no timing in use)

**Excess Gain Curve**

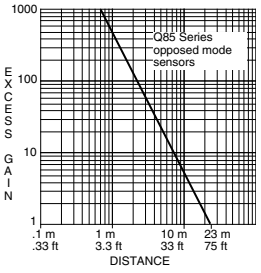


**Beam Pattern**

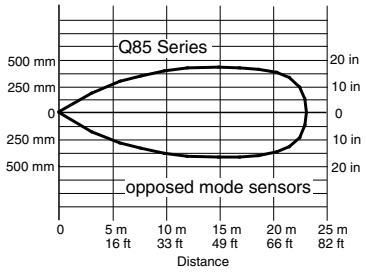


# Polarized Retroreflective Mode

**Sensing range:** 3 inches (8 cm) to 15 feet (4,6 m) when used with Banner model BRT-3 3-inch retroreflective target

**Sensing beam:** 680 nanometers, visible red (polarized)

**Models:**

**Q85BW13LP (p/n 35564) no timing logic**
optically-isolated SPST solid-state switch;
**response time** 4 milliseconds "on", 4 milliseconds "off"
**repeatability** 1 millisecond

**Q85BW13LP-T9 (p/n 35563) with timing logic**
optically-isolated SPST solid-state switch;
**response time** 10 milliseconds "on", 10 milliseconds "off"
**repeatability** 1 millisecond (with no timing in use)

**Excess Gain Curve**

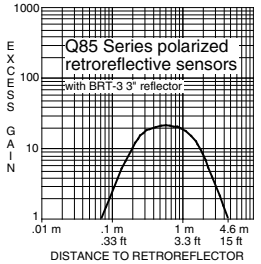


**Beam Pattern**

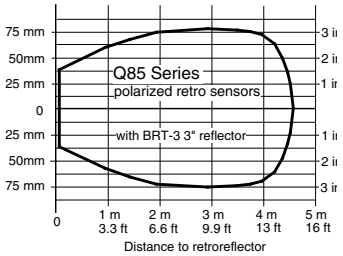


# Short-range Diffuse Mode

**Sensing range:** 10 inches (250 millimeters)
referenced to a 90% reflectance white test card

**Sensing beam:** 880 nanometers, infrared

**Models (short-range diffuse):**

**Q85BW13D (p/n 35576) no timing logic**
optically-isolated SPST solid-state switch;
**response time** 4 milliseconds "on", 4 milliseconds "off"
**repeatability** 1 millisecond

**Q85BW13D-T9 (p/n 35575) with timing logic**
optically-isolated SPST solid-state switch;
**response time** 10 milliseconds "on", 10 milliseconds "off"
**repeatability** 1 millisecond (with no timing in use)

**Excess Gain Curve**

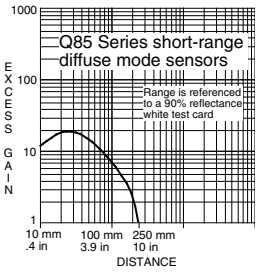


**Beam Pattern**

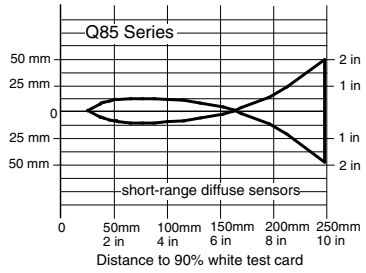


# Long-range Diffuse Mode

**Sensing range:** 39 inches (1 meter)
referenced to a 90% reflectance white test card

**Sensing beam:** 880 nanometers, infrared

**Models (long-range diffuse):**

**Q85BW13DL (p/n 35568) no timing logic**
optically-isolated SPST solid-state switch;
**response time** 4 milliseconds "on", 4 milliseconds "off"
**repeatability** 1 millisecond

**Q85BW13DL-T9 (p/n 35567) with timing logic**
optically-isolated SPST solid-state switch;
**response time** 10 milliseconds "on", 10 milliseconds "off"
**repeatability** 1 millisecond (with no timing in use)

**Excess Gain Curve**

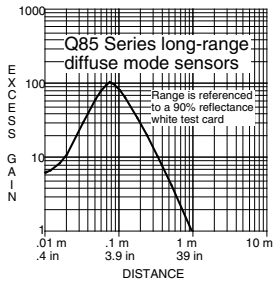


**Beam Pattern**

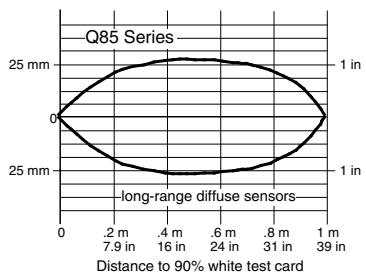

# Q85 Series ac/dc Sensors

## Timing Logic Selection and Hookup

The output timing logic function (on sensor models with T9 model number suffix) is selected at the timing logic programming switches, according to the table (below). The output timing logic delays are set at the single-turn time adjustment potentiometer. When the timing function involves more than one time (as in ON and OFF delay, ON-delayed one-shot, and ON-delayed limit timer functions), the potentiometer sets both times to the same value.

| Logic function | Switch: | SW1 | SW2 | SW3 |
|---|---|---|---|---|
| ON and OFF delays (both) | | 0 | 0 | 0 |
| ON delay (only) | | 0 | 0 | 1 |
| OFF delay (only) | | 0 | 1 | 0 |
| No delays | | 0 | 1 | 1 |
| ON delayed one-shot | | 1 | 0 | 0 |
| ON delayed limit timer | | 1 | 0 | 1 |
| One-shot | | 1 | 1 | 0 |
| Limit timer | | 1 | 1 | 1 |

With the *light/dark operate switch* (all models) set to **light operate (L.O.)**, the sensor's output is energized when the sensor sees its own modulated light source. In the **dark operate (D.O.)** position, the output is energized when the sensor does not see its modulated light source. **Sensor sensitivity** is set at the single-turn *sensitivity* adjustment potentiometer.

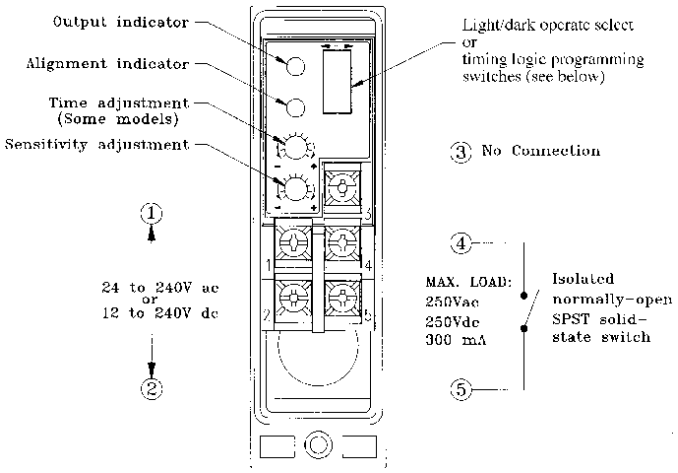


Light/dark Operate switch detail (basic on/off models):

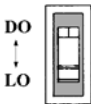


Timing Logic Programming switch detail (T9 models), see table (left):

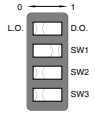


## Dimensions, Q85 Series sensors*

**Top view**

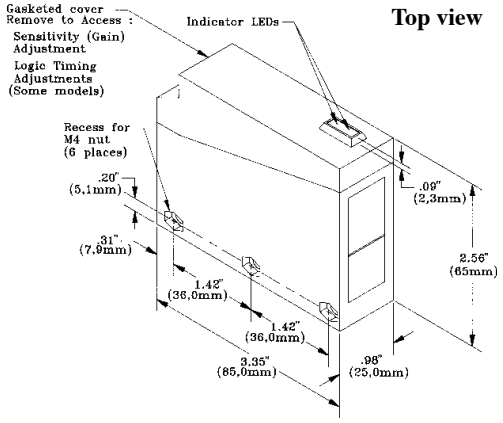


**Bottom view**

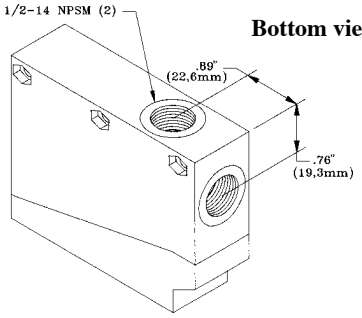


**Shown with SMB85B mounting bracket (included with sensor)**

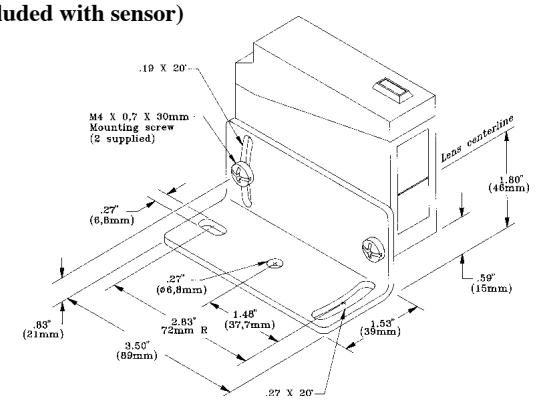


**Shown with SMB85R mounting bracket (p/n 32798, order separately)**

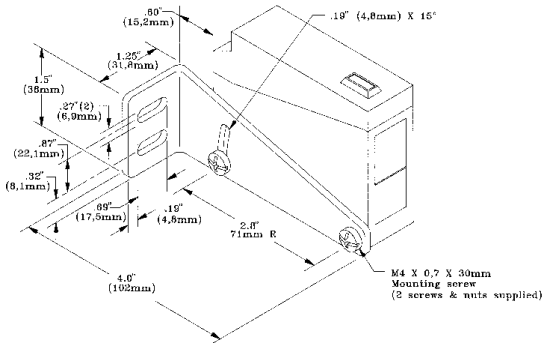


*Emitter units have same dimensions but no SENSITIVITY control, logic timing adjustments, or indicator LEDs.




**WARRANTY:** Banner Engineering Corporation warrants its products to be free from defects for one year. Banner Engineering Corporation will repair or replace, free of charge, any product of its manufacture found to be defective at the time it is returned to the factory during the warranty period. This warranty does not cover damage or liability for the improper application of Banner products. This warranty is in lieu of any other warranty either expressed or implied.

Banner Engineering Corp. 9714 10th Avenue No., Minneapolis, MN 55441 Telephone: (763) 544-3164 FAX (applications): (763) 544-3573