# SLE3 Slot Sensor

## Datasheet

*Slot sensor for adhesive labels*



- Optimized to sense adhesive labels adhered to a roll of backing paper
- High intensity infrared LED reduces sensitivity to web flutter
- A response time of 35 microseconds allows the SLE3 sensor to keep up with even the fastest high speed rewinders
- 10 mm width allows installation in small spaces
- Quick setup with the one-press **(Set)(+)** button
- Oversize indicator allows you to know the sensor's performance, even from a few feet away

**WARNING:**

- **Do not use this device for personnel protection**
- Using this device for personnel protection could result in serious injury or death.
- This device does not include the self-checking redundant circuitry necessary to allow its use in personnel safety applications. A device failure or malfunction can cause either an energized (on) or de-energized (off) output condition.

## Models

| Models | Supply Voltage | Output | Connections |
|---|---|---|---|
| **SLE3-PIR-Q7** | 4.75 V DC to 30 V DC | PNP | Integral 4-pin M8 male quick-disconnect connector |
| **SLE3-PIR-2M** | | | 1.8 m (6 ft) unterminated 4-wire cable |
| **SLE3-NIR-Q7** | | NPN | Integral 4-pin M8 male quick-disconnect connector |
| **SLE3-NIR-2M** | | | 1.8 m (6 ft) unterminated 4-wire cable |

## Features and Indicators

*Figure 1. Features*

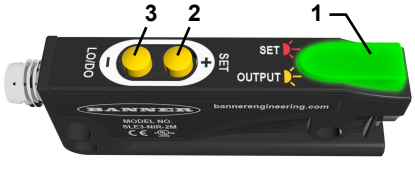


1. Three-color output indicator
2. (SET)(+) button
3. (LO/DO)(-) button

*Figure 2. Optical Path Alignment Marks*

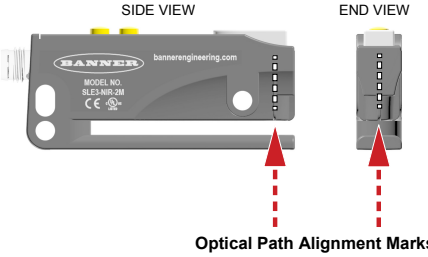


**Optical Path Alignment Marks**
(molded ridges in sensor)

**Output Indicator**

- Green LED indicates power ON and output OFF
- Amber LED indicates output ON
- Red LED indicates SET process

**(SET)(+) Button**

- Press and hold for 1seconds for TEACH
- Tap to adjust the threshold (+)

**(LO/DO)(-) Button**

- Press and hold to toggle between light operate and dark operate
- Tap to adjust the threshold (-)


Original Document
225945 Rev. A | 070-0701

24 March 2022

225945



ПРОМЭЛЕКТРОНИКА/ sales@prom-elec.com

## Installation Instructions

The SLE3 sensor was designed for standard mounting using the clearance holes.

## Wiring

*Figure 3. NPN*

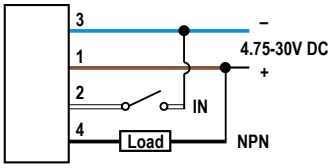


*Figure 4. PNP*

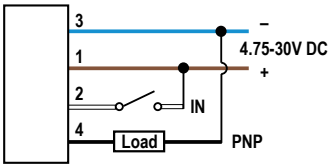


*Figure 5. M8 Male*




1 = Brown
2 = White
3 = Blue
4 = Black

## Configuring the Sensor

Use the following steps to configure the sensor.

1. Power on the sensor.
   The indicator illuminates green.
2. Place the gap between labels in the sensor's view using the optical path alignment guides. See Figure 2 on page 1.



**Tip:** If the gap is difficult to work with, try removing a label.

3. With the gap in view, press and hold **(SET)(+)** or activate the remote input wire for > 1 second, then release the button or deactivate the remote input wire.
   The indicator turns red, then back to green or amber. The indicator flashes red/green when the signal is insufficient.
4. If necessary, use the **(SET)(+)** and **(LO/DO)(-)** buttons to adjust the threshold.
5. Press and hold **(LO/DO)(-)** to toggle between light operate (LO) and dark operate (DO).
   The sensor configuration is complete.

## Specifications

**Supply Voltage and Current**
4.75 V DC to 30 V DC
Protected against reverse polarity
18 milliamps (exclusive of load)

**Output**
NPN or PNP (depending on model)
Outputs sink or source up to 120 milliamps (current limit)
Protected against output short-circuit

**Remote SET Input**
Active high (PNP) or active low (NPN), depending on model (1ma)
Protected against transient overvoltages

**Response Time**
35 µs

**Hysteresis**
5%

**Construction**
Top lid: polycarbonate
Output window: ABS
Case: 50% glass filled nylon
Buttons: silicon rubber

**Slot**
3 mm

**Sensing Beam**
High intensity infrared LED

**Light Immunity**
Responds to the pulsed modulated light source of the sensor, resulting in high immunity to most ambient light

**Connection**
Integral 4-pin M8 male quick-disconnect connector
1.8 m (6 ft) unterminated 4-wire cable

**Ambient Temperature**
–40 °C to +70 °C (–40 °F to +158 °F)

**Environmental RatingEnvironmental Rating**
IP65
RoHS Compliant

**Banner Engineering Europe** Park Lane, Culliganlaan 2F bus 3, 1831 Diegem, BELGIUM

**Turck Banner LTD** Blenheim House, Blenheim Court, Wickford, Essex SS11 8YT, Great Britain

## Dimensions

All measurements are listed in millimeters [inches], unless noted otherwise.

**Quick Disconnect Models**

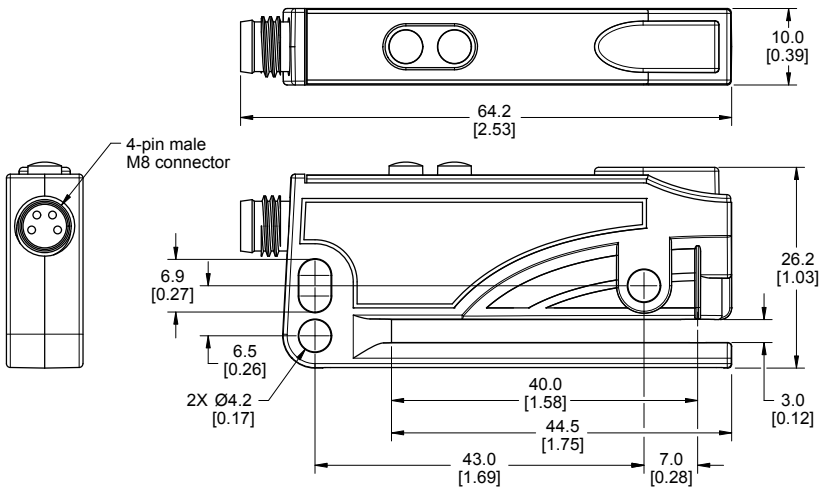


**Cable Models**

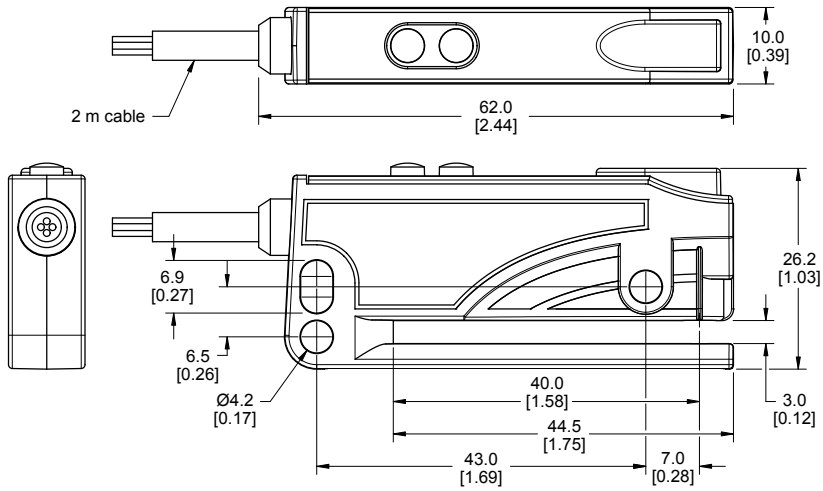


# Accessories

## Cordsets

| 4-Pin Threaded M8 Cordsets—Single Ended | | | | | |
|---|---|---|---|---|---|
| **Model** | **Length** | **Style** | **Dimensions** | **Pinout (Female)** | |
| **PKG4M-2** | 2.04 m (6.68 ft) | Straight | 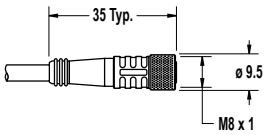  | 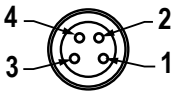  | 1 = Brown<br>2 = White<br>3 = Blue<br>4 = Black |
| **PKG4M-5** | 5 m (16.4 ft) | | | | |
| **PKG4M-9** | 9.04 m (29.6 ft) | | | | |
| **PKW4M-2** | 2 m (6.56 ft) | Right Angle | 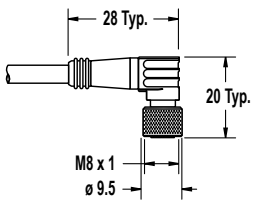  | 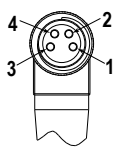  | |
| **PKW4M-5** | 5 m (16.4 ft) | | | | |
| **PKW4M-9** | 9 m (29.5 ft) | | | | |

# Banner Engineering Corp. Limited Warranty

Banner Engineering Corp. warrants its products to be free from defects in material and workmanship for one year following the date of shipment. Banner Engineering Corp. will repair or replace, free of charge, any product of its manufacture which, at the time it is returned to the factory, is found to have been defective during the warranty period. This warranty does not cover damage or liability for misuse, abuse, or the improper application or installation of the Banner product.

**THIS LIMITED WARRANTY IS EXCLUSIVE AND IN LIEU OF ALL OTHER WARRANTIES WHETHER EXPRESS OR IMPLIED (INCLUDING, WITHOUT LIMITATION, ANY WARRANTY OF MERCHANTABILITY OR FITNESS FOR A PARTICULAR PURPOSE), AND WHETHER ARISING UNDER COURSE OF PERFORMANCE, COURSE OF DEALING OR TRADE USAGE.**

This Warranty is exclusive and limited to repair or, at the discretion of Banner Engineering Corp., replacement. **IN NO EVENT SHALL BANNER ENGINEERING CORP. BE LIABLE TO BUYER OR ANY OTHER PERSON OR ENTITY FOR ANY EXTRA COSTS, EXPENSES, LOSSES, LOSS OF PROFITS, OR ANY INCIDENTAL, CONSEQUENTIAL OR SPECIAL DAMAGES RESULTING FROM ANY PRODUCT DEFECT OR FROM THE USE OR INABILITY TO USE THE PRODUCT, WHETHER ARISING IN CONTRACT OR WARRANTY, STATUTE, TORT, STRICT LIABILITY, NEGLIGENCE, OR OTHERWISE.**

Banner Engineering Corp. reserves the right to change, modify or improve the design of the product without assuming any obligations or liabilities relating to any product previously manufactured by Banner Engineering Corp. Any misuse, abuse, or improper application or installation of this product or use of the product for personal protection applications when the product is identified as not intended for such purposes will void the product warranty. Any modifications to this product without prior express approval by Banner Engineering Corp will void the product warranties. All specifications published in this document are subject to change; Banner reserves the right to modify product specifications or update documentation at any time. Specifications and product information in English supersede that which is provided in any other language. For the most recent version of any documentation, refer to: www.bannerengineering.com.

For patent information, see www.bannerengineering.com/patents.



© Banner Engineering Corp. All rights reserved