Datasheet

Low cost self-contained sensors for use with plastic fiber optics



- Low-cost, 10 V dc to 30 V dc, self-contained sensors for use with all Banner plastic fiber optics
- Compact 11 mm-wide housing designed for DIN rail mounting; also mounts to other surfaces using the supplied mounting bracket
- Choice of NPN (sinking) or PNP (sourcing) complementary outputs—one normally open and one normally closed; 150 mA output load rating
- Normally-closed output may be wired as a diagnostic alarm to alert personnel to marginal sensing conditions[1]
- Fast, 500 microsecond (0.5 millisecond) output response
- LED status indications for power ON, output overload, fiber alignment, and marginal gain conditions
- Choose models with integral 2 m (6.5 ft) cable or pico-style quick disconnect (QD) connector; 9 m (30 ft) cables are also available

WARNING: Not To Be Used for Personnel **Protection**

Never use this device as a sensing device for personnel **protection.** Doing so could lead to serious injury or death. This device does not include the self-checking redundant circuitry necessary to allow its use in personnel safety applications. A sensor failure or malfunction can cause either an energized or de-energized sensor output condition.

Models

Models	Range	**Connection**[2]	Supply Voltage	Output Type
D11SN6FP	Range varies by sensing mode and fiber optics used	2 m (6.5 ft)	10 V dc to 30 V dc	Complementary NPN (sinking)
D11SN6FPQ		4-pin Pico QD		
D11SP6FP		2 m (6.5 ft)		Complementary PNP (sourcing)
D11SP6FPQ		4-pin Pico QD		

Features

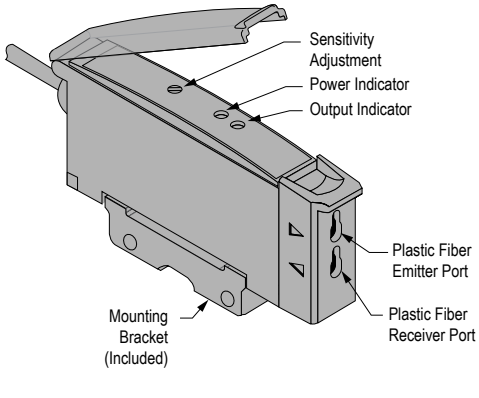

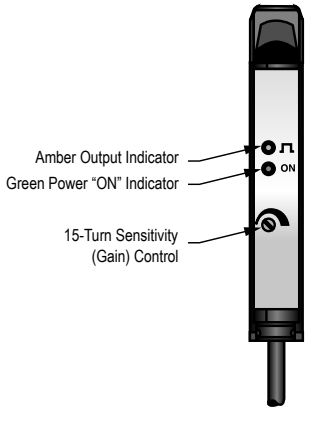

[1] U.S. Patent #5087838
[2] To order the 9 m (30 ft) PVC cable model, add the suffix "W/30" to the cabled model number. For example, D11SN6FP W/30. Models with a quick disconnect require a mating cordset.

ПРОМЭЛЕКТРОНИКА/ sales@prom-elec.com

Installation

Mount the D11 on a DIN rail or the included bracket.

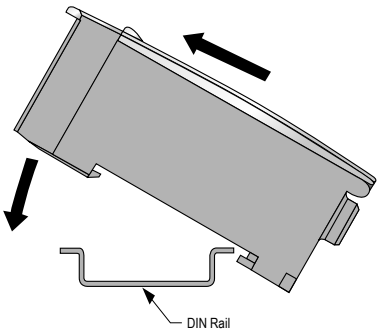

Installing **Plastic** Fibers

1. Cut the fiber ends according to the instructions included with the fibers.
2. Slide the fiber gripper up (open).
3. If you are using 0.254 mm or 0.508 mm (0 .010 inch or 0.020 inch) diameter fibers: Insert the adaptor into the ports as far as it will go.

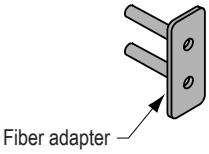

4. For all fiber diameters: Insert the prepared plastic fiber sensor ends gently into the ports as far as they will go.
5. Slide the fiber gripper back down to lock it.

Wiring Diagrams

NPN Outputs—Standard Wiring

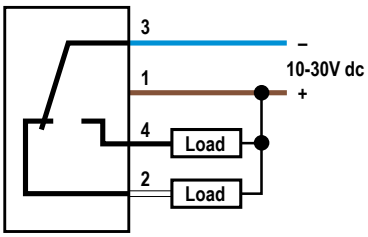

PNP Outputs—Standard Wiring

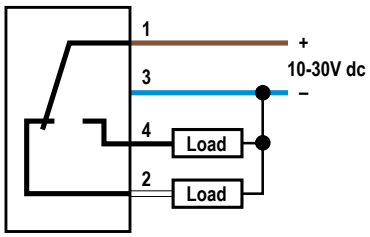

Key

1 = Brown
2 = White
3 = Blue
4 = Black

NPN Outputs—Alarm Wiring

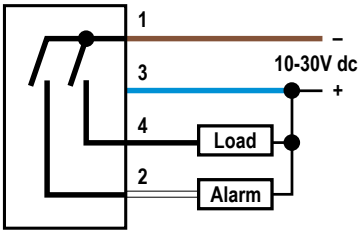

PNP Outputs—Alarm Wiring

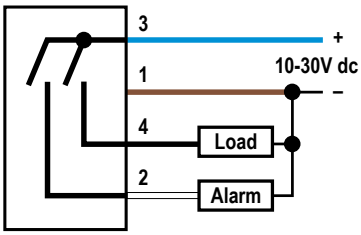

Quick disconnect (QD) wiring diagrams are functionally identical.

Specifications

Required Fiber **Optic** Cable
PI or PB Series plastic fibers

Sensing Beam
Visible red, 680 nm

Supply Voltage and Current
10 V dc to 30 V dc at 25 mA (exclusive of load current)

Supply **Protection** Circuitry
Protected against reverse polarity and transient voltages

Output **Configuration**
Complementary: one normally open (N.O.) and the other normally closed (N.C.); N.C. output may be wired as diagnostic alarm output by reversing power supply connections[3] (see Wiring Diagrams); Outputs are NPN (Sinking) or PNP (Sourcing), depending on model
Diagnostic alarm output energizes whenever excess gain falls to between 1× and 1.5× in the light condition; this output corresponds to flashing amber indicator LED

Output **Rating**
150 mA maximum (each output); the total load may not exceed 150 mA
Off-state leakage current: < 5 microamps at 30 V dc
On-state saturation voltage: < 1 V at 10 mA dc; < 1.5 V at 150 mA dc

Output **Protection** Circuitry
Protected against false pulse on power-up (false pulse protection circuit causes a 0.1 second delay on power-up); short-circuit protected

Output Response Time
500 microseconds "on" and "off"

Repeatability
160 microseconds; response time and repeatability are independent of signal strength

Adjustments
The sensitivity control is located on top of the module; it is a 15-turn slotted brass screw, clutched at both ends of travel

Indicators
Two LEDs: Green and Amber
Green steady = power to sensor is "on"
Green flashing = output is overloaded
Amber steady = normally open output is conducting
Amber flashing = marginal excess gain (1× to 1.5×) in light condition = alarm output "on"

Construction
Black ABS flame retardant housing with acrylic cover; Stainless steel M3 × 0.5 hardware for use with ABS mounting bracket (supplied)

Environmental **Rating**
IEC IP54; NEMA 2

Connections
2 m (6-1/2 ft) or 9 m (30 ft) attached cable, or 4-pin pico-style quick disconnect fitting; Cables for QD models are purchased separately

Operating Conditions
–20 °C to +55 °C (–4 °F to +131°F)
90% at +50 °C maximum relative humidity (non-condensing)

Required Overcurrent **Protection**

WARNING: Electrical connections must be made by qualified personnel in accordance with local and national electrical codes and regulations.

Overcurrent protection is required to be provided by end product application per the supplied table.
Overcurrent protection may be provided with external fusing or via Current Limiting, Class 2 Power Supply.
Supply wiring leads < 24 AWG shall not be spliced.
For additional product support, go to *www.bannerengineering.com*.

Supply Wiring (AWG)	Required Overcurrent **Protection** (Amps)
20	5.0
22	3.0
24	2.0
26	1.0
28	0.8
30	0.5

Certifications

Dimensions

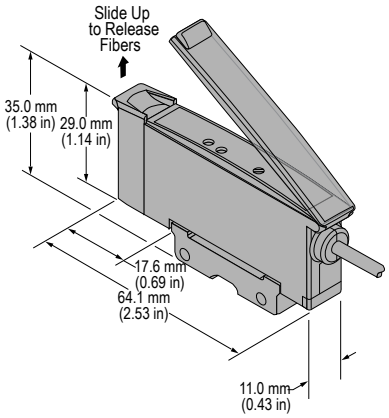

Figure 1. Cabled Models

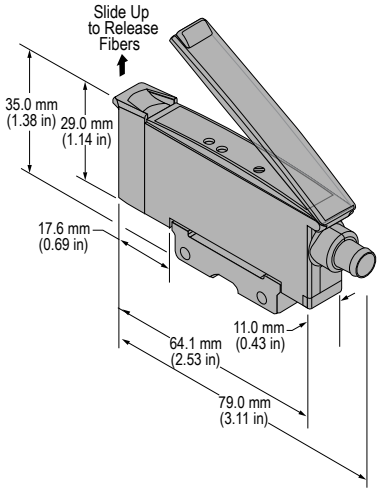

Figure 2. QD Models

[3] U.S. Patent #5087838

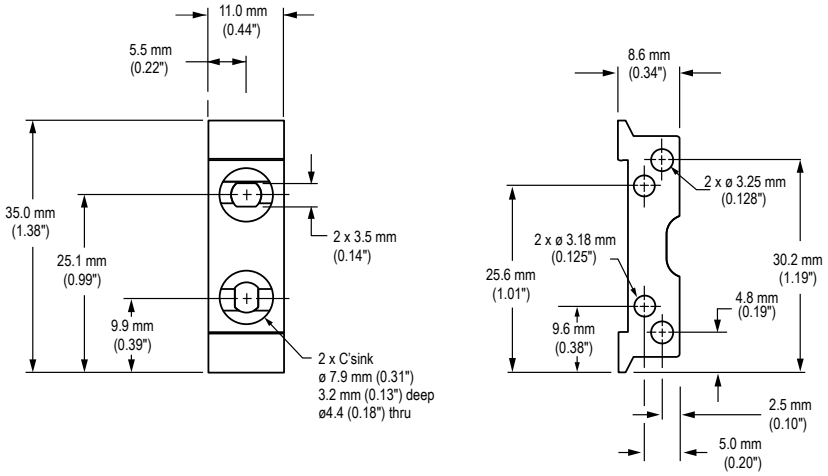

Figure 3. Mounting Bracket

Performance Curves

Diffuse mode performance based on 90% reflectance white test card.

Opposed Mode

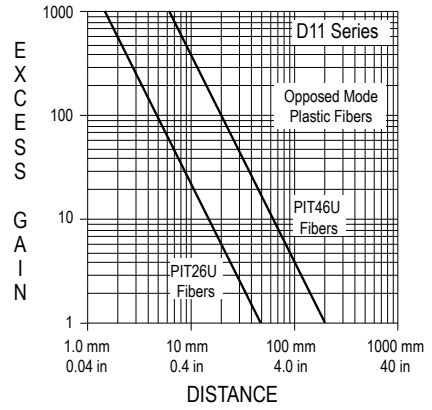

Diffuse Mode

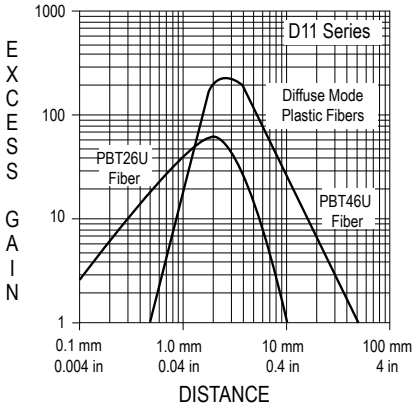

Accessories

4-Pin Snap-on M8/Pico-Style Cordsets				
Model	Length	Style	Dimensions	Pinout (Female)
PKG4-2	2 m (6.56 ft)	Straight	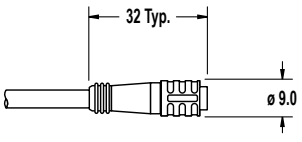	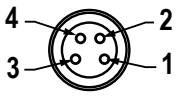 1 = Brown 2 = White 3 = Blue 4 = Black
PKW4Z-2	2 m (6.56 ft)	Right-Angle	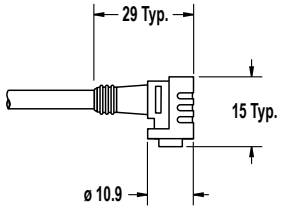	

Banner Engineering Corp. Limited Warranty

Banner Engineering Corp. warrants its products to be free from defects in material and workmanship for one year following the date of shipment. Banner Engineering Corp. will repair or replace, free of charge, any product of its manufacture which, at the time it is returned to the factory, is found to have been defective during the warranty period. This warranty does not cover damage or liability for misuse, abuse, or the improper application or installation of the Banner product.

THIS LIMITED WARRANTY IS EXCLUSIVE AND IN LIEU OF ALL OTHER WARRANTIES WHETHER EXPRESS OR IMPLIED (INCLUDING, WITHOUT LIMITATION, ANY WARRANTY OF MERCHANTABILITY OR FITNESS FOR A PARTICULAR PURPOSE), AND WHETHER ARISING UNDER COURSE OF PERFORMANCE, COURSE OF DEALING OR TRADE USAGE.

This Warranty is exclusive and limited to repair or, at the discretion of Banner Engineering Corp., replacement. IN NO EVENT SHALL BANNER ENGINEERING CORP. BE LIABLE TO BUYER OR ANY OTHER PERSON OR ENTITY FOR ANY EXTRA COSTS, EXPENSES, LOSSES, LOSS OF PROFITS, OR ANY INCIDENTAL, CONSEQUENTIAL OR SPECIAL DAMAGES RESULTING FROM ANY PRODUCT DEFECT OR FROM THE USE OR INABILITY TO USE THE PRODUCT, WHETHER ARISING IN CONTRACT OR WARRANTY, STATUTE, TORT, STRICT LIABILITY, NEGLIGENCE, OR OTHERWISE.

Banner Engineering Corp. reserves the right to change, modify or improve the design of the product without assuming any obligations or liabilities relating to any product previously manufactured by Banner Engineering Corp. Any misuse, abuse, or improper application or installation of this product or use of the product for personal protection applications when the product is identified as not intended for such purposes will void the product warranty. Any modifications to this product without prior express approval by Banner Engineering Corp will void the product warranties. All specifications published in this document are subject to change; Banner reserves the right to modify product specifications or update documentation at any time. Specifications and product information in English supersede that which is provided in any other language. For the most recent version of any documentation, refer to: *www.bannerengineering.com*.

© Banner Engineering Corp. All rights reserved