more sensors, more solutions

SMB4050YL Accessory Bracket

Accessory Bracket for use with WORLD-BEAM® QS18 Sensors

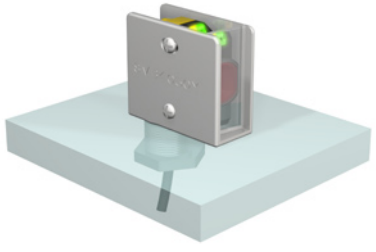

Features

- Nickel-plated die-cast bracket provides heavy-duty protection of the sensor
- Replacement window (PETG plastic) to protect the sensor from weld and paint splatter
- M18 base mounting option
- All mounting hardware included with the bracket

WORLD-BEAM® QS18 Compatibility

	Model	Compatible with Bracket	Compatible with Bracket and Protective Window	Impact of Window
Standard Series	QS186E	Yes	Yes	• Excess Gain reduced by up to 20% • Range reduced by up to 10% • Minimum detectable object size may increase when bracket is used } of E/R pair
	QS18V*6R			
	QS186EB			
	QS18V*6RB			
	QS186LE	Yes	Yes	• Excess Gain reduced by up to 20% • Range reduced by up to 10% } of E/R pair
	QS186LE10			
	QS186LE11			
	QS186LE12			
	QS186LE14			
	QS18V*6LV	Yes	Yes	• Excess Gain reduced by up to 20% • Range reduced by up to 10%
	QS18V*6LP			
	QS18V*6LLP			
	QS18V*6CV15	Yes	Yes	• Excess Gain reduced by up to 20%
	QS18V*6CV45			
	QS18V*6D	Yes	**CONDITIONAL***	• Excess Gain reduced by up to 20% • Range reduced by up to 10%
	QS18V*6LD		Yes	
	QS18V*6DB	**NO**	**NO**	See bracket SMBQS18A
	QS18V*6W			
	QS18V*6AF100	**NO**	**NO**	See bracket SMBQS18YL
	QS18V*6LAF			
	QS18V*6LAF250			
	QS18V*6FF50	Yes	Yes	• Excess Gain reduced by up to 20%
	QS18V*6FF100			
	QS18V*6F	Yes	**NO**	N/A
	QS18V*6FP			

* Conditional indicates the application must be tested for sufficient contrast at selected gain setting with the protective window in place.

⚠ WARNING . . . Not To Be Used for Personnel Protection

Never use these products as sensing devices for personnel protection. Doing so could lead to serious injury or death.

These sensors do NOT include the self-checking redundant circuitry necessary to allow their use in personnel safety applications. A sensor failure or malfunction can cause either an energized or de-energized sensor output condition. Consult your current Banner Safety Products catalog for safety products which meet OSHA, ANSI and IEC standards for personnel protection.

Printed in USA 05/08 P/N 140733

ПРОМЭЛЕКТРОНИКА/ sales@prom-elec.com

SMB4050YL Accessory Bracket

WORLD-BEAM® QS18 Compatibility (continued)

Model		Compatible with Bracket	Compatible with Bracket and Protective Window	Impact of Window
Expert Series	QS18E*6CV15	Yes	Yes	• Excess Gain reduced by up to 20%
	QS18E*6CV45			
	QS18E*6LP	Yes	Yes	• Excess Gain reduced by up to 20% • Range reduced by up to 10%
	QS18E*6D		**CONDITIONAL***	
	QS18E*6DV		**CONDITIONAL***	
	QS18E*6DB	**NO**	**NO**	See bracket SMBQS18A
	QS18E*6W			
	QS18E*6FP	Yes	**NO**	N/A

* Conditional indicates the application must be tested for sufficient contrast under the selected TEACH conditions with the protective window in place.

Dimensions

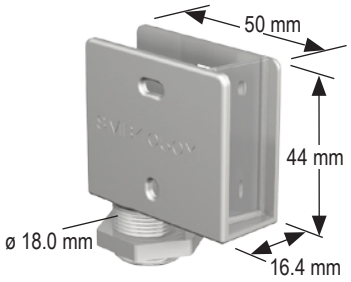

Installation

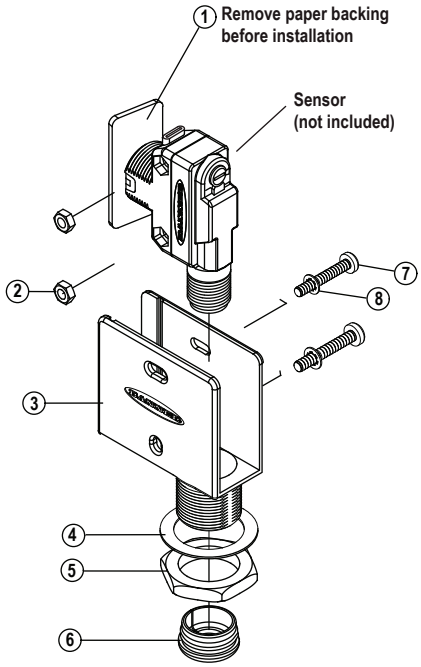

Parts List		Quantity
1	Window*	1
2	Mounting Nuts, M3 X 5	2
3	SMB4050YL Bracket	1
4	3/4" Narrow Washer	1
5	Jam Nut, M18 X 1	1
6	Grommet, M18	1
7	Mounting Bolts, M3 X 20	2
8	Washers, M3	2

* Window intentionally angled at 10° to provide efficient light transmission without reflection. A packet of 10 replacement windows can be ordered separately (P/N 78387), contact factory.

BANNER®
more sensors, more solutions

WARRANTY: Banner Engineering Corp. warrants its products to be free from defects for one year. Banner Engineering Corp. will repair or replace, free of charge, any product of its manufacture found to be defective at the time it is returned to the factory during the warranty period. This warranty does not cover damage or liability for the improper application of Banner products. This warranty is in lieu of any other warranty either expressed or implied.

P/N 140733

Banner Engineering Corp., 9714 Tenth Ave. No., Minneapolis, MN USA 55441 • Phone: 763.544.3164 • www.bannerengineering.com • Email: sensors@bannerengineering.com