EZ-SCREEN® LS AC Interface Module

Datasheet

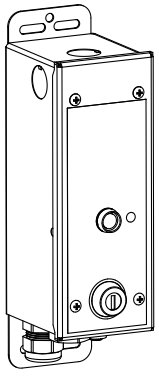

- AC power supply for use with the EZ-SCREEN LS sensors with 8-pin 300 mm pigtail cables. Models EZAC-R9A-QE8 and EZAC-R11A-QE8 can be interfaced with up to three cascaded emitter/receiver pairs.
- Supplies +24 V DC power at 0.7 amps (16.8 W maximum power)
- Accepts input voltages from 100 to 230 V AC (50 to 60 Hz)
- External device monitoring (EDM)
- Scan Code Select switch
- Replaceable relay module with 8 Amp / 250V AC/DC safety output contacts
- Mounts directly onto sensor housing (hardware included)
- Easy M12/Euro-style quick disconnect receiver and emitter connection using the CSB-M128..M1281 Splitter cordset (see accessories list)
- Hard-wired power and output/EDM connections (two cable gland strain reliefs supplied)

WARNING:
- **Not a stand-alone safeguarding device**
- Failure to properly safeguard hazards according to a risk assessment, local regulations, and applicable standards might lead to serious injury or death.
- This Banner device is considered complementary equipment that is used to augment safeguarding that limits or eliminates an individual's exposure to a hazard without action by the individual or others.

Models

Model	Outputs	EDM	Emitter/Receiver Connection	AC Power Connection	Output and EDM Connections
EZAC-R9A-QE8	3 normally open (N.O.)	1-Channel or a jumper added for no EDM	8-Pin M12/Euro-style QD	Hard-wired	Hard-wired
EZAC-R11A-QE8	2 normally open (N.O.) and 1 normally closed (N.C.) auxilliary				

Important... Read this before proceeding!

The user is responsible for satisfying all local, state, and national laws, rules, codes, and regulations relating to the use of this product and its application. Banner Engineering Corp. has made every effort to provide complete application, installation, operation, and maintenance instructions. Please contact a Banner Applications Engineer with any questions regarding this product.

The user is responsible for making sure that all machine operators, maintenance personnel, electricians, and supervisors are thoroughly familiar with and understand all instructions regarding the installation, maintenance, and use of this product, and with the machinery it controls. The user and any personnel involved with the installation and use of this product must be thoroughly familiar with all applicable standards, some of which are listed within the specifications. Banner Engineering Corp. makes no claim regarding a specific recommendation of any organization, the accuracy or effectiveness of any information provided, or the appropriateness of the provided information for a specific application.

Overview

The EZ-SCREEN LS AC Interface Module (EZAC Series) is powered by 100 to 230 V AC (50 to 60 Hz). EZAC-R..A models can supply +24 V DC to one EZ-SCREEN LS receiver, a single emitter-receiver pair, or up to three cascaded emitter-receiver pairs.

The integrated interface module, located on a replaceable PC-board, converts the EZ-SCREEN LS receiver OSSD output signals into isolated redundant output channels with an 8 amp / 250V AC/DC switching capacity for AC or DC safety circuits (see the models table for output descriptions). The outputs can also be used to switch low power capacity safety controls with low current input/output ratings.

The interface module outputs follow the action of the EZ-SCREEN LS OSSD outputs, with a 10 millisecond response time in turning OFF and approximately 10 millisecond delay in turning ON. Any latching function (such as manual reset, start/restart enable, etc.) is provided by the controlling safeguarding device or the machine control. All models feature external device monitoring (EDM) in the form of 1-Ch EDM that can monitor external devices or can be jumpered (no monitoring).

Original Document
194317 Rev. B

18 August 2021

194317

ПРОМЭЛЕКТРОНИКА/ sales@prom-elec.com

All models have one 8-pin M12/Euro-style quick disconnect to connect to the EZ-SCREEN LS receiver with the model suffix "P8" (or P88 for receiver and emitter pairs). **The EZAC AC Interface Box must be monitored by the 1-CH EDM input of the EZ-SCREEN LS**. External devices can be monitored in applications requiring Control Reliability per OSHA/ANSI or Category 3 or 4 per ISO13849-1 via the 1-CH EDM wiring.

Safety Circuit Integrity and ISO 13849-1 Safety Circuit Principles

Safety circuits involve the safety-related functions of a machine that minimize the level of risk of harm. These safety-related functions can prevent initiation, or they can stop or remove a hazard. The failure of a safety-related function or its associated safety circuit usually results in an increased risk of harm.

The integrity of a safety circuit depends on several factors, including fault tolerance, risk reduction, reliable and well-tried components, well-tried safety principles, and other design considerations.

Depending on the level of risk associated with the machine or its operation, an appropriate level of safety circuit integrity (performance) must be incorporated into its design. Standards that detail safety performance levels include ANSI B11.19 Performance Criteria for Safeguarding and ISO 13849-1 Safety-Related Parts of a Control System.

Safety Circuit Integrity Levels

Safety circuits in International and European standards have been segmented into Categories and Performance Levels, depending on their ability to maintain their integrity in the event of a failure and the statistical likelihood of that failure. ISO 13849-1 details safety circuit integrity by describing circuit architecture/structure (Categories) and the required performance level (PL) of safety functions under foreseeable conditions.

In the United States, the typical level of safety circuit integrity has been called "Control Reliability". Control Reliability typically incorporates redundant control and self-checking circuitry and has been loosely equated to ISO 13849-1 Category 3 or 4 and/or Performance Level “d” or “e” (see ANSI B11.19).

Perform a risk assessment to ensure appropriate application, interfacing/hookup, and risk reduction (see ANSI B11.0 or ISO 12100). The risk assessment must be performed to determine the appropriate safety circuit integrity in order to ensure that the expected risk reduction is achieved. This risk assessment must take into account all local regulations and relevant standards, such as U.S. Control Reliability or European "C" level standards.

Fault Exclusion

An important concept within the requirements of ISO 13849-1 is the probability of the occurrence of a failure, which can be reduced using a technique termed "fault exclusion." The rationale assumes that the possibility of certain well-defined failure(s) can be reduced via design, installation, or technical improbability to a point where the resulting fault(s) can be, for the most part, disregarded —that is, "excluded" in the evaluation.

Fault exclusion is a tool a designer can use during the development of the safety-related part of the control system and the risk assessment process. Fault exclusion allows the designer to design out the possibility of various failures and justify it through the risk assessment process to meet the requirements of ISO 13849-1/-2.

Requirements vary widely for the level of safety circuit integrity in safety applications (that is, Control Reliability or Category/ Performance Level) per ISO 13849-1. Although Banner always recommends the highest level of safety in any application, the user is responsible to safely install, operate, and maintain each safety system and comply with all relevant laws and regulations.

WARNING:
- **Determine the safety category**
- The design and installation of the safety devices and the means of interfacing of those devices could greatly affect the level of safety circuit integrity.
- Perform a risk assessment to determine the appropriate safety circuit integrity level or safety category, as described by ISO 13849-1, to ensure that the expected risk reduction is achieved and that all applicable regulations and standards are met.

Controlling Safeguarding Device Requirements

The EZAC Interface Module is driven by two OSSD safety output channels of a controlling safeguarding device. **This device is typically the EZ-SCREEN LS safety light screen with a "P8" or "P88" model number suffix; contact Banner Engineering for assistance if any other device is to be interfaced.** The user must refer to the EZ-SCREEN LS instruction manual for complete installation and operation instructions.

At a minimum, the controlling safeguarding device must have External Device Monitoring capability to monitor the internal relays of the EZAC Interfacing Module.

CAUTION:
- **Incomplete installation information**
- Many installation considerations necessary to properly apply these devices are not covered by this document.
- Refer to the appropriate device installation instructions to ensure the safe application of the device.

WARNING: Not for use as a stand-alone safety module.

1. **DO NOT connect E-stop switches, 2-hand control switches, safety interlock switches, or similar devices directly to this module.**
2. Always connect pin 2 of the receiver/emitter M12 QD connection to the external device monitoring input of the controlling safeguarding device.

The EZAC module does not have the circuitry required to perform a self-check. A single fault inside the unit or in external devices (like switches or E-stop buttons) can go undetected and create an unsafe condition. **Failure to properly connect the EZAC box to a safeguarding device with a monitoring function could result in serious injury or death.**

Installation Instructions

Mechanical Installation

Mount the module in a convenient location that is free from heavy impulse force and high-amplitude vibration. The module and any auxiliary Reset switches must be located outside the guarded area, where the switch operator has a full unobstructed view of the entire guarded area and any associated hazards as the reset is performed. The module and any auxiliary reset switch(es) must not be reachable from within the guarded area and must be protected (through the use of rings or guards, for example) against unauthorized or inadvertent operation. Refer *Dimensions* for dimensions and mounting hole locations.

The module is designed for mounting directly to the emitter or receiver housing, if desired. The module meets IEC IP65 standards; an additional enclosure or cabinet is not required.

Electrical Installation

WARNING:

- **Risk of electric shock**
- Use extreme caution to avoid electrical shock. Serious injury or death could result.
- Always disconnect power from the safety system (for example, device, module, interfacing, etc.), guarded machine, and/or the machine being controlled before making any connections or replacing any component. Lockout/tagout procedures might be required. Refer to OSHA 29CFR1910.147, ANSI Z244-1, or the applicable standard for controlling hazardous energy.
- Make no more connections to the device or system than are described in this manual. Electrical installation and wiring must be made by a Qualified Person [1] and must comply with the applicable electrical standards and wiring codes, such as the NEC (National Electrical Code), NFPA 79, or IEC 60204-1, and all applicable local standards and codes.

Electrical installation must be made by qualified personnel and must comply with NEC (National Electrical Code), NFPA 79 or IEC/EN 60204-1, and all applicable local standards. It is not possible to give exact wiring instructions for a device that interfaces to a multitude of machine control configurations. The following guidelines are general in nature. Perform a risk assessment to ensure appropriate application, interfacing/hookup, and risk reduction (see ANSI B11.0 or ISO 12100).

If you have any questions about your intended use, please contact a Banner applications engineer.

The module has no delay function. Its output relay contacts open within **10 milliseconds** after a safety input opens. This classifies the module as a functional stop "Category 0" control, as defined by NFPA 79 and IEC/EN 60204-1.

Both EZAC-R..A.. models have one 8-pin M12/Euro-style quick disconnect to connect to the EZ-SCREEN LS receiver and emitter (models with a "P8" or "P88" model number suffix). Power and Output connections are made through two holes with 1/2-inch NPT threads to accommodate conduit fitting or cable gland and hard-wire cables (two cable glands and one hole plug included).

Connection to the Machine to be Controlled

The machine wiring diagram shows a generic connection of the Interface Module's redundant output circuits to the machine primary control elements (MPCEs).

An MPCE is defined as an electrically powered device, external to the Interface Module, that stops the machinery being controlled by immediately removing electrical power to the machine and (when necessary) by applying braking to dangerous motion. This stopping action is accomplished by removing power to the actuator of either MPCE.

When switching inductive AC loads, it is good practice to protect the Interface Module outputs by installing appropriately-sized arc suppressors. However, if arc suppressors are used, they must be installed across the load being switched (for example, across the coils of external safety relays), and never across the Safety Module's output contacts (see the following warning about arc suppressors).

[1] A person who, by possession of a recognized degree or certificate of professional training, or who, by extensive knowledge, training and experience, has successfully demonstrated the ability to solve problems relating to the subject matter and work.

WARNING:
- **Properly install arc or transient suppressors**
- Failure to follow these instructions could result in serious injury or death.
- Install any suppressors as shown across the coils of the machine primary control elements. Do not install suppressors directly across the output contacts of the safety or interface module. In such a configuration, it is possible for suppressors to fail as a short circuit.

WARNING:
- **Interfacing master stop controls**
- Failure to follow these instructions could result in serious injury or death.
- Unless the same degree of safety is maintained, never wire an intermediate device(s) (PLC, PES, PC) between the safety module outputs and the master stop control element it switches such that a failure causes a loss of the safety stop command or the failure allows the safety function to be suspended, overridden, or defeated.
- When forced-guided, mechanically linked relays are added as intermediate switching devices, a normally closed (N.C.) forced-guided monitor contact from each relay must be added to the series feedback loop or properly wired external device monitoring channel.

External Device Monitoring

To satisfy the requirements of Control Reliability (OSHA and ANSI) Category 3 and 4 or ISO 13849-1, the machine primary control elements (MPCEs) must each offer a normally closed, forced-guided (mechanically linked) monitor contact. Connect one normally closed monitor contact from each machine primary control element (MPCE) in series to X1 and X2 (refer to the wiring diagrams).

In operation, if one of the switching contacts of either MPCE fails in the energized condition, the associated monitor contact remains open. Therefore, the EZ-SCREEN LS will lock out with an error code #8 or #13. If no MPCE-monitor contacts are monitored, a jumper must be installed as shown the wiring diagrams. It is the user's responsibility to ensure that any single failure will not result in a hazardous condition and will prevent a successive machine cycle.

Auxiliary Monitor Contact Connection (EZAC-R11A-QE8)

The action of the normally closed auxiliary monitor contact inversely "follows" the action of the normally open safety outputs. This output is to be used only for non-safety functions (typically, to communicate the status of the Safety Module to a programmable logic controller). See the appropriate figure for wiring information.

Overvoltage Category II and III Installations (EN 50178 and IEC 60664-1)

The AC Interface Modules is rated for Overvoltage Category III when voltages of 1 V to 150 V AC/DC are applied to the output relay contacts. It is rated for Overvoltage Category II when voltages of 151 V to 250 V AC/DC are applied to the output relay contacts and no additional precautions are taken to attenuate possible overvoltage situations in the supply voltage. The AC Interface Modules can be used in an Overvoltage Category III environment (with voltages of 151 V to 250 V AC/DC) if care is taken either to reduce the level of electrical disturbances seen by the AC Interface Modules to Overvoltage Category II levels by installing surge suppressor devices (for example, arc suppressors), or to install extra external insulation in order to isolate both the AC Interface Modules and the user from the higher voltage levels of a Category III environment.

For Overvoltage Category III installations with applied voltages from 151 V to 250 V AC/DC applied to the output contact(s): the AC Interface Modules may be used under the conditions of a higher overvoltage category where appropriate overvoltage reduction is provided. Appropriate methods include:
- An overvoltage protective device
- A transformer with isolated windings
- A distribution system with multiple branch circuits (capable of diverting energy of surges)
- A capacitance capable of absorbing energy of surges
- A resistance or similar damping device capable of dissipating the energy of surges

When switching inductive AC loads, it is good practice to protect the AC Interface Modules outputs by installing appropriately-sized arc suppressors. However, if arc suppressors are used, they must be installed across the load being switched (for example, across the coils of external safety relays), and never across the AC Interface Modules's output contacts.

Wiring Diagrams

Figure 1. AC Interface Module and EZ-SCREEN LS Light Curtains

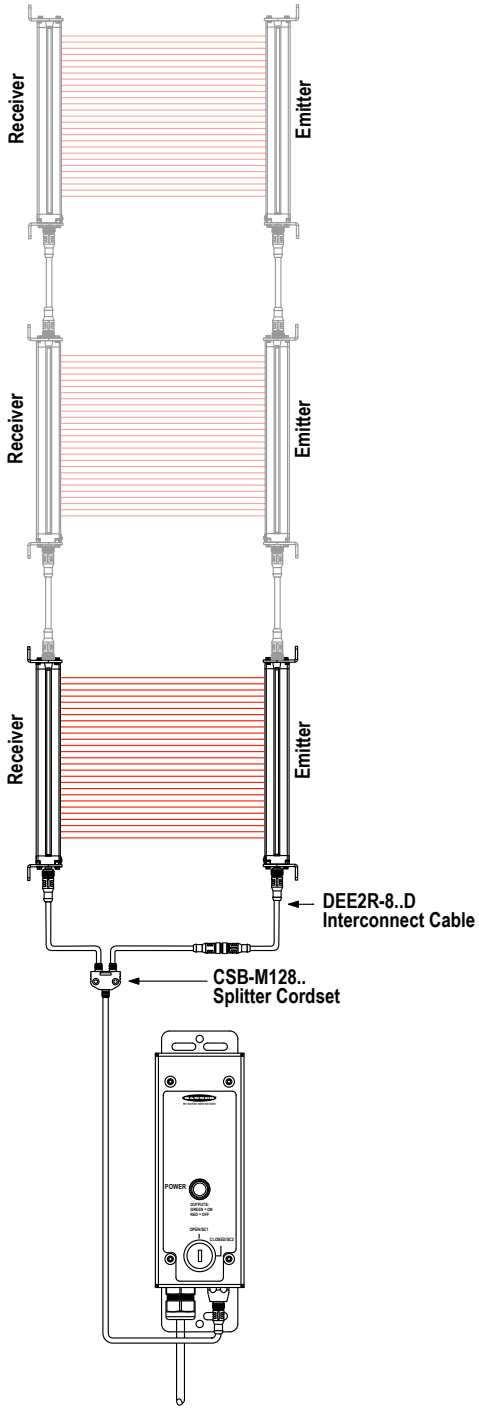

Figure 2. Internal Board Layout

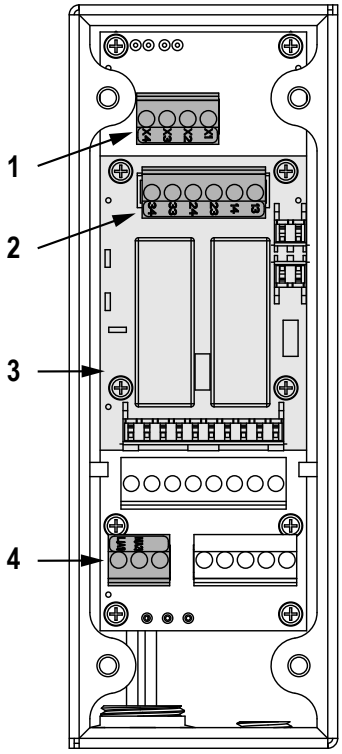

1. External device monitoring
2. Outputs
3. Relay module
4. Power

Figure 3. EZAC-R9A-QE8

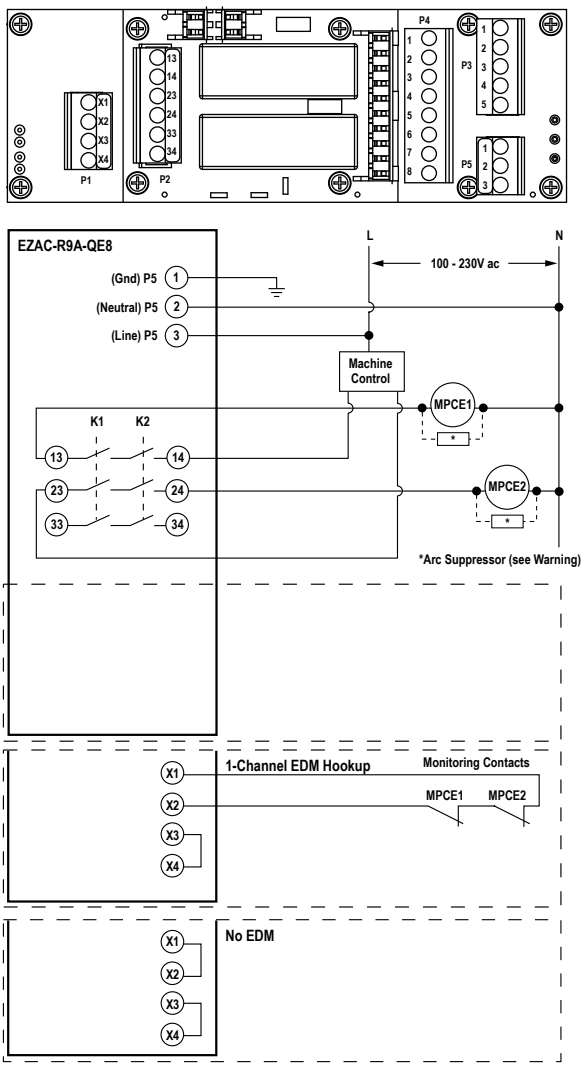

Figure 4. EZAC-R11A-QE8

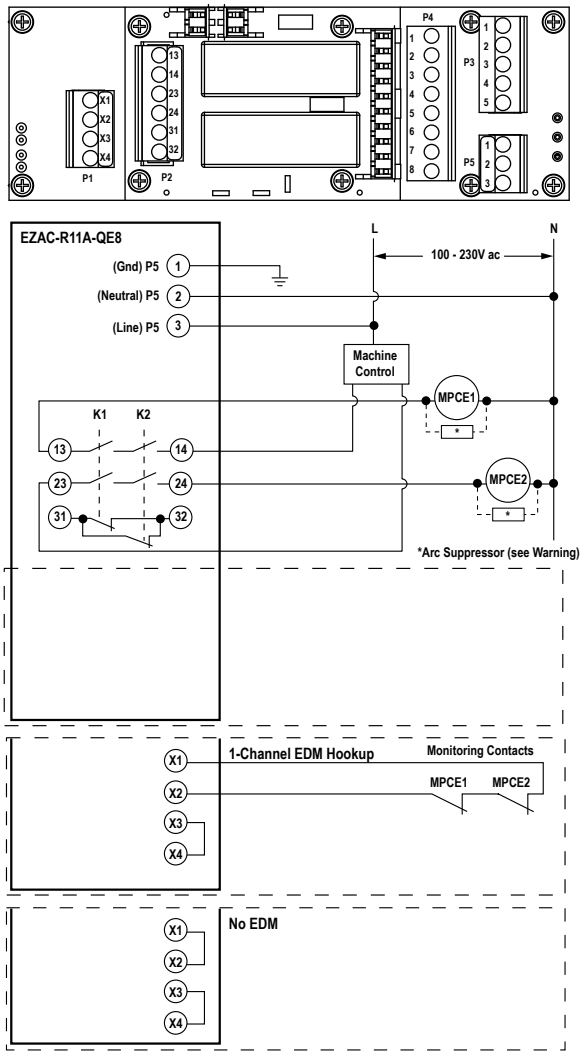

Operating Instructions

Indicators

A bicolor LED indicates the output contact status of internal relays K1 and K2.

LED Status	Power	K1 and K2	N.O. Output	N.C. Output	Light Screen
ON Green	ON	Energized	Closed	Open	Clear and reset
ON Red	ON	De-energized	Open	Closed	Blocked, latched, or locked out
OFF	No AC power	De-energized	Open	Closed	OFF

Figure 5. Features

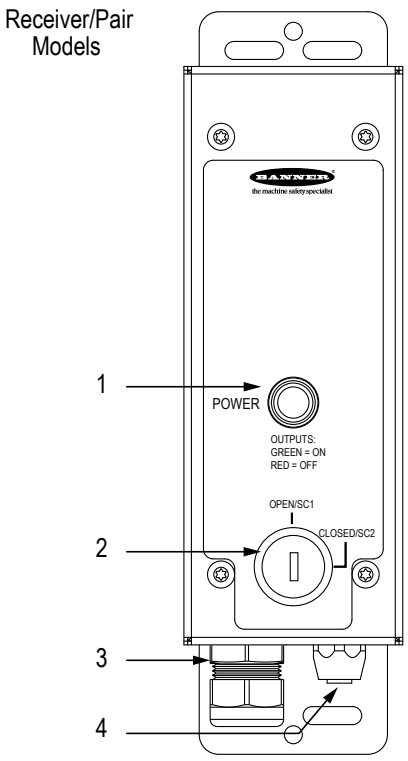

1. Green/Red LED Status Indicator
2. Key Switch
3. 1/2 inch NPT Conduit/Cable Ports (×2)
4. Receiver/Emitter Connections

Scan Code Select

The key switch on the face of the EZAC Interface Module provides a means to easily select scan code SC1 or SC2. At power-up, when the key is in the OPEN/SC1 position, scan code SC1 is selected. When the key is in the CLOSED/SC2 position, scan code SC2 is selected.

If both the EZ-SCREEN LS receiver and emitter are connected using a CSB splitter cordset, both sensors are configured for the same scan code. After the EZ-SCREEN LS power-up sequence is complete, changing the key position will not change the scan code. To change the scan code, disconnect the power, change the key position, then reapply the power. The key maybe removed and secured to prevent unauthorized tampering.

If the EZ-SCREEN LS emitter is not connected, then the wiring of the emitter must match the scan code selected by the key switch.

Note: If both the emitter and its corresponding receiver do not have the same scan code setting, the EZ-SCREEN LS receiver Diagnostic display indicates that Beam 1 is blocked by displaying "C" "H" "1". The emitter and receiver Diagnostic display also indicates the sensor scan code as "C" "1" or "C" "2" (flashes three times) during the power-up sequence.

Checkout Procedures

Banner Engineering highly recommends performing the System checkouts as described. However, a qualified person (or team) should evaluate these generic recommendations considering their specific application and determine the appropriate frequency of checkouts. This will generally be determined by a risk assessment, such as the one contained in ANSI B11.0. The result of the risk assessment will drive the frequency and content of the periodic checkout procedures and must be followed.

CAUTION:

- **Disconnect power prior to checkout**
- Dangerous voltages might be present along the module wiring barriers whenever power to the machine control elements is on.
- Before performing the initial checkout procedure, disconnect all power from the machine to be controlled. Exercise extreme caution whenever machine control power is or might be present. Always disconnect power to the machine control elements before opening the enclosure housing of the module.

At installation or replacement and at machine set up, a Designated Person [2] must test each input device connected to the safety module for proper machine shutdown response. A Designated Person must check for proper operation, physical damage, mounting (looseness), and excessive environmental contamination. This must also take place on a periodic schedule determined by the user, based on the severity of the operating environment and the frequency of switching. Adjust, clean, repair, or replace components as needed when any parts or assemblies are damaged, broken, deformed, or badly worn; or if the electrical/mechanical specifications (for the environment and operating conditions) have been exceeded. **Always test the control system for proper functioning** under machine control conditions after performing maintenance, replacing the safety module, or replacing any component(s) of the safety circuit.

Initial Checkout

1. Ensure power is removed from the modules outputs, the machine control elements, and any other circuits that could pose a hazard during the checkout.
2. Ensure the controlling safeguarding device has power removed or is in a STOP state.
3. Confirm proper connection to the controlling safeguarding device and MPCEs/MSCs according to the wiring diagram described by the wiring configurations.
4. **Apply power only to the module (not the modules outputs)**. In a typical wiring configuration, power will also be applied to the controlling safeguarding device.
5. Verify the module's power and/or status indicator LED(s) is ON (either Green or Red).
6. **Verify the controlling safeguarding device is operating correctly**, according to its instruction manual and all manufacturer's recommendations.
7. Verify all module output contacts follow exactly the operation of the safety outputs of the controlling safeguarding device.

   The module's green indicator(s) should come on and the safety output contacts should close, without action by an individual, as soon as the controlling safeguarding device outputs are ON (conducting).
8. If all these checks cannot be verified, **do not attempt to use** the safety system and the guarded machine until the defect or problem has been corrected.
9. Apply power to the modules outputs and the machine control elements.
10. Perform the Periodic Checkout Procedure.

Periodic Checkout

The functioning of the module and the controlling safeguarding device(s) connected to it must be verified on a regular periodic basis to ensure proper operation by a Designated Person (see also the machine manufacturer's recommendations).

1. With the machine running, cause the controlling safeguarding device to generate a STOP or "open-contact" state (for example, interrupt the defined area of a light curtain, or actuate an E-stop switch to open its contacts). Do not expose any individual to any hazard and during the following checks.
2. Verify the machine stops as expected.
3. Reset or otherwise cause the controlling safeguarding device to reach an ON or "closed-contact" state. If using manual reset, perform the required reset action.
4. Verify the machine does not restart.
5. Verify the machine can be restarted only by the normal means of initiation.
6. If more than one device is series-connected to the Safety Module, run the above checkout procedure individually for EACH device.

WARNING:
- **Do not use the system until the checkouts are verified**
- Attempts to use the guarded/controlled machine before these checks are verified could result in serious injury or death.
- If all these checks cannot be verified, do not attempt to use the safety system that includes the Banner device and the guarded/controlled machine until the defect or problem has been corrected.

Specifications

Input Voltage and Current
100 to 230 V AC ±15%
Input current:
Typical 0.37 A at 100 V AC in
Typical 0.23 A at 200 V AC in
Inrush current:
Typical 15 A at 100 V AC in (5 ms maximum)
Typical 30 A at 200 V AC in (5 ms maximum)

Supply Protection Circuitry
Protected against transient voltages

Output Voltage and Current
24 V DC at 0.7 A (16.8 W)
SELV; capable of buffering 20 ms power interruptions

Input Channels
24 V DC ± 15%; 40 mA per channel (pin 4 and pin 5)

Pollution Degree
2

Overvoltage Category
Output relay contact voltage 1 V to 150 V AC/DC: Category III
Output relay contact voltage 151 V to 250 V AC/DC: Category II (Category III, if appropriate overvoltage reduction is provided, as described.)

[2] A Designated Person is identified in writing by the employer as being appropriately trained to perform a specified checkout procedure.

Output Configuration

Each normally open output channel is a series connection of contacts from two forced-guided (positive-guided) relays, K1- K2. The normally closed contact is a parallel connection of contacts from K1-K2.

Model EZAC-R9A-QE8:	3 normally open (N.O.) output channels
Model EZAC-R11A-QE8:	2 normally open (N.O.) output channels and 1 normally closed (N.C.) auxiliary output channel

Output Configuration - High Current Rating

High Current Rating: If higher loads must be switched through one or more of the contacts, the minimum and maximum values of the contact(s) changes to:

	Minimum	Maximum
Voltage	15 V AC/DC	250 V AC/DC
Current	250 mA	8 A
Power	3.75 W (3.75 VA)	200 W (2000 VA)

Output Configuration - Low Current Rating

Low Current Rating: The 5 µm gold-plated contacts allow the switching of low current/low voltage. In these low-power applications, multiple contacts can also be switched in series (that is, “dry switching”). Contact ratings to preserve gold plating:

	Minimum	Maximum
Voltage	1 V AC/DC	60 V AC/DC
Current	5 mA	300 mA
Power	5 mW (5 mVA)	7 W (7 VA)

Output Configuration - Life Expectancy

Mechanical Life: > 50,000,000 operations
Electrical Life: > 150,000 operations (at 230 V AC, 8 A, cos ϕ = 1, 1 sec ON, 1 sec OFF)

Note: Transient suppression is recommended when switching inductive loads. Install suppressors across load. Never install suppressors across output contacts.

Output Response Time

10 ms (max.)

B10d Values

Voltage	Current	B10d
230 V AC	5 A	150,000
230 V AC	2 A	390,000
230 V AC	1 A	1,000,000
24 V DC	≤ 2 A	10,000,000

Status Indicators

One bicolor (red/green) LED indicator on module cover indicates the power and output status of internal relays K1 and K2

Mounting

Module provides flanges for screw mounting; can be mounted directly to AC Interface Modules receiver or emitter housing.

Construction

Welded steel box with yellow polyester powder paint finish

Vibration Resistance

10 to 50 Hz at 0.35 mm displacement per IEC 68-2-6

Operating Conditions

0 °C to +50 °C (+32 °F to +122 °F)
90% at +50 °C maximum relative humidity (non-condensing)

Environmental Rating

IP65

Certifications

UL LISTED

Dimensions

All measurements are listed in millimeters [inches], unless noted otherwise.

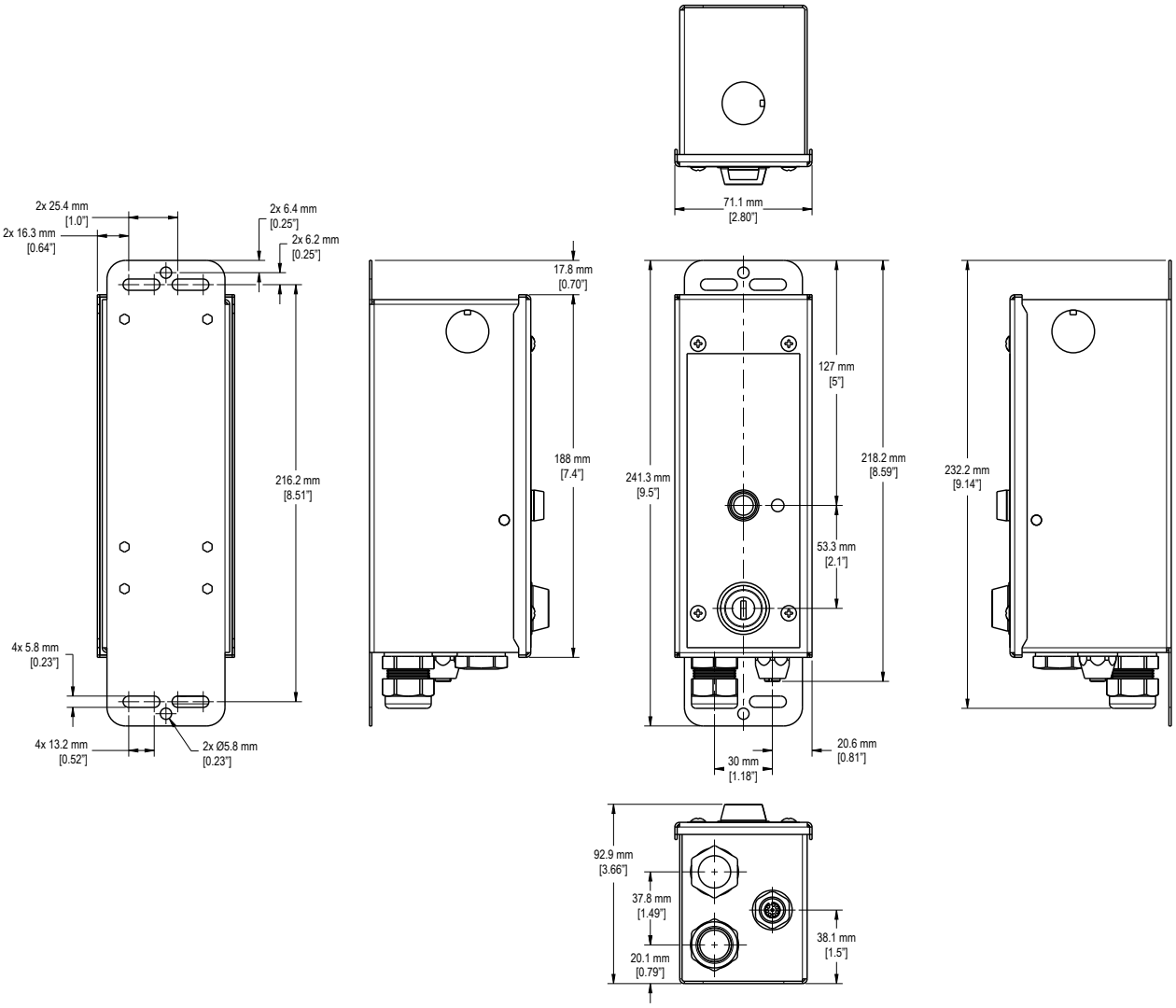

Standards and Regulations

The list of standards below is included as a convenience for users of this Banner device. Inclusion of the standards below does not imply that the device complies specifically with any standard, other than those specified in the Specifications section of this manual.

U.S. Application Standards

ANSI B11.0 Safety of Machinery, General Requirements, and Risk Assessment

ANSI B11.19 Performance Criteria for Safeguarding

NFPA 79 Electrical Standard for Industrial Machinery

International/European Standards

EN ISO 12100 Safety of Machinery – General Principles for Design — Risk Assessment and Risk Reduction

EN 60204-1 Electrical Equipment of Machines Part 1: General Requirements

IEC 61508 Functional Safety of Electrical/Electronic/Programmable Electronic Safety-Related Systems

IEC 62061 Functional Safety of Safety-Related Electrical, Electronic and Programmable Control Systems

EN ISO 13849-1 Safety-Related Parts of Control Systems

IEC 60529 Degrees of Protection Provided by Enclosures

Accessories

Cordsets

8-Pin Threaded M12 Splitter Cordsets—Flat Junction			
Model	**Trunk (Male)**	**Branches (Female)**	**Pinout**
CSB-M1280M1280	No trunk	No branches	Male 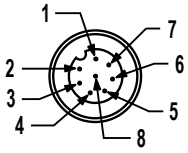 Female 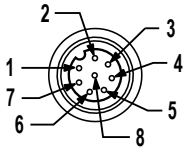 1 = Brown 2 = Or/Bk 3 = Orange 4 = White 5 = Black 6 = Blue 7 = Gn/Ye 8 = Violet
CSB-M1281M1281	0.3 m (1 ft)	2 x 0.3 m (1 ft)	
CSB-M1288M1281	2.44 m (8 ft)		
CSB-M12815M1281	4.57 m (15 ft)		
CSB-M12825M1281	7.62 m (25 ft)		
CSB-UNT825M1281	7.62 m (25 ft) Unterminated		
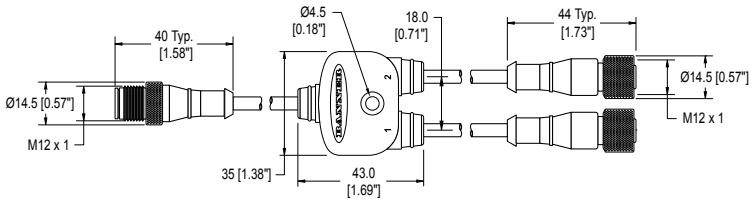			

8-Pin Threaded M12 Cordsets—Double Ended					
Model (8-pin/8-pin) [3]	**Length**	**Style**	**Dimensions**	**Pinout**	
DEE2R-81D	0.3 m (1 ft)	Female Straight/ Male Straight	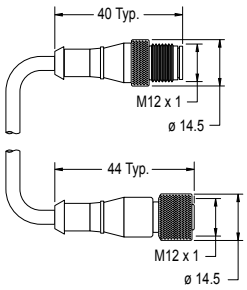	Female 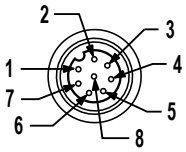 Male 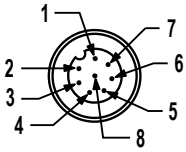	
DEE2R-82D	0.91 m (3 ft)				
DEE2R-88D	2.44 m (8 ft)				
DEE2R-815D	4.57 m (15 ft)				
DEE2R-825D	7.62 m (25 ft)				
DEE2R-850D	15.24 m (50 ft)				
DEE2R-875D	22.86 m (75 ft)				
DEE2R-8100D	30.48 m (100 ft)			1 = White 2 = Brown 3 = Green 4 = Yellow	5 = Gray 6 = Pink 7 = Blue 8 = Red

Product Support and Maintenance

Repairs

Do not attempt any repairs to this Banner device, other than replacing the component(s) listed in this document with original Banner replacement components.

See Replacement Parts on p. 12 for a list of replaceable components.

Other than these components, this Banner device contains no field-replaceable components. For other problems, contact Banner Engineering for troubleshooting of this device. If the device is determined to be defective by a Banner Applications Engineer, they will advise you of Banner's RMA (Return Merchandise Authorization) procedure.

[3] Standard cordsets are yellow PVC with black overmold. For black PVC and overmold, add the suffix "**B**" to the model number (example, **DEE2R-81DB**)

Important: If instructed to return the device, pack it with care. Damage that occurs in return shipping is not covered by warranty.

WARNING:

- **Do not abuse the module after failure**—If an internal fault has occurred and the module will not reset, do not tap, strike, or otherwise attempt to correct the fault with a physical impact to the housing.
- Failure to follow these instructions could result in serious injury or death.
- An internal relay might have failed in such a manner that its replacement is required. If the module is not immediately replaced or repaired, multiple simultaneous failures might accumulate such that the safety function cannot be guaranteed.

Replacement Parts

Model	Description
MGA-K-1	Replacement key for key switch
EZAC-RM-1	Replacement relay board (3 NO contacts)
EZAC-RM-2	Replacement relay board (2 NO/ 1 NC Contact) [4]

Banner Engineering Corp. Limited Warranty

Banner Engineering Corp. warrants its products to be free from defects in material and workmanship for one year following the date of shipment. Banner Engineering Corp. will repair or replace, free of charge, any product of its manufacture which, at the time it is returned to the factory, is found to have been defective during the warranty period. This warranty does not cover damage or liability for misuse, abuse, or the improper application or installation of the Banner product.

THIS LIMITED WARRANTY IS EXCLUSIVE AND IN LIEU OF ALL OTHER WARRANTIES WHETHER EXPRESS OR IMPLIED (INCLUDING, WITHOUT LIMITATION, ANY WARRANTY OF MERCHANTABILITY OR FITNESS FOR A PARTICULAR PURPOSE), AND WHETHER ARISING UNDER COURSE OF PERFORMANCE, COURSE OF DEALING OR TRADE USAGE.

This Warranty is exclusive and limited to repair or, at the discretion of Banner Engineering Corp., replacement. **IN NO EVENT SHALL BANNER ENGINEERING CORP. BE LIABLE TO BUYER OR ANY OTHER PERSON OR ENTITY FOR ANY EXTRA COSTS, EXPENSES, LOSSES, LOSS OF PROFITS, OR ANY INCIDENTAL, CONSEQUENTIAL OR SPECIAL DAMAGES RESULTING FROM ANY PRODUCT DEFECT OR FROM THE USE OR INABILITY TO USE THE PRODUCT, WHETHER ARISING IN CONTRACT OR WARRANTY, STATUTE, TORT, STRICT LIABILITY, NEGLIGENCE, OR OTHERWISE.**

Banner Engineering Corp. reserves the right to change, modify or improve the design of the product without assuming any obligations or liabilities relating to any product previously manufactured by Banner Engineering Corp. Any misuse, abuse, or improper application or installation of this product or use of the product for personal protection applications when the product is identified as not intended for such purposes will void the product warranty. Any modifications to this product without prior express approval by Banner Engineering Corp will void the product warranties. All specifications published in this document are subject to change; Banner reserves the right to modify product specifications or update documentation at any time. Specifications and product information in English supersede that which is provided in any other language. For the most recent version of any documentation, refer to: www.bannerengineering.com.

For patent information, see www.bannerengineering.com/patents.

[4] RM-1 is for EZAC-R9A-QE8. RM-2 is for EZAC-R11A-QE8.

© Banner Engineering Corp. All rights reserved